Owner's Manual & Assembly Guide

Model No. W50' x L 40' x H17
Strong Container Shelter

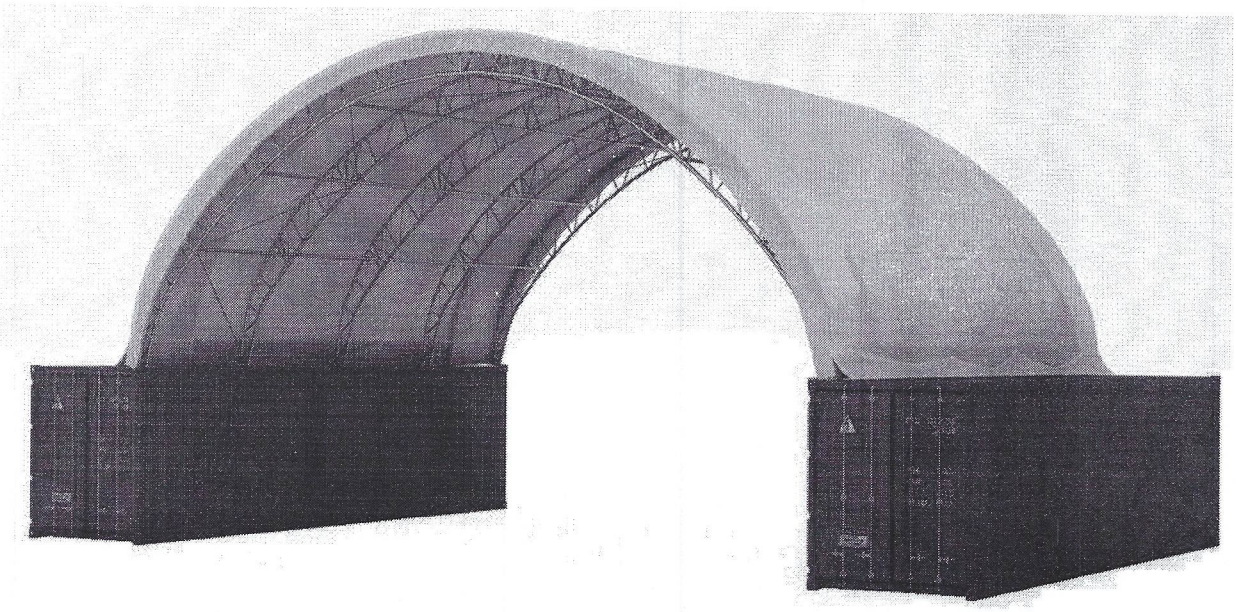

*** See Inside for Detailed Safety Information.**

Gloves must be worn
at all times to reduce risk of iniury!

SAFETY & MAINTENANCE

Safety precautions MUST be followed at all times throughout the construction of your building!

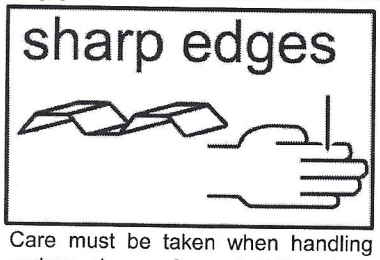

Care must be taken when handling various pieces of your building since many contain sharp edges. Please wear work gloves, eye protection and long sleeves when assembling or performing any maintenance on your building.



Practice caution with the tools being used in the assembly of this building. Be especially familiar with the operation of all power tools.



Do NOT attempt to assemble your building on a windy day. The large panels can catch the wind like a "sail", causing them to be whipped around making construction difficult and unsafe.

Do NOT attempt to assemble your building before double checking that you have all the parts indicated on the parts list as well as all hardware. Any building left partially assembled may be seriously damaged by even lightwinds.

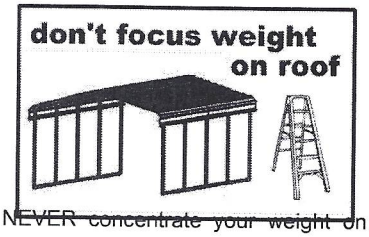

NEVER concentrate your weight on the roof of the building. When using a step ladder make sure that it is fully open and on even ground before climbing on it.



Keep children and pets away from the worksite during construction and until the building is completely assembled. This will help avoid distractions and any accidents which may occur.

IMPORTANT NOTE ON ANCHORING

- Your building MUST be anchored to prevent wind damage. See anchoring page for more info.
- You must also have a temporary anchoring system in place in case you need to take a break from assembly.

Exterior Care:

For a long lasting finish, clean and wax the exterior surface. We recommend washing with a mild soap solution. DO NOT use power washing to clean your shed. Using a spray automotive type wax periodically on the exterior is highly recommended if you are in a high humidity or coastal climate region.

Combustibles and corrosives must be stored in air tight containers designed for chemical and/or combustible storage. Corrosive chemicals such as fertilizers, pesticides and herbicides should be cleaned off the interior and exterior surfaces immediately. Rust caused by chemical damage is not covered by the warranty.

Rust protection precautions may help to stop rust from developing, or stop it quickly as soon as it appears.

- Avoid nicking or scraping the coating surface, inside and out.
- Keep roof and base perimeter free of debris and leaves which may accumulate and retain moisture. These can do double damage since they give off acid as they decay.
- Touch up scrapes or nicks and any area of visible rust as soon as possible. Make sure the surface is free of moisture, oils, dirt or grime and then apply an even film of high quality touch-up paint.
- Various paint manufacturers provide products for rust treatment and coverage. If surface rust does appear on your shed we recommend treating those areas as soon as possible, following the paint supplier of your choice instructions.
- Our customer service department can provide the paint tinting formula for matching the color of your shed.
- ***Roof:*** Keep the roof clear of leaves and snow. Heavy amounts of snow on the roof can damage the building making it unsafe to enter.

Fasteners: Regularly check fasteners and retighten as necessary.

General: Wash off inked part numbers on coated panels with soap and water.

Please note, Manufacturer cannot be held responsible for any consequences due to buildings that are not installed per these instructions, or for damage due to weather conditions or acts of God.

Keep these assembly instructions and owner's manual for future reference.

ASSEMBLY TIPS & TOOLS

Watch the Weather Closely: Be sure the day you choose to install your building is dry and calm. Do ***NOT*** attempt to assemble your building on a windy day. Be careful on wet or muddy ground.

Use Teamwork: Two or more people are required to assemble your building. One person can hold the parts or panels in place while the other person fastens them together and handles the tools. This makes the process of assembling your building faster and safer.

Tools and Materials: Here is a list of some basic tools and materials you will need to assemble your building. Decide which method of anchoring and the type of base you will use to make a complete list of the materials you will need.

WHAT YOU NEED

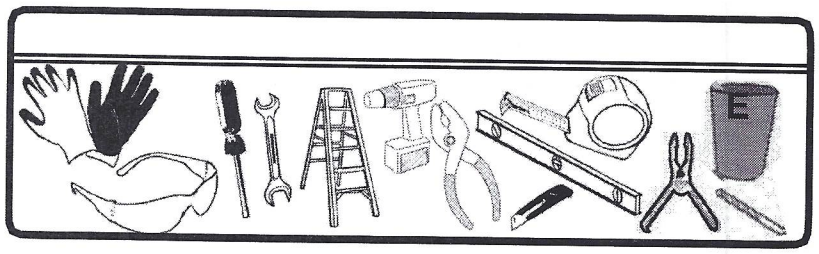

- **Work Gloves**
- **Safety Glasses**
- **Nut Driver or Wrench**
- **Step Ladder 8'**
- **Power Drill (Cordless, Variable Speed)**
- **Pliers**
- **Utility Knife or Scissors**
- **Carpenter's Level**
- **Tape Measure**
- **Clamp**
- **Grout (Asphalt Base)**
- **7/8" x 13" Masonry Bit (Asphalt Base)**
- **1/2" x 8" Masonry Bit (Concrete Base)**

RECOMMENDED TIME SAVERS

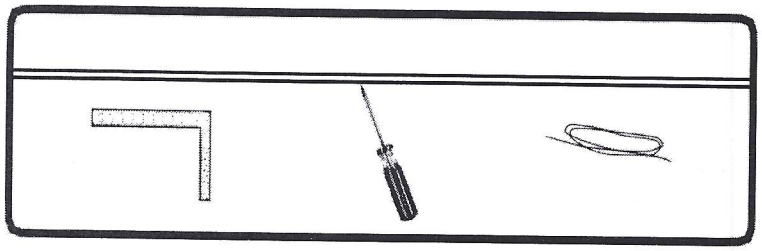

- *Square*
- *String (for squaring the frame)*
- *Awl (to align holes)*

How to Select and Prepare Your Building Site: Before you start to assemble your building, you will want to decide on a good location. The best location is a level area with good drainage.

- Allow enough working space so it is not difficult to move parts into position for assembly. Also, there needs to be enough space outside the building to be able to fasten the panel screws from the outside.
- Before assembling any parts, your base should be constructed and an anchoring system should be ready to use.

PLEASE READ AND UNDERSTAND INSTRUCTIONS COMPLETELY BEFORE ASSEMBLY. LAY OUT FRAME PARTS AS BELOW:

No.	Description		QTY
1	Middle Roof Bent Tube Outer tube: Φ 60*2800mm Inner tube: Φ 60*2667mm	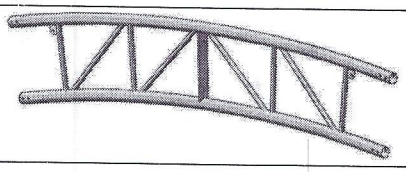	5
2	Side Upper Bent Tube Φ 60*2800mm	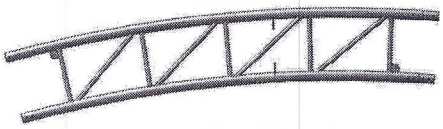	10
3	Side Middle Bent Tube Φ 60*2800mm		10
4	Side Lower Bent Tube Outer tube: Φ 60*2800mm Inner tube: Φ 60*2760mm	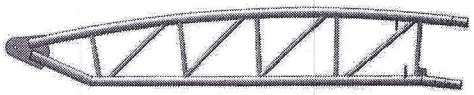	10
5	Supporting Webbing between the arch Φ 25*605mm	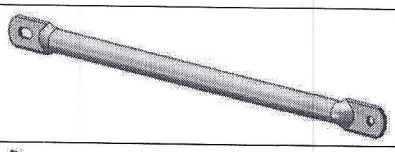	30
6	Double Trussed Purlin Φ 48*3052mm	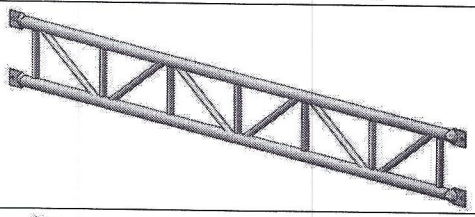	4
7	Single Truss Purlin Φ 48*3052mm	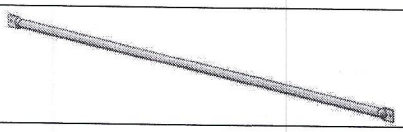	24
8	Diagonal Support Tube For purlin Φ 40*630mm		48
9	Diagonal Support Female Tube Φ 40*1030mm	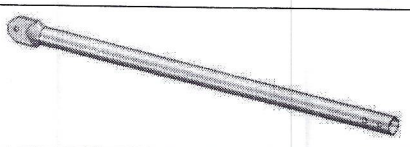	16
10	Diagonal Support Male Tube Φ 40*2630mm	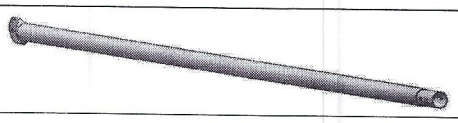	16

11	Φ60 Clips		32
12	Φ48 Clips		48
13	Tension Tube For Roof Cover Φ60*3000mm		8
13A	Tension Tube For Roof Cover Φ60*320mm		2
14	Clamping Piece	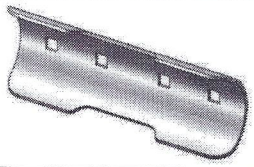	120
15	PVC Protective Cover	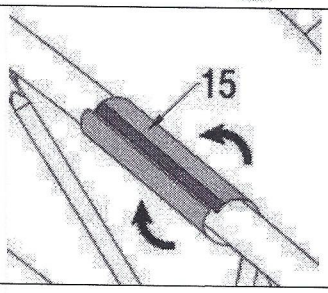	30
16	U-steel For Part No.U40	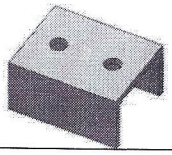	8
L1	Left Corner Base Plate	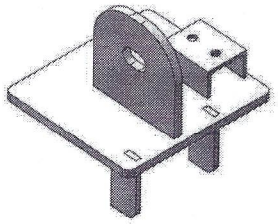	2
R1	Right Corner Base Plate	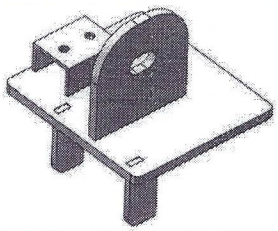	2
L2	Left Base Plate	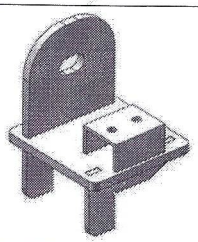	3

R2	Right Base Plate	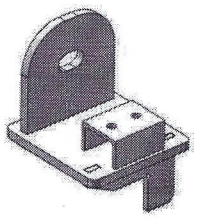	3
17	Φ32mm PPR Tube		16
18	Roof Cover		1
U2	Small Ratchet With Straps	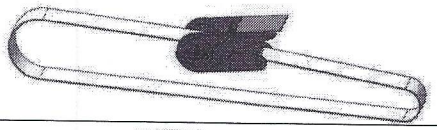	9
U9	Big Ratchet Straps	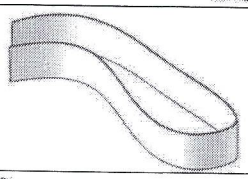	10
U15	Carriage Bolt M8x60mm	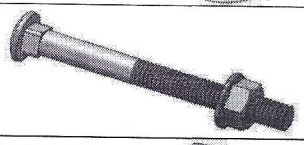	32
U40	Ratchet Straps Lashing Winch	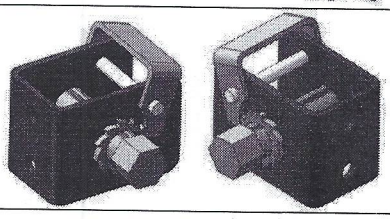	9Pairs /18pcs
U41	Bolt M20x60mm	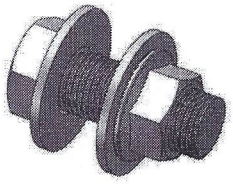	10
U42	Carriage Bolt M8x80mm	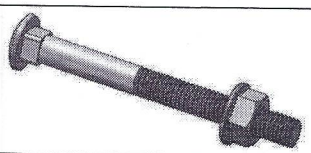	240
U23	Bolt M10x30mm	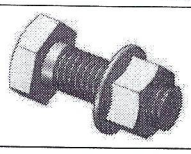	166
U43	Black Plastic Cap		4

SPECIFICATION

Width:15m Length: 12 m Height:5.2m
3mArch Spacing

NOTE:FRME EXTENSION KIT

This is the base frame dimension. Your model may have more or less middle ribs than shown in the illustration . You will receive more extra ribs for every extra arch spacing of building length that you purchase. The basic frame assembly will remain the same. The cover will be the correct size for the length of the building.

1.Base Plate Installation:

Before building your shelter, you should choose a flat area on your property and plot your shelter.
The two containers inner distance is 14930mm.
A.Stake out the area for the shelter in the desired spot. The width of the area should be at least equal to the width of the shelter and the length should be equal to the length of the shelter.
B.**Measure diagonally from centre to centre of the tubes.** These measurements should be the same as below Figure 1 shows.**Base plates (L1/R1/L2/R2)must be fully welded inside and outside. Part no.16 doesn't need to be welded in advance.The welding position can be determined according to the strap position of the roof cover when the roof cover is installed.**

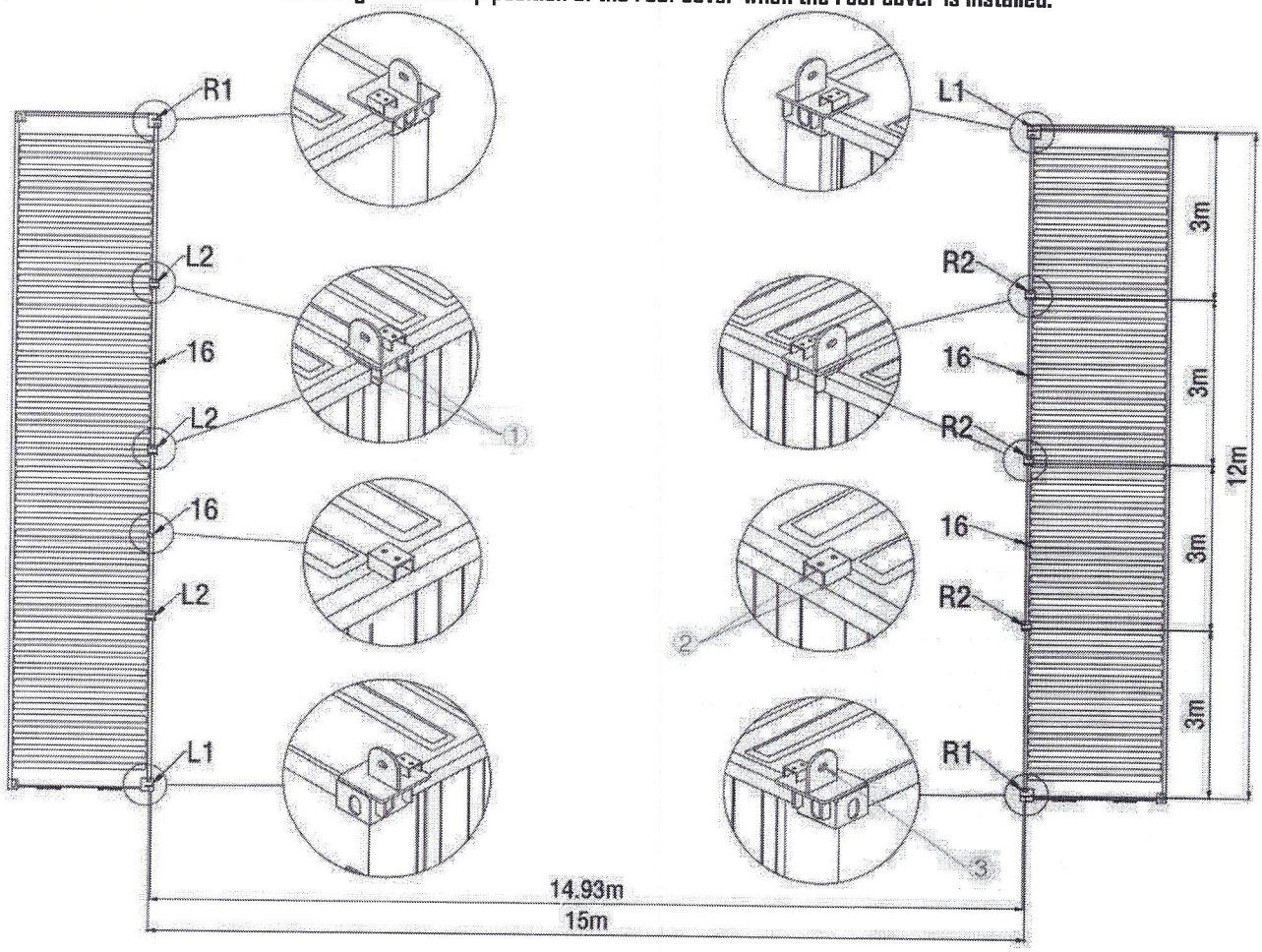

Figure 1

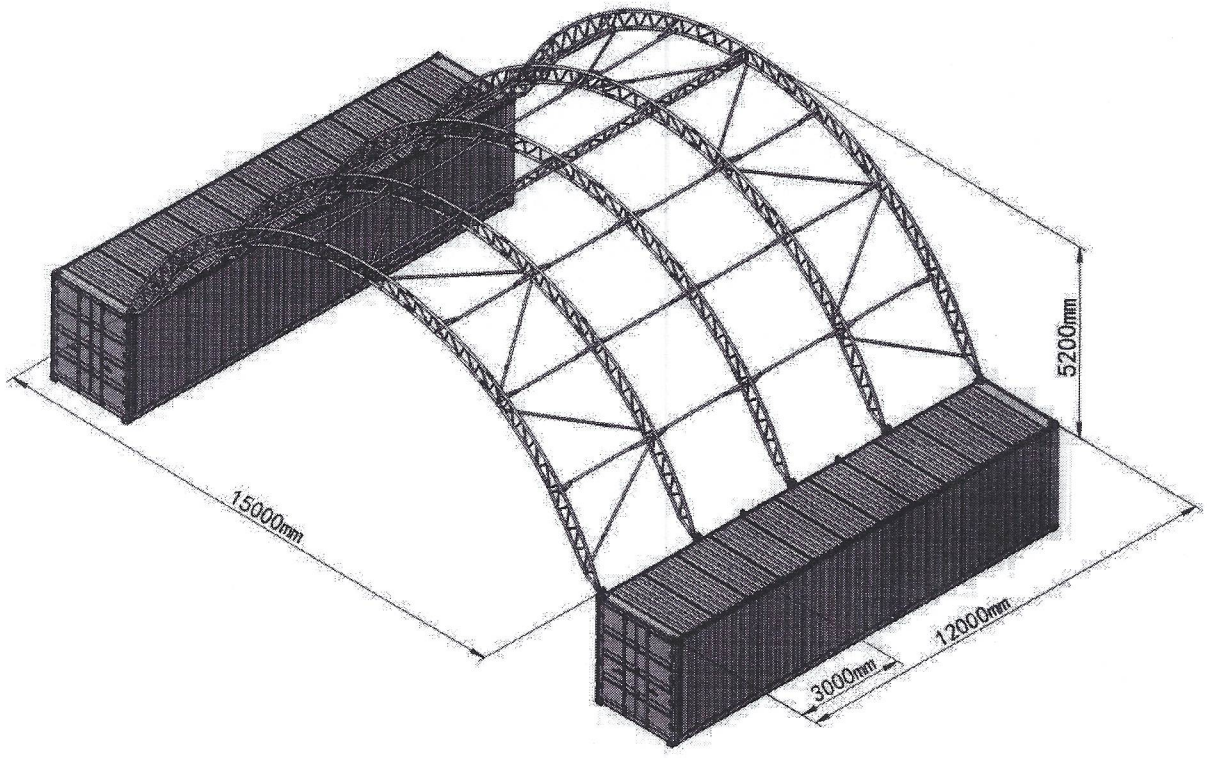

⚠ WARNING

SAFETY TIPS

Always wear proper safety equipment such as safety glasses and gloves

2. ASSEMBLE FRAME

Assemble the frame as below figures shown. Securely fasten all of the joints with the hardware indicated.

2.1 As Figure 2&3 shown to find one Roof Bent Tube, Middle Bent Tubes, Lower Bent Tubes and assemble these arches with Carriage bolt M8x80mm(Part no.U42) and Clamping Piece(Part no.14) to make the first arch group.

DO NOT install the screw on the top of the truss where the fabric will rest.

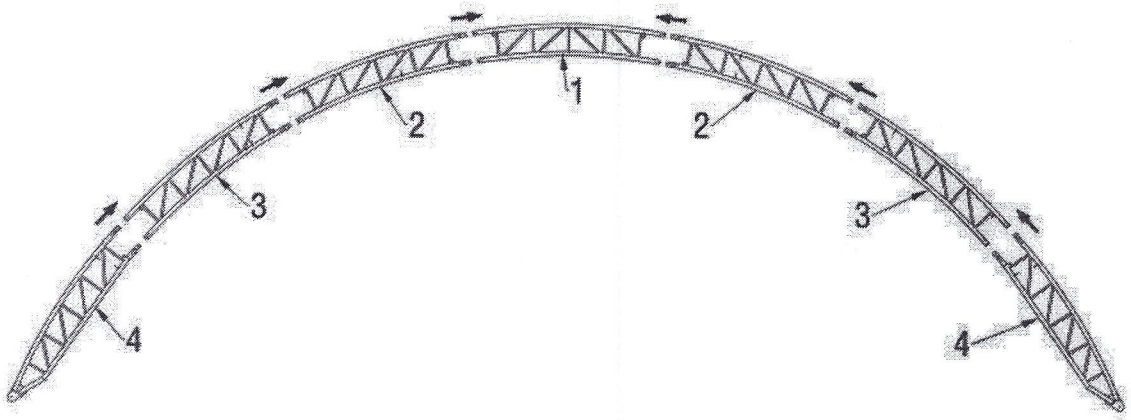

Figure 2

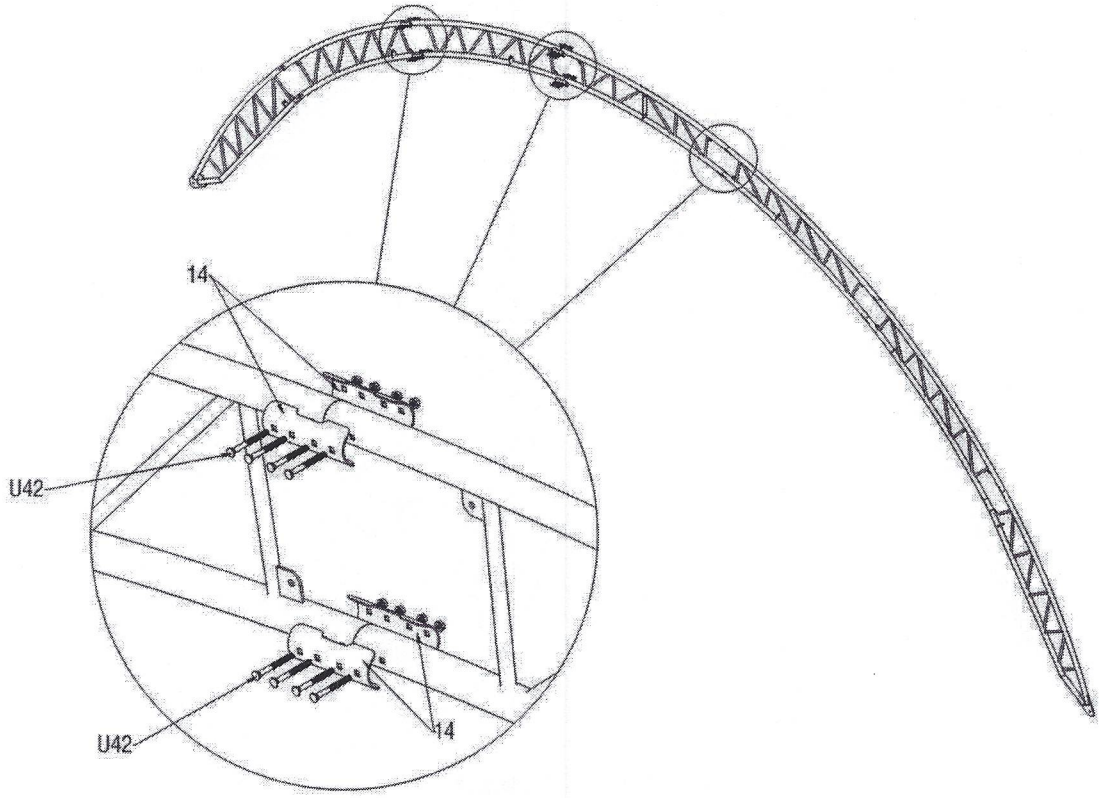

Figure 3

2.2 As Figure 4&5 shows,install the Supporting Webbing between the arch(No.5)by using Bolt M10x30mm(No.U23).Then put the PVC protective cover on the outer of connection of the arch to protect the roof cover from scratched by the outer joint.

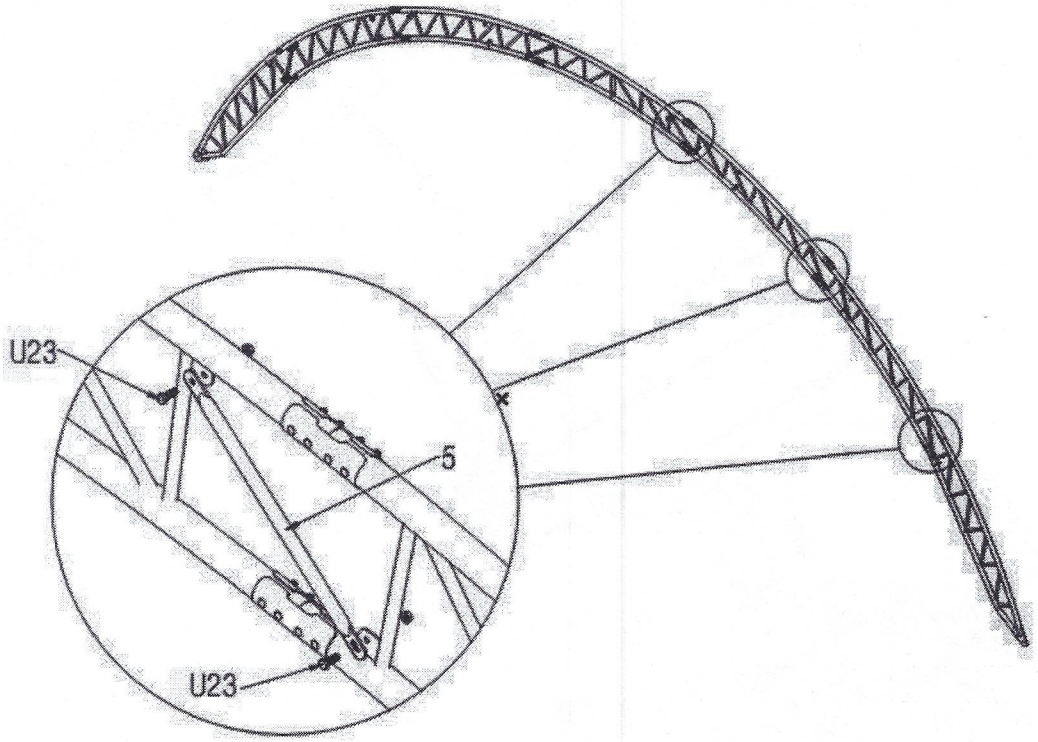

Figure 4

2.4. After finishing installing the first two arches with the base plates,install middle double trussed purlin (Part no.6)between two arches by using bolt M10x30mm(Part no.U23)and single truss purlin (Part no.7)using between two arches by using bolt M10x30mm(Part no.U23).There are one pcxDouble trussed purlin and 6pcsxsingle truss pulrins between arches. After that, install the third arch, connect the third arch with the base plate as mentioned earlier, connect all remaining purlins by turns.

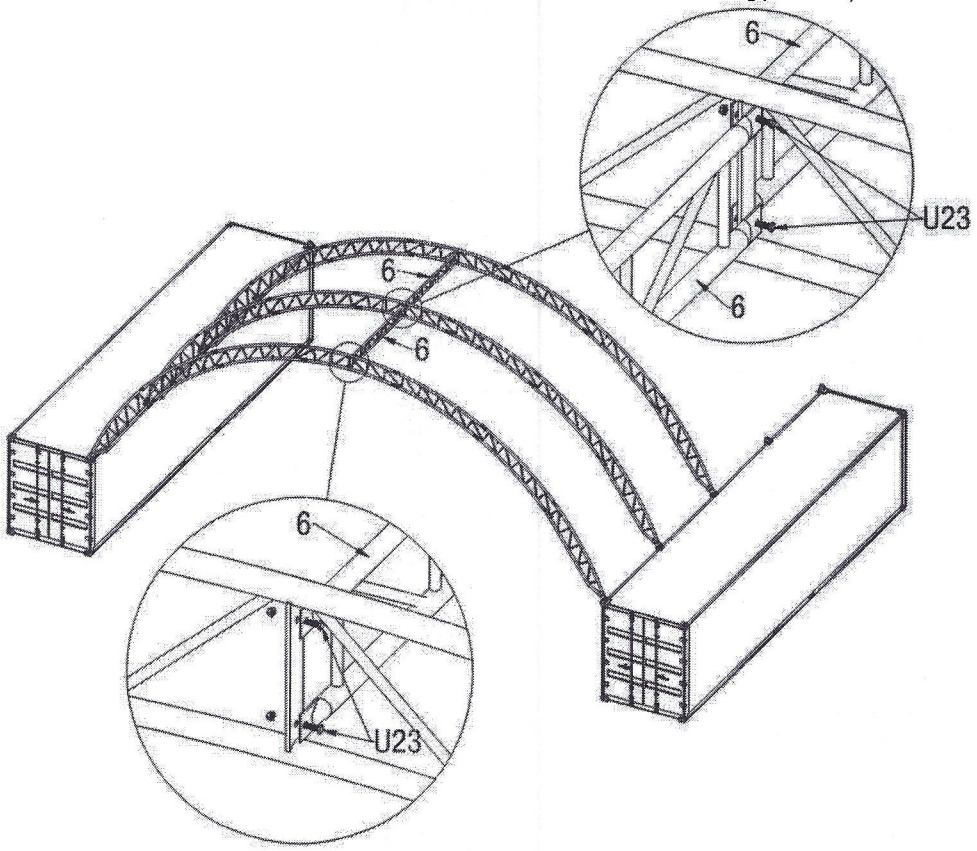

Figure 7

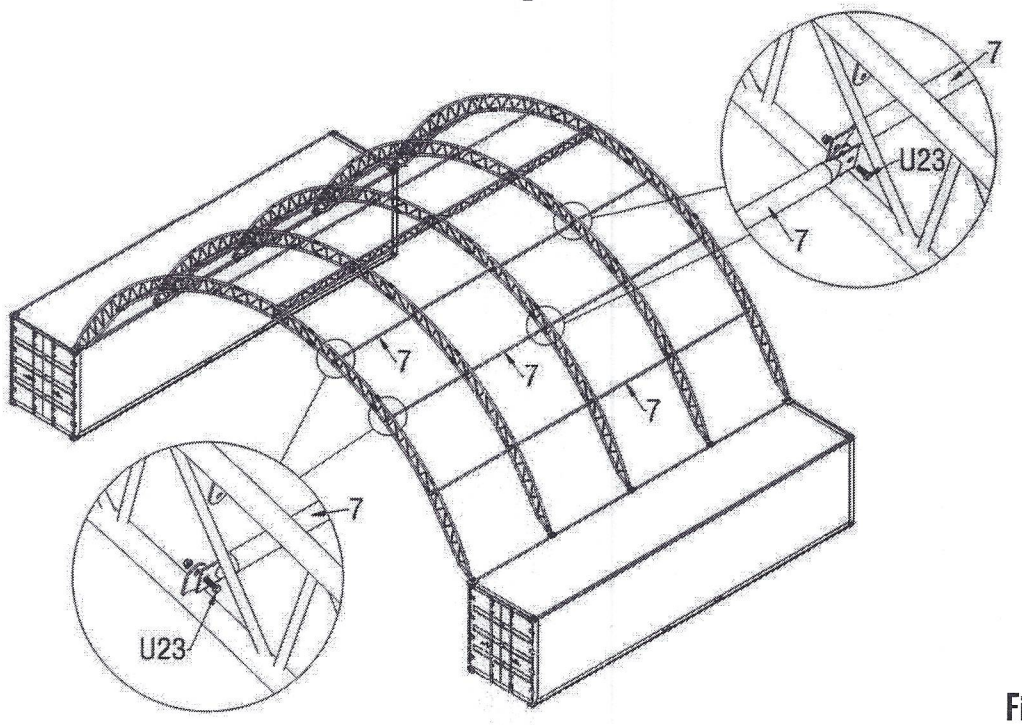

Figure 8

⚠WARNING

THINK SAFETY, EVERYDAY!

2.5. Connect the Diagonal Support Tube For purlin(Part no.8) to the arch and purlin (Part no.7) by bolt M10x30mm(Part no.U23) and clips(Part no.12) as below Figure 9 shows.

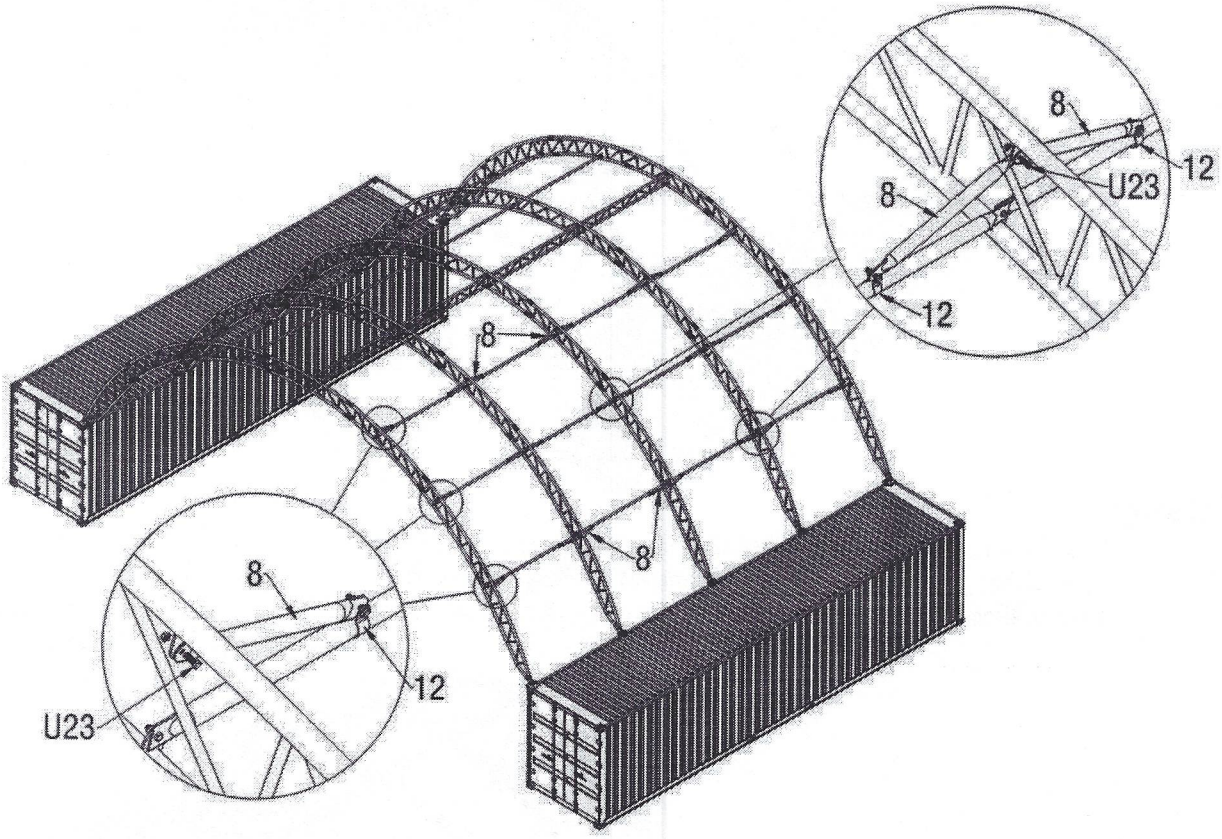

Figure 9

2.6. Connect the Diagonal Support tubes(Part no.9 and no.10) by using Carriage bolt M8x60mm(Part no.U15),then install the diagonal support tubes to the arches by using clips(Part no.11) as below Figure 10 shows.There are total two groups x diagonal support tubes as the figure shows.

3. INSTALLING THE COVER ON THE FRAME

NOTE: DO NOT install the cover onto the frame of your building in high wind conditions. A slight breeze is the most advantageous for cover installation. To take advantage of the breeze, pull the cover up over the arches with breeze blowing in the cover like a sail filled with air.

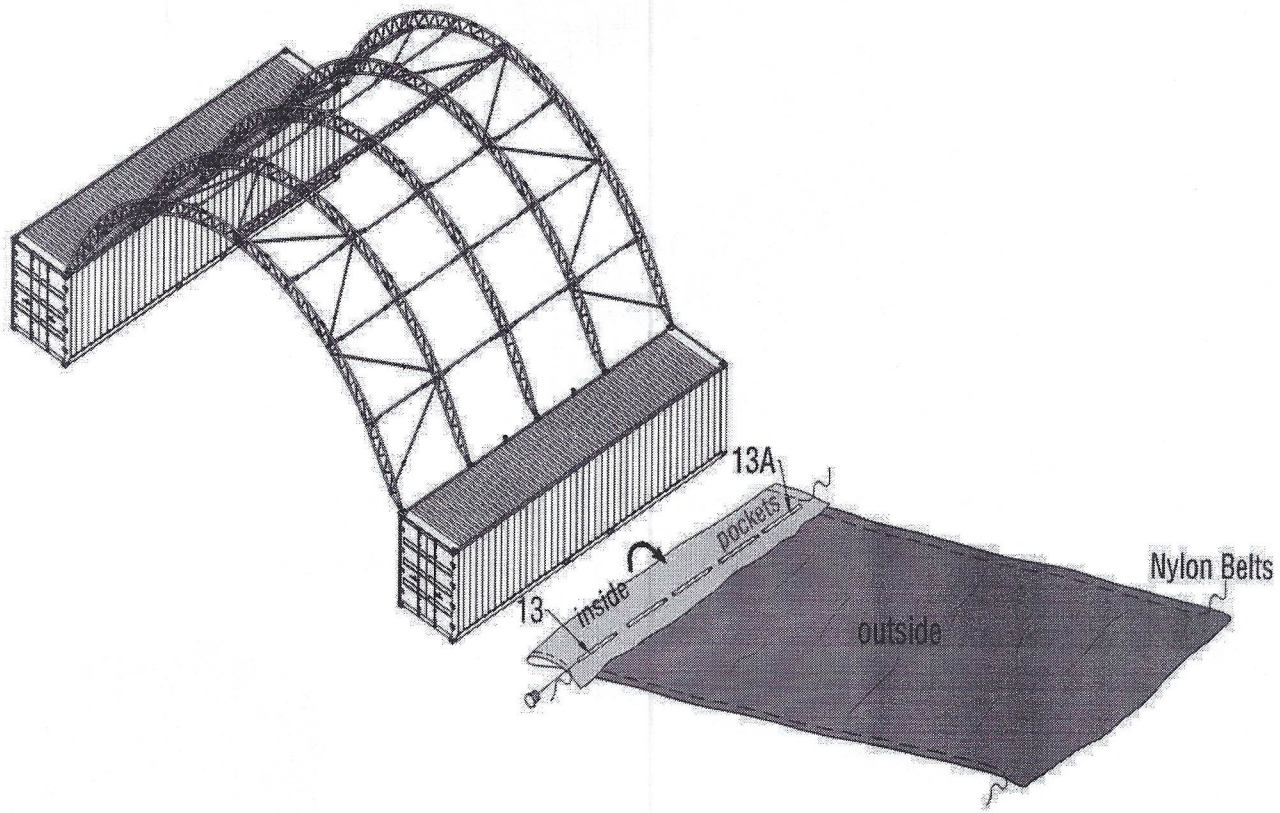

Figure 12

1. Assemble Tension Tube (Part no.13 and 13A)for Roof Cover before installing the cover.Put the black plastic cap(Part no.U43)into the end of tension tube.
2. Roll out the roof cover on a ground sheet. Align the cover evenly to each end of the frame.

Note: Be sure doing not pull over the end of the roof cover.

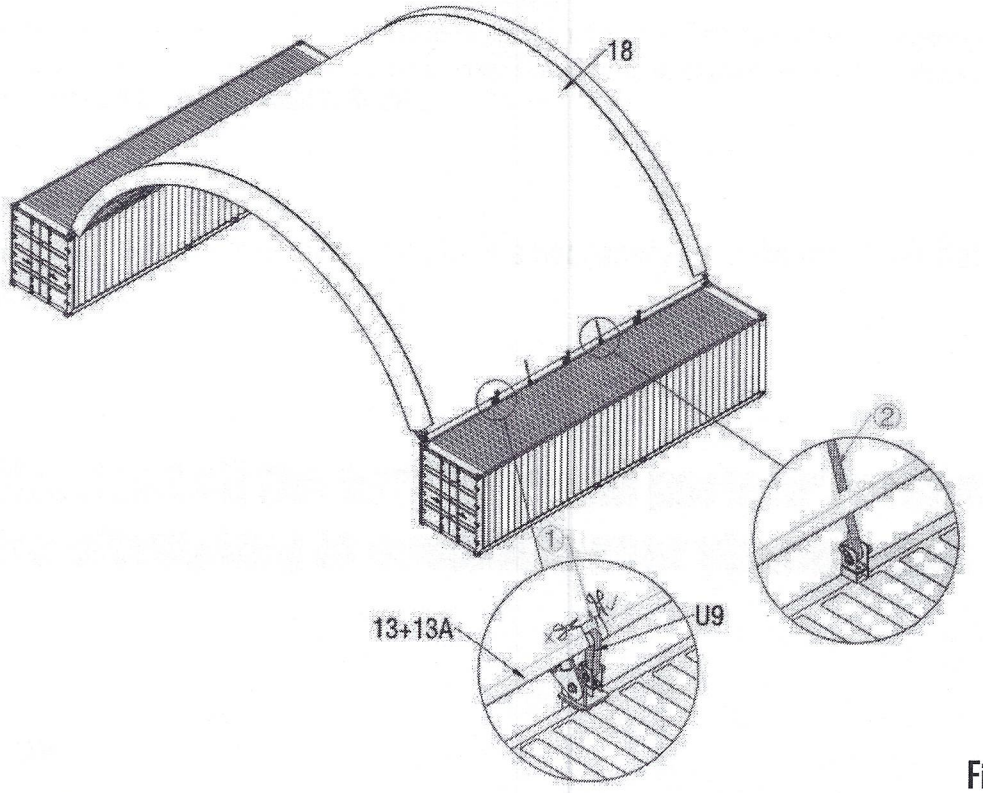

Figure 15

4. Insert the PPR Tube (Part no.17)into the end of roof cover by using small ratchet with straps(Part no.U2)to the arch as Figure 14 shows.Then cut the lower tension cover pocket according to the base plate location(**Please note the Cutting direction,the cutting should be Perpendicular to the cover pocket as the Figure 14 shows).** Insert the nylon straps (Part no.U9)into the winch ,drive the ratchet straps lashing winch forth and back and then roof cover is tightened.The roof cover tightening should be properly tightened and not too tight.

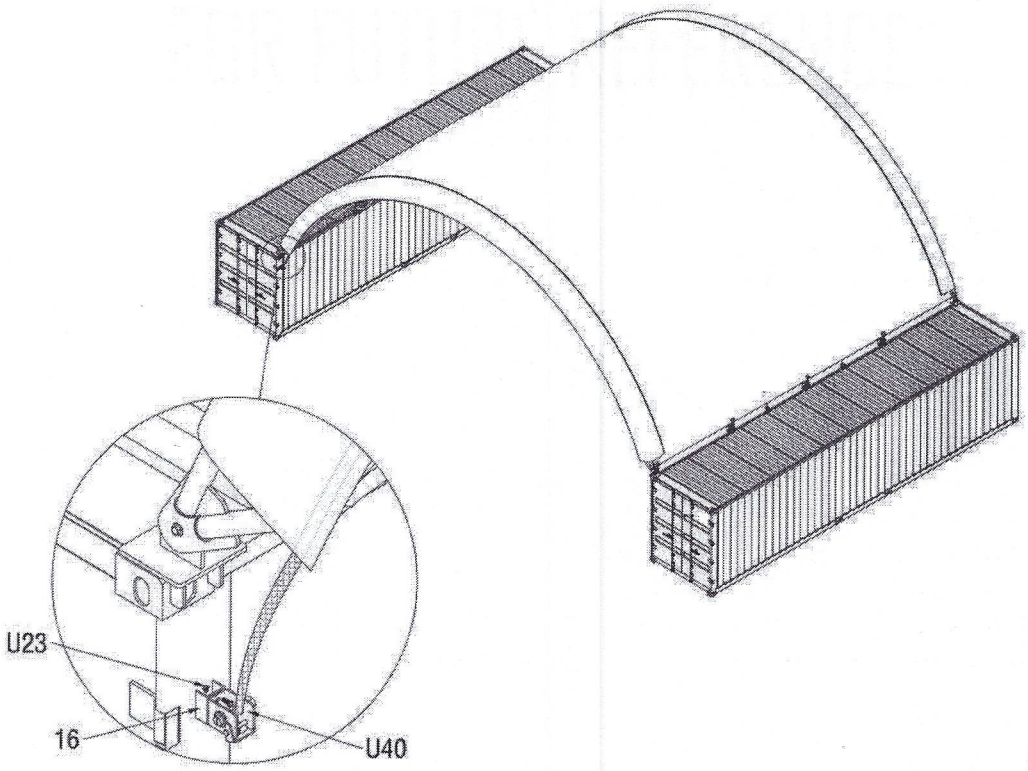

Figure 16