SHELTER

ASSEMBLY MANUAL

Model-306020DP

Size: W9.15xL18.3mxH6.1m

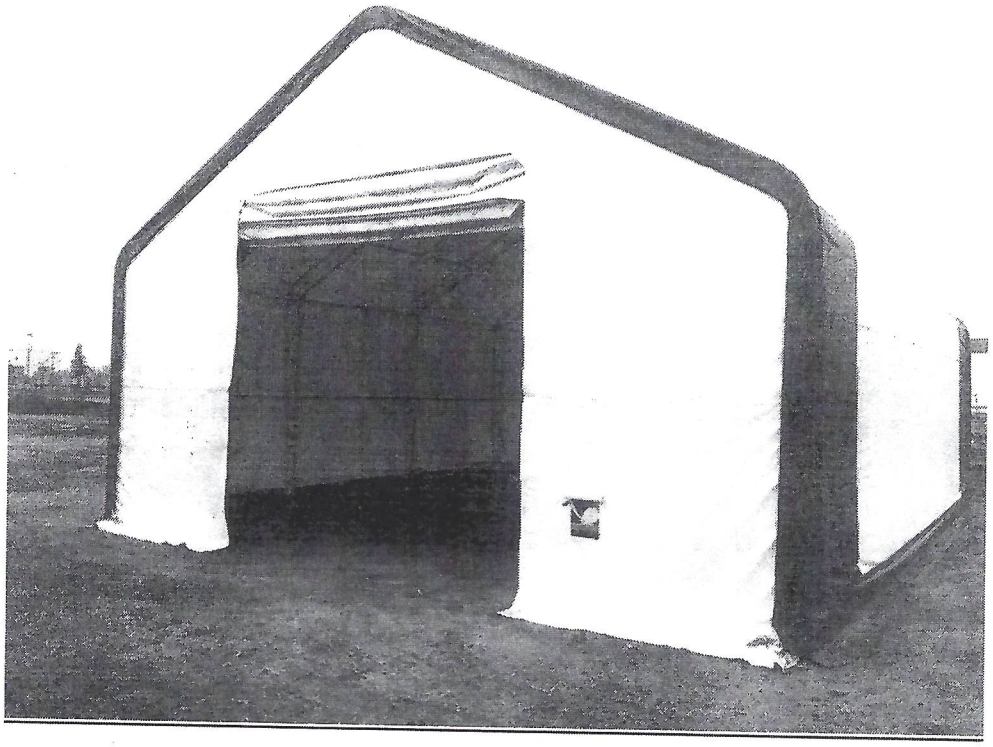

SPECIFICATION

W30' x L60' x H20'

Width: 9.15m Length: 18.3m Height: 6.1m

IMPORTANT-----READ MANUAL FIRST

Improper site preparation, Assembly and Maintenance may invalidate warranty and cause unnecessary and costly mistake. If you have any questions contact your local dealer.

For User Friendly assembly we have identified each individual component with the part code as indicated in the parts list. Please refer to the part code numbers and drawing to ensure problem free assembly.

It's necessary to tighten the roof fabric enough to avoid "hammocks" on the roof and also re-tighten once or twice again after a few months of use. This is important when assembly in cold weather (autumn and winter) because the fabric is stiff then and when we got the sun and warm weather afterwards it will make the fabric "slack" again and need to be re-tighten before next winter.

It's **the owners responsibility** to take of snow immediately if not slide off by itself.

READ ALL INSTRUCTIONS

BEFORE ASSEMBLY

1. Keep work area clean. Cluttered areas invite injuries. Do not set up near snow drifts, in slippery places, in high winds, or wet location.
2. Keep children away. All children should be kept away from the work area.
3. Don't over reach. Keep proper footing and balance at all times.
4. Do not assemble in under the influence of alcohol or drugs. Read warning labels on prescriptions to determine if your judgment or reflexes are impaired while taking drugs. If there is any doubt, do not assemble.
5. Be aware of possible windy conditions; fasten the bases in concrete if these conditions are likely to occur. Remove the cover during hurricane.
6. Be careful with power and heat sources. Do not keep heat sources near the tarpaulin. Do not expose to open flame.
7. Be aware of personal safety during assembly and use. Be careful not to pinch fingers with clips and tubes when assembling: when using makes sure there is adequate ventilation for exhaust and other dangerous fumes.

306020DP Parts List		10ft Arch Spacing
Part Code	Description	Qty
1	Roof bent tube	5
1A	Roof bent tube for front and back door	2
2	Sidewall bent tube	10
2A	Sidewall bent tube for front and back door	4
3	Shoulder bent tube	14
4	Standing leg	12
4A	Standing leg for front door	2
5	Purlin	54
6	Ratchet	18
6L	Base plate at left corner	2
6R	Base plate at right corner	2
7	Base plate at middle	10
8	Base plate for mechanical door	4
9	The door splint	8
10L	Lower door track at left for front and back door	2
10R	Lower door track at right for front and back door	2
11L	Upper door track at left for front and back door	2
11R	Upper door track at right for front and back door	2
12	Door beam on both doors	4 / 2 groups
12A	Vertical support tube for door beam	2
13	Shoulder purlin for both door	4
14	Tube for No. 14A	2
14A	Mechanical wheel	2
15	Steel wire for mechanical door	2
16	Tensioning tube for front and back door	4
17	Steel wire at side (including turnbuckle and clip)	12
18	Steel wire on top (including turnbuckle and clip)	12

19	Clip for both doors and steel wire	28
19A	Angle iron	6
20	Vertical pipe for front and back door	28 /14 groups
21	Base tensioning tube for roof cover	14 /2 groups
22	Carriage bolt M8*80mm	168
22A	Bolt M12*40mm	28
23	Carriage bolt M10*90mm	63
24	Bolt M10*90mm	48
25	Bolt M10*30mm	4
25A	Bolt M10*60mm	8
26	Nylon band for ratchet	14
27	Ropes	1 bundle
28	Plastic plug	12
29	Expansion screw	64
30	Tension ball	4
31	Front and back door cover	2
32	Roof cover	1
33	PPR tube	42m / 2 groups
34	Small ratchet with belt	26

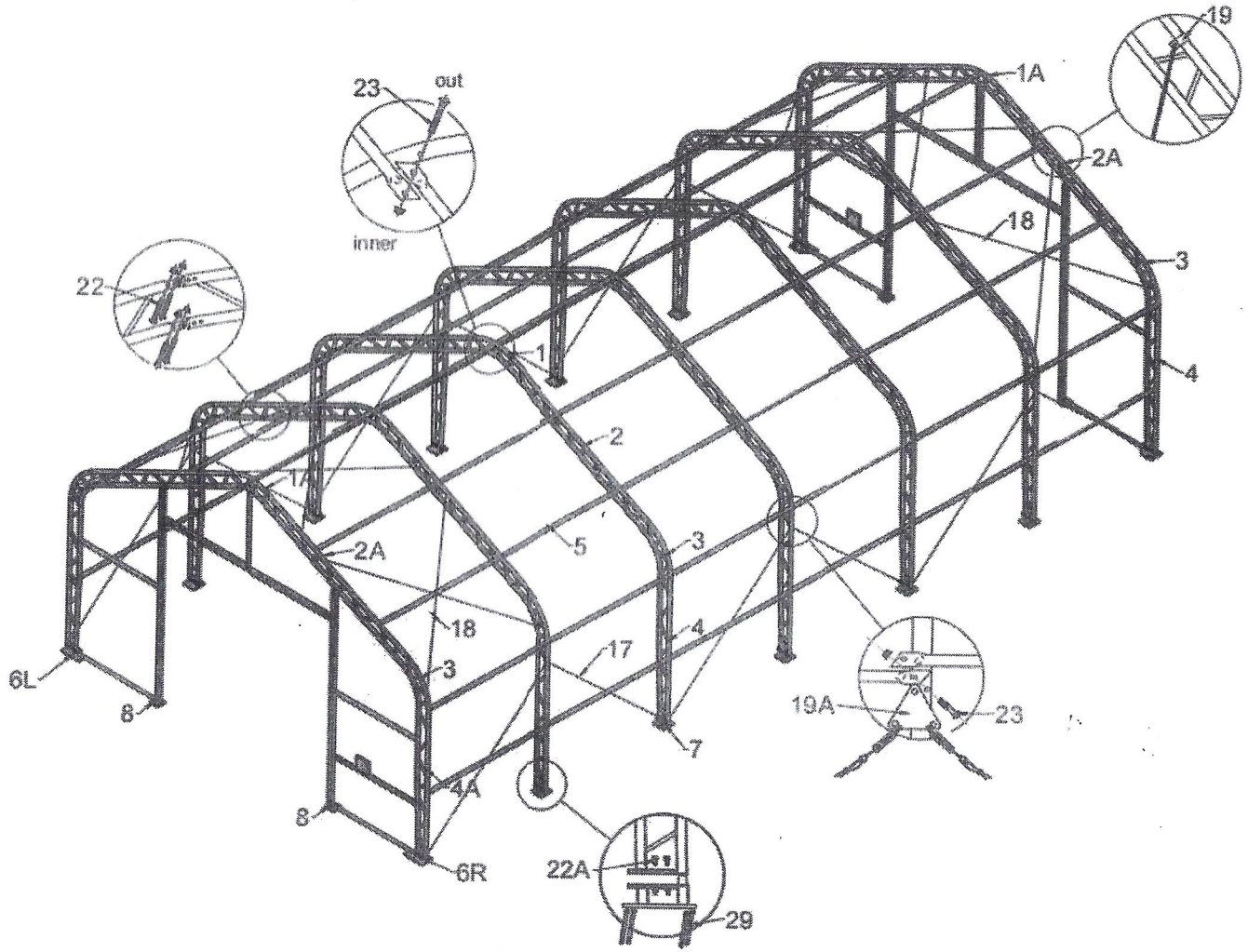

Figure 1: Frame Sketch

EQUIPMENT AND TOOLS FOR INSTALLATION

1. Measuring Tape
2. String for alignment
3. Stake
4. Ladder or Scissors Lift
5. Sledge Hammer
6. Drill
7. Wrench
8. Knife
9. Hoist

INSTALLATION PROCESS

A—BASE INSTALLATION

Please refer to the diagram (Figure 2) to place the base plates.

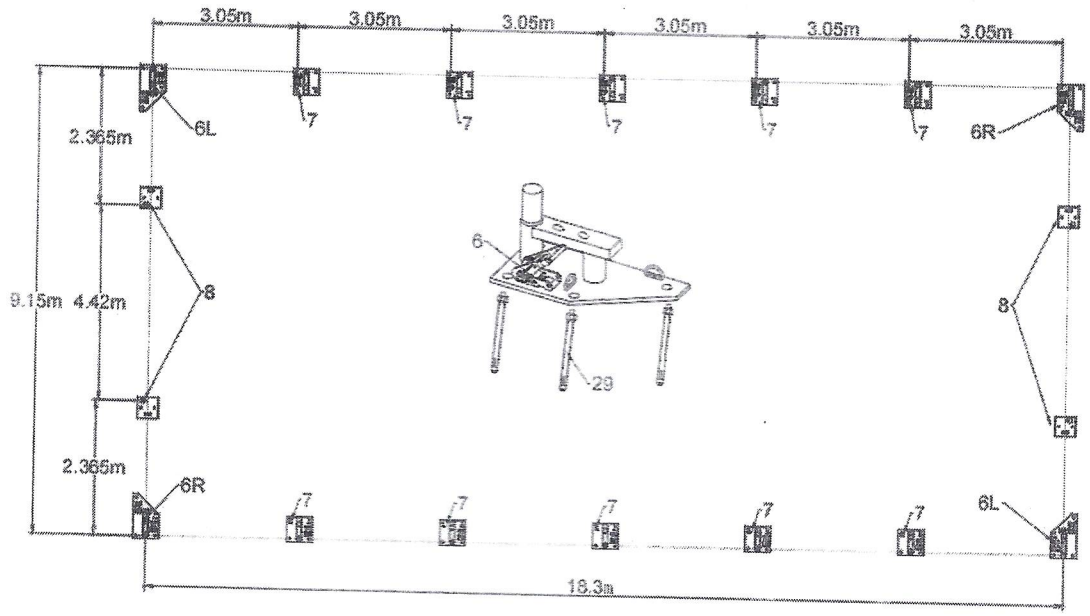

Figure 2: Foundation Placement

1. The measurement is from center to center of the tubes on the base plates. Referring to the above diagram and confirm the place of the base plates. ENSURE THAT THE FOUNDATIONS IS SQUARE.
2. As Figure 2 shows, each base plate is equipped with 4 pieces of expansion screw. Mark the expansion screw hold through the base plate by using the expansion screw. Move the base plates away and the mark determines where the expansion screw will be.

B---FRAME INSTALLATION

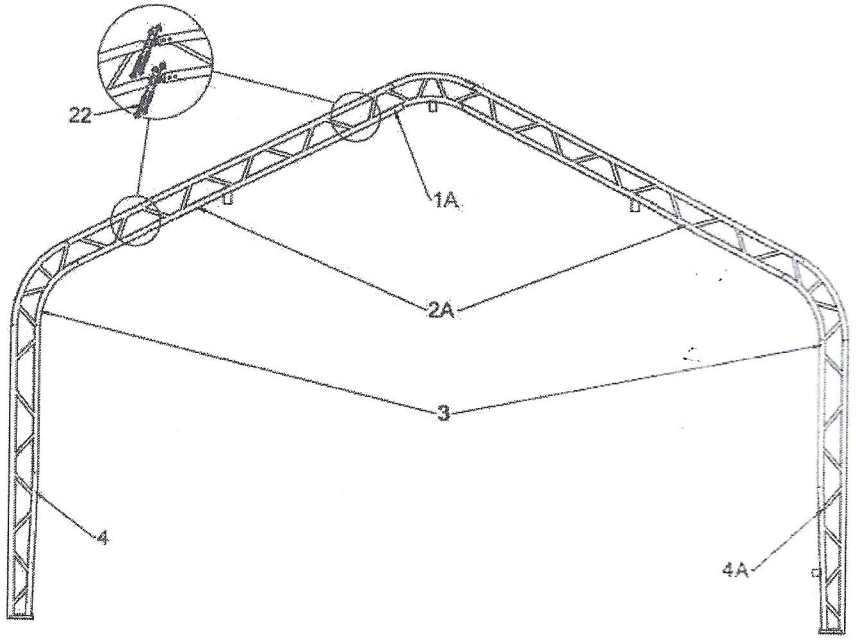

Figure 3

1. Figure 3 shows to connect the roof bent tube for front and back door (No.1A), sidewall bent
tube for front and back door (No.2A), shoulder bent tube (No.3), standing leg (No.4) and standing leg for front door (No.4A) with carriage bolt 8x80mm (No.22), then put the arch into tube of the base flange by hoist.

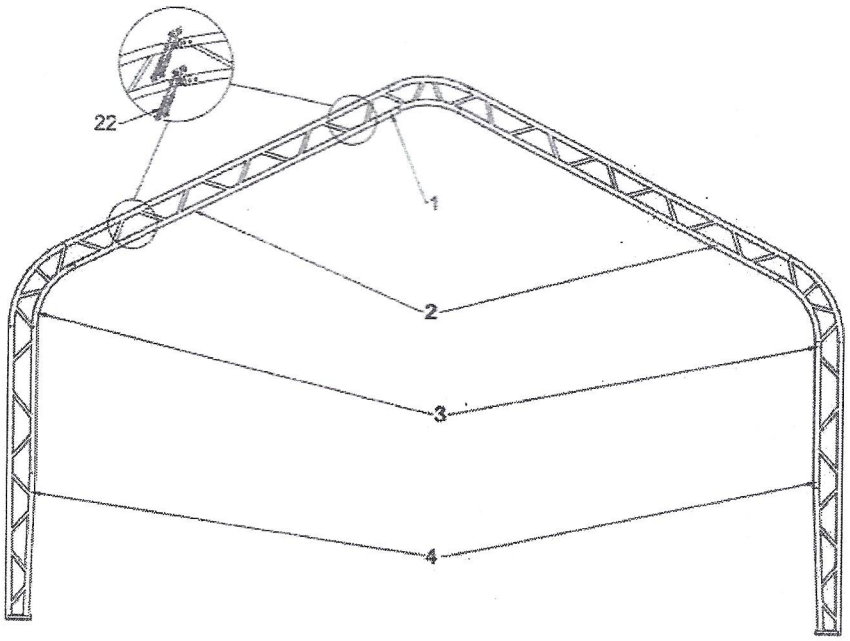

Figure 4

2. Figure 4 shows to connect the roof bent tube (No.1), sidewall bent tube (No.2), shoulder bent tube (No.3), and standing leg (No.4) with carriage bolt 8x80 (No.22), then put the arch into tube of the base flange by hoist, and assemble every group arch by turns (see Figure 5)

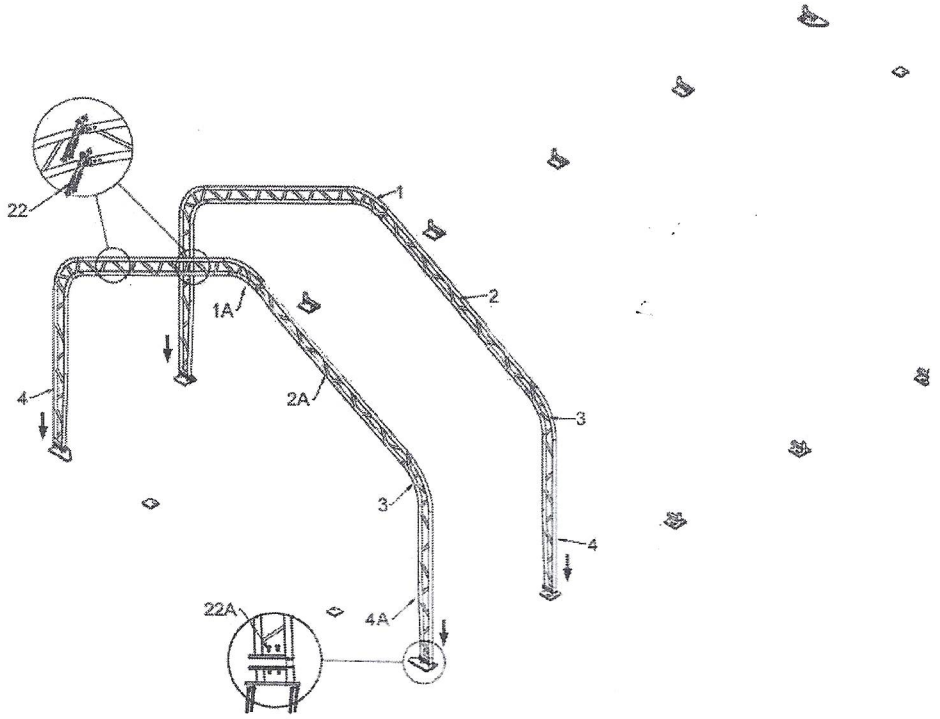

Figure 5

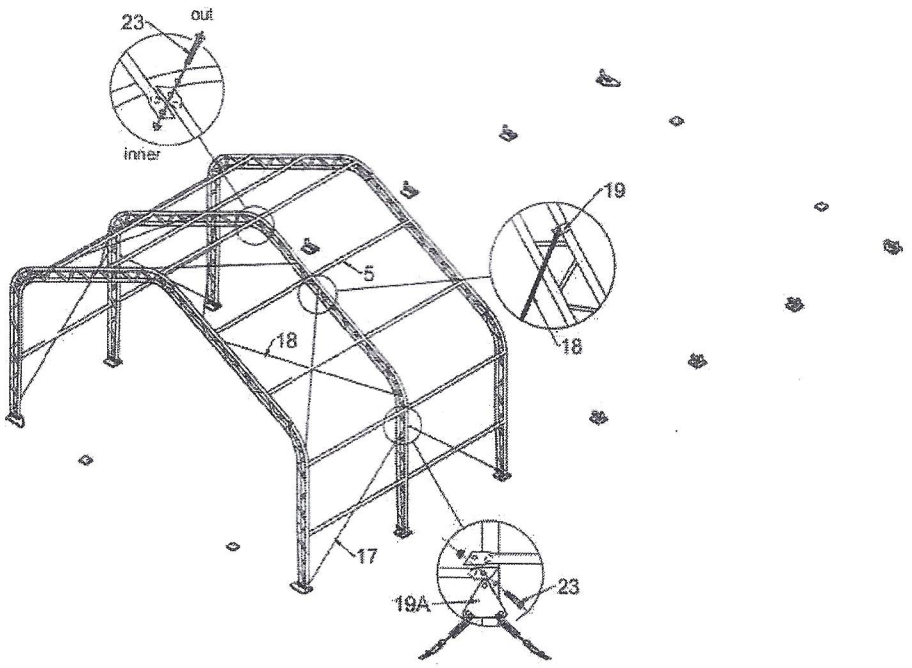

Figure 6

3. Connect purlin (No.5) to arch by using carriage bolt 10x90mm (No.23) by turns (see Figure 6), then connect the steel wire (No.17 and No.18) on top and side by using clip (No.19).

C-- INSTALLING FRONT AND BACK COVER

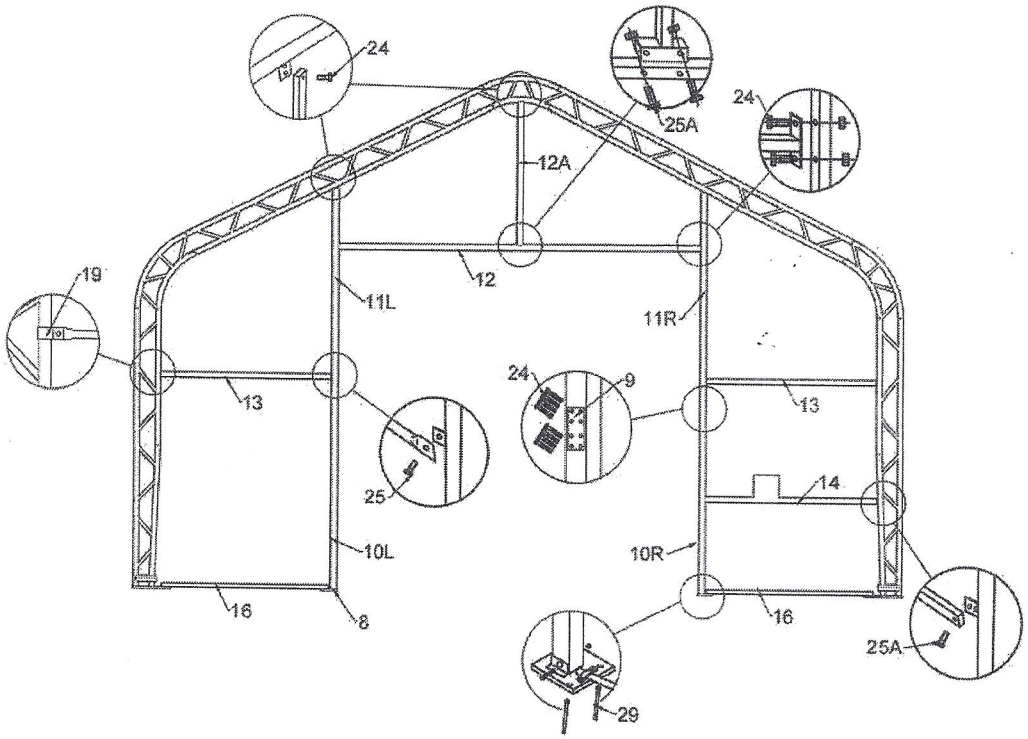

Figure 7: Front and Back door

1. Figure 7 shows to assemble the door frame.

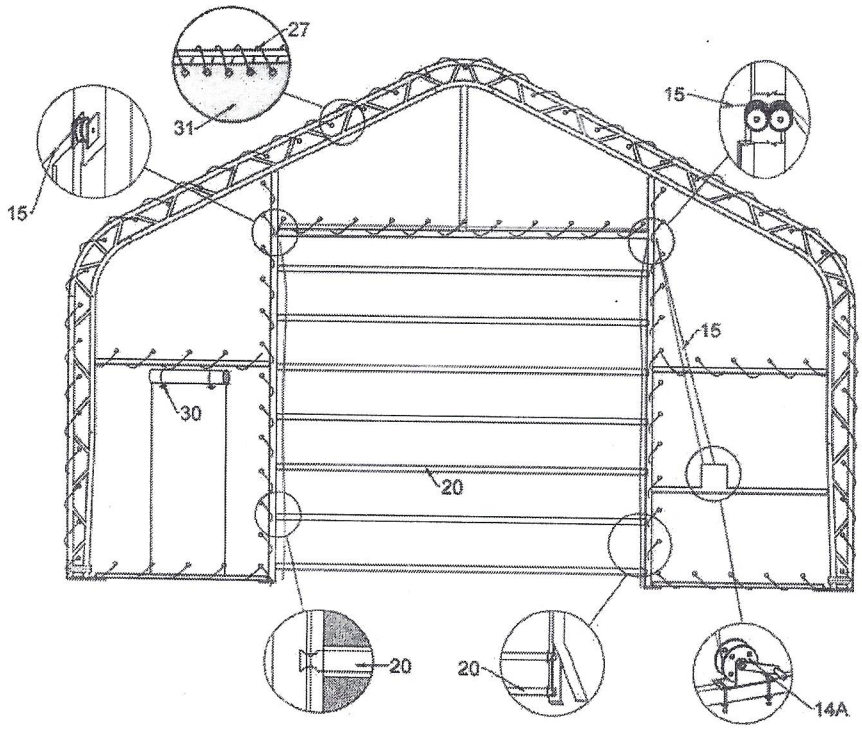

Figure 8: Front and Back Cover

2. Insert the vertical pipe into front and back door through the pockets on covers, assembly the mechanical wheel, tidy the front door and back door covers by using rope(No.27), **make the cover well fold to the frame first and then tension the cover.**

D-- INSTALLING THE ROOF COVER

NOTE: Do not install the cover onto the frame of your building in high wind condition.

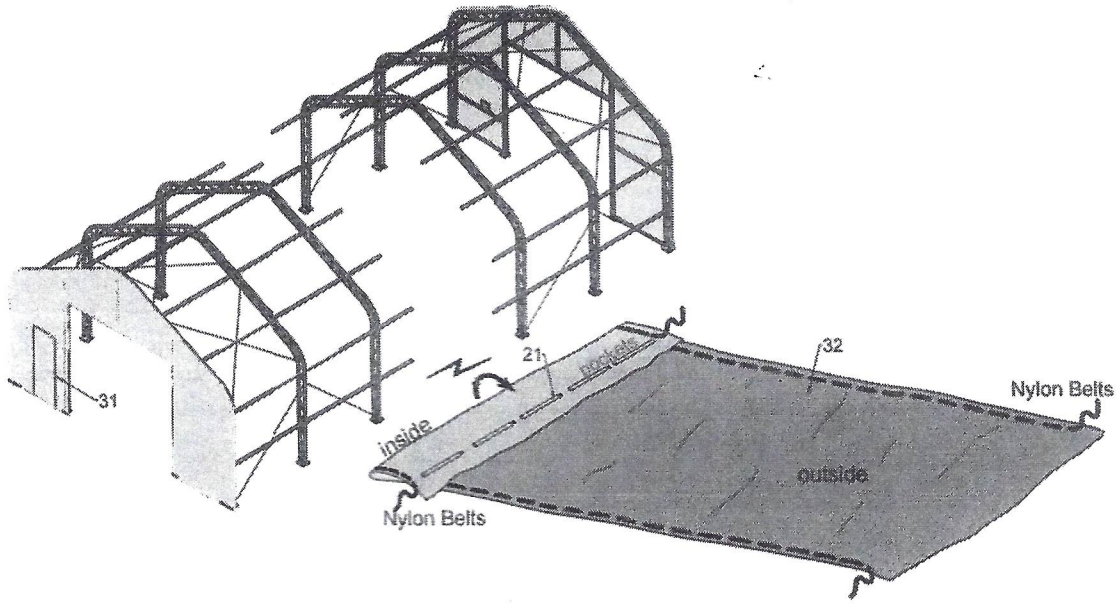

Figure 9

1. Spread the cover (No.32) and lay parallel to one side of the frame.
2. Insert the tensioning tube (No.21) into one side of roof cover only. Then place the plastic plug (No.28) on each end of tubes.

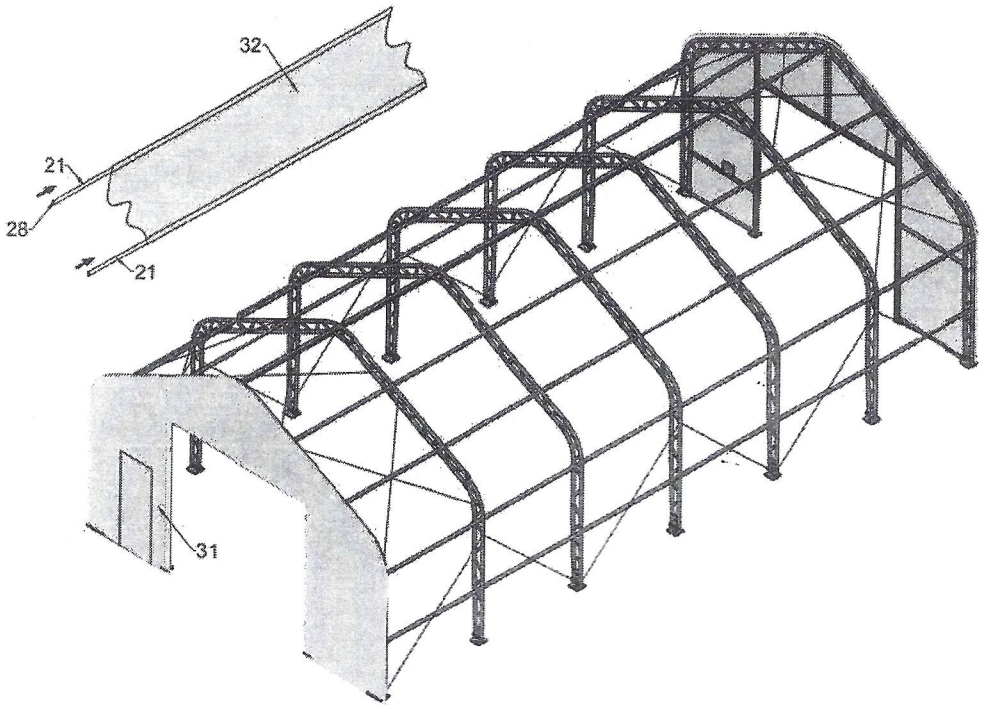

Figure 10

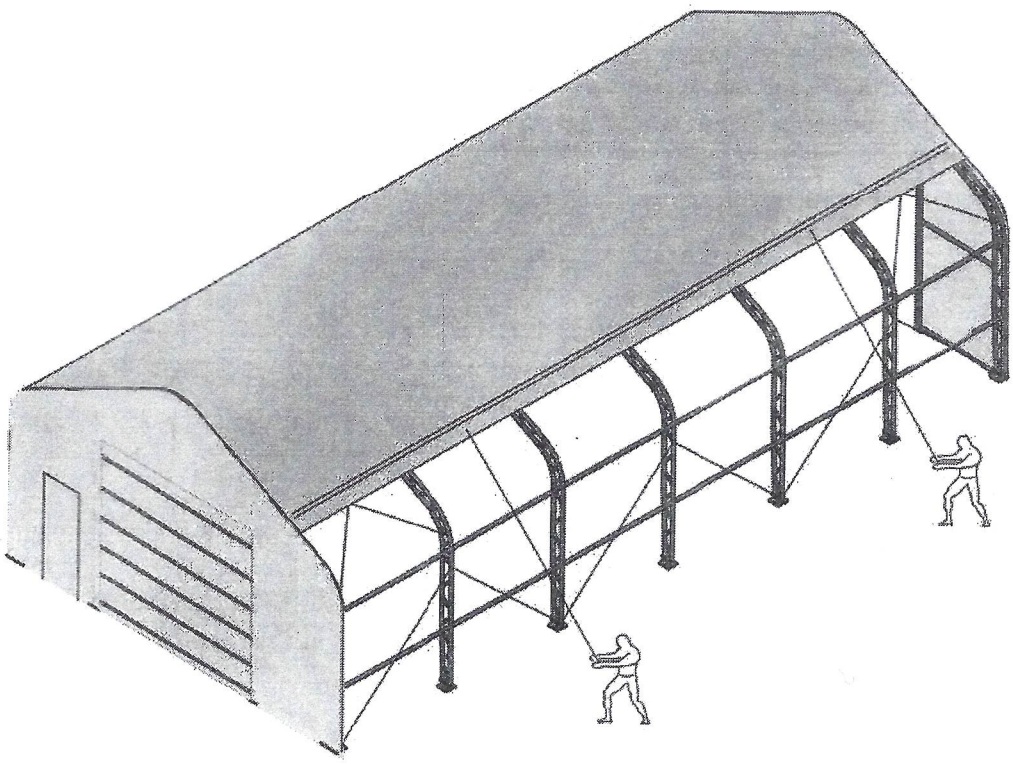

Figure 11

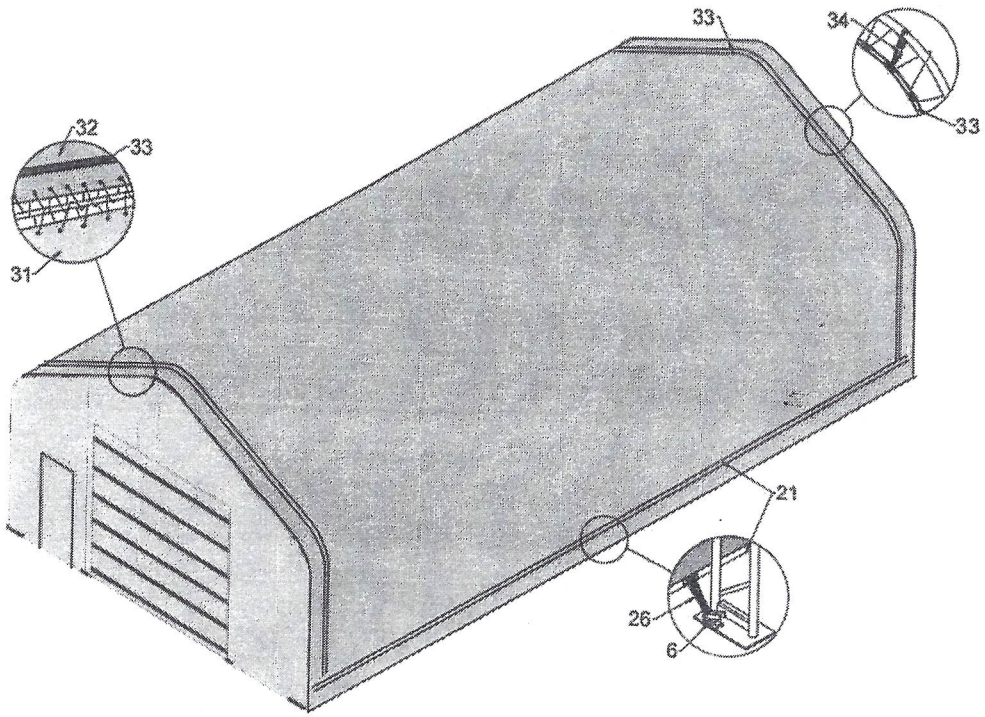

Figure 12

3. When roof cover is over top of frame assembly (see Figure 10&11), insert tensioning tubes (No.21) into pockets along both sides of roof cover, cut opening for nylon band for ratchet (No.26), find the nylon band over tube feed end into tie down to ratchet (No.6).
4. The roof cover is tensioned from front to back by the rope lacing to grommet flaps inside the main cover, inside the unit at both front and rear arches. Using the rope provided, lace the main cover grommet flap around the main frame front and rear arch pieces. Start in the top middle of each arch, and lace to each side. Add rope length by tying pieces together or cutting as necessary.

CONGRATULATIONS: NOW YOUR ASSEMBLY IS COMPLETED