SKYJACK™

OPERATING MANUAL
ANSI & CSA

This manual MUST be kept and stored with the aerial platform at all times.



SJIII Series

The Compacts and Conventionals

Models 32xx, 46xx and 68xx

For Service please call ***800 275-9522***
Skyjack Inc. Service Center, 3451 Swenson Ave., St. Charles, IL. 60174 *FAX 630 262-0006*
For Parts in North America and Asia please call ***800 965-4626***
Skyjack Inc. Parts Center, 3451 Swenson Ave., St. Charles, IL. 60174 ..... *FAX 888 782-4825*
For Parts & Service in Europe please call ***44-1691-676-235***
Skyjack Europe, Glovers Meadow, Maesbury Rd., Oswestry, Shropshire, U.K ..... *FAX 44-1691- 676-239*

129918AF-A Printed in Canada April 2006

OPERATING MANUAL
ANSI & CSA

This manual MUST be kept and stored with the aerial platform at all times.

The Compacts and Conventionals
Models 32xx, 46xx and 68xx

USE THE SERIAL NUMBER OF YOUR MACHINE TO DETERMINE THE CORRECT OPERATING MANUAL TO USE								
MANUAL PART #		118942AD	122882AJ	122908AE	129908AE	129917AF (CE)	129918AF (ANSI/CSA)	129939AD (AS)
Release Date		July 2003	July 2003	July 2003	July 2003	April 2006	April 2006	April 2006
MODEL	3015	150931 & Below	150932 to 151981	Not Used		Not Used		
	3219	229632 & Below	229633 to 236285					
	3215	Not Used		151982 to 152099	152100 to 152169	152170 & Above		
	3219			236286 to 237573	237574 to 239691	239692 & Above		244130 & Above
	3220	611286 & Below	611287 to 613550	613551 to 615016	615017 to 615505	615506 & Above		616430 & Above
	3226	Not Used	27013 to 28042 28048 to 28117	28043 to 28047 28118 to 270930	270931 to 271776	271777 & Above		
	4620	66658 & Below	66659 to 66875	Not Used	66876 to 66889	710000 & Above		
	4626	706174 & Below	706175 to 709362		709363 to 709588			
	4632	Not Used			Not Used			
	4830/32	87564 & Below	87565 to 870780		870781 to 871159	Not Used		
	6826	75578 & Below	75579 to 75618		75619	75620 & Above		
	6832	82573 & Below	82574 to 83066		83067 to 83100	83101 & Above		

60312AK

SJIII Series



The Safety Alert Symbol identifies important safety messages on machines, safety signs in manuals or elsewhere. When you see this symbol, be alert to the possibility of personal injury or death. Follow the instructions in the safety message.



This Safety Alert Symbol means attention!

Become alert! Your safety is involved.

DANGER

DANGER indicates an imminently hazardous situation which, if not avoided, will result in death or serious injury.

WARNING

WARNING indicates a potentially hazardous situation which, if not avoided, could result in death or serious injury.

CAUTION

CAUTION indicates a potentionally hazardous situation which, if not avoided, may result in minor or moderate injury. It may also be used to alert against unsafe practices.

IMPORTANT

IMPORTANT indicates a procedure(s) essential for safe operation and which, if not followed, may result in a malfunction or damage to the machine.

Table of Contents

Read and Heed

Aerial Platform Definition 6
Purpose of Equipment 6
Use of Equipment 6
Manual 6
Operator 6
Optional Accessories 6
Scope of this Manual 6

Section 1 - About Your Aerial Platform

1.1 Major Assemblies 7
1.2 Platform 7
1.3 Operator's Control Box 7
1.4 Manual Storage Box 7
1.5 Lifting Mechanism 7
1.6 Maintenance Support 7
1.7 Base 7
1.8 Tilt Sensing System 8
1.9 Serial Number Nameplate 8
1.10 Major Components 9
1.11 Standard and Optional Features 10
1.12 Operator Safety Reminders 11
1.13 Electrocution Hazard 11
1.14 Safety Precautions 12

Section 2 - Operation

2.1 General 15
2.1-1 Operator Qualifications 15
2.1-2 Operator's Responsibility for Maintenance 15
2.1-3 Maintenance and Inspection Schedule 15
2.1-4 Owner's Inspections 15
2.2 Component Identification 16
2.2-1 Emergency Main Power Disconnect Switch 16
2.2-2 Motion Alarm 16
2.2-3 Tilt Alarm 16
2.2-4 Base Controls 16
2.2-5 Parking Brake System 17
2.2-6 Free-Wheeling Valve 17
2.2-7 Battery Charger 17
2.2-8 Pothole Protection Device 18
2.2-9 Emergency Lowering System 18
2.2-10 Maintenance Support 19
2.2-11 Operator's Control Box 20
2.2-12 AC Outlet on Platform 20
2.2-13 Folding Guardrail System 20
2.2-14 Lanyard Attachment Ring 21
2.3 Component Identification (Special Options) 22
2.3-1 Power Extension Deck Control Box (If Equipped) 22
2.3-2 1500W AC Inverter (If Equipped) 22





Table of Contents

Section 2 - Continued

2.4 Setup Procedure 23
2.5 Start Operation 25
2.5-1 Pre-Start Inspection 25
2.5-2 Operator's Checklist 25
2.5-3 To Raise the Platform using the Base Controls 26
2.5-4 To Lower the Platform using the Base Controls 26
2.5-5 To Raise the Platform using the Operator's Control Box 26
2.5-6 To Lower the Platform using the Operator's Control Box 27
2.5-7 To Drive Forward or Backward 27
2.5-8 To Steer 28
2.5-9 To Select Drive Torque (If Equipped) 28
2.5-10 To Extend/Retract the Manual Extension Deck 28
2.5-11 To Extend/Retract the Powered Extension Deck (If Equipped) 29
2.5-12 Electrical Inverter (If Equipped) 29
2.5-13 Shutdown Procedure 29
2.6 Loading/Unloading 30
2.6-1 Lifting 30
2.6-2 Driving 31
2.7 Winching and Towing Procedures 32
2.7-1 To Release the Free-Wheeling Valve 32
2.7-2 To Release the Parking Brakes Manually 33
2.7-2a Pin Brakes System 33
2.7-2b Disc Brakes System 33
2.8 Emergency Lowering Procedure 34
2.9 Battery Maintenance 35
2.9-1 Battery Service Procedures 35
2.9-2 Battery Charging Operation 35
2.10 Tables 38
2.11 Labels 44

List of Tables

Table 2-1. Specifications and Features 38
Table 2-2. Floor Loading Pressure 40
Table 2-3. Owner's Annual Inspection Record 42
Table 2-4. Maximum Platform Capacities (Evenly Distributed) 42
Table 2-5. Maintenance and Inspection Schedule 43

SKYJACK Inc. is continuously improving and expanding product features on its equipment, therefore, specifications and dimensions are subject to change without notice.

Aerial Platform Definition
A mobile device that has an adjustable position platform supported from ground level by a structure.

Purpose of Equipment
The SKYJACK SJIII series aerial platforms are designed to transport and raise personnel, tools and materials to overhead work areas.

Use of Equipment
The aerial platform is a highly maneuverable, mobile work station. Lifting and driving MUST be on a flat, level, compacted surface.

Manual
The operating manual is considered a fundamental part of the aerial platform. It is a very important way to communicate necessary safety information to users and operators. A complete and legible copy of this manual must be kept in the provided weather-resistant storage compartment on the aerial platform at all times.

Operator
The operator MUST read and completely understand both this operating manual and the safety panel label located on the platform and ALL other warnings in this manual and on the aerial platform. Compare the labels on the aerial platform with the labels found within this manual. If any labels are damaged or missing, replace them immediately.

Optional Accessories
The SKYJACK aerial platform is designed to accept a variety of optional accessories. These are listed under "Standard and Optional Features" in Section 1.11.

Operating instructions for these options **(if equipped)** are located in Section 2 of this manual.

For options not listed under "Standard and Optional Features", contact the SKYJACK Service Department at 800 275-9522 or fax: 630 262-0006, include the model and serial number for each applicable machine.

Scope of this Manual

a. **This manual** applies to the ANSI/SIA and, CSA versions of the SJIII Series aerial platform models listed on Table 2-1a and Table 2-1b.

- **Equipment identified** with "ANSI" meets the ANSI SIA-A92.6-1999 standard.

- **Equipment identified** with "CSA" meets the CSA B354.2-01 standard.

b. **CSA (Canada)**
Operators are required to conform to national, territorial/provincial and local health and safety regulations applicable to the operation of this aerial platform.

c. **ANSI/SIA (United States)**
Operators are required by the current ANSI/SIA A92.6 standards to read and understand His/Her RESPONSIBILITIES in the Manual of Responsibilities before they use or operate this aerial platform.

1. About Your Aerial Platform

This section provides general information about your aerial platform. It describes the major components, standard and optional features, safety reminders and precautions.

1.1 Major Assemblies

The aerial platform consists of three major assemblies: the platform, the lifting mechanism and the base. An operator's control box is mounted on one of the platform guardrails. Auxiliary and emergency controls are located at the base.

1.2 Platform

The platform is constructed of a tubular support frame, a skid-resistant "diamond plate" deck surface and 39" hinged guardrails with 6" toe boards and mid-rails. The platform can be entered from the rear through an entry chain or optional spring-returned gate with latch. The platform is also equipped with an extension platform.

1.3 Operator's Control Box

A removable control box, mounted at the front right of the platform, contains controls for aerial platform motion and emergency stopping.

1.4 Manual Storage Box

This weather-resistant box is mounted to the inside of the hydraulic cabinet door at the base or at the front of the platform. It contains the Operating Manual, the Operating/Maintenance and Parts Manual and other important documentation. The Operating Manual for this make and model of aerial platform MUST remain with the aerial platform and should be stored in this box.



1.5 Lifting Mechanism

The lifting mechanism is constructed of formed steel or tube sections making up a scissor-type assembly. The scissor assembly is raised and lowered by single-acting hydraulic lift cylinders with holding valves. A two-section pump, driven by an electric motor, provides hydraulic power to the lift cylinders.

1.6 Maintenance Support

A maintenance support is located inside the lifting mechanism. When properly positioned, it can support the scissor assembly and empty platform. The maintenance support MUST be used during inspection and maintenance or when repairs are being performed within the lifting mechanism.

1.7 Base

The base is a rigid, one-piece weldment which supports two swing out trays.

- **Pothole Protection:** A mechanically actuated angle, located under the outside of the trays, rotates when lifting. This mechanism provides pothole protection for elevated driving (except models 6826 and 6832).

- **On Models 3215 and 3219:** One tray contains the hydraulic and electrical components. The other tray contains four (4) 6 volt batteries. The charger is located at the rear of the machine. The front axle has two hydraulic motor-driven wheels, steerable by a hydraulic cylinder. The rear axle is fixed and has one dual acting spring-applied hydraulically-released parking brake.

- **On Models 3220, 3226, 4620, 4626, 4632, 6826 and 6832:** One tray contains the hydraulic and electrical components. The other tray contains battery charger and four (4) 6 volt batteries. The front axle has two non-driven wheels, steerable by a hydraulic cylinder. The rear axle has two hydraulic motor-driven wheels and two spring-applied hydraulically-released parking brakes.

1.8 Tilt Sensing System

The tilt sensing system located on the base of the aerial platform is designed to prevent lifting or driving when the machine is on a slope greater than a predetermined limit. If in this situation the platform must be fully lowered immediately.

1.9 Serial Number Nameplate

The serial number nameplate, located at the rear of the machine, lists the following:

- Model number
- Serial number
- Machine weight
- Maximum drivable height
- Maximum capacities
- Maximum number of persons permissible on the platform
- Voltage
- System pressure
- Lift pressure
- Maximum platform height
- Maximum wheel load

Use this information for proper operation and maintenance and when ordering service parts.

1.10 Major Components

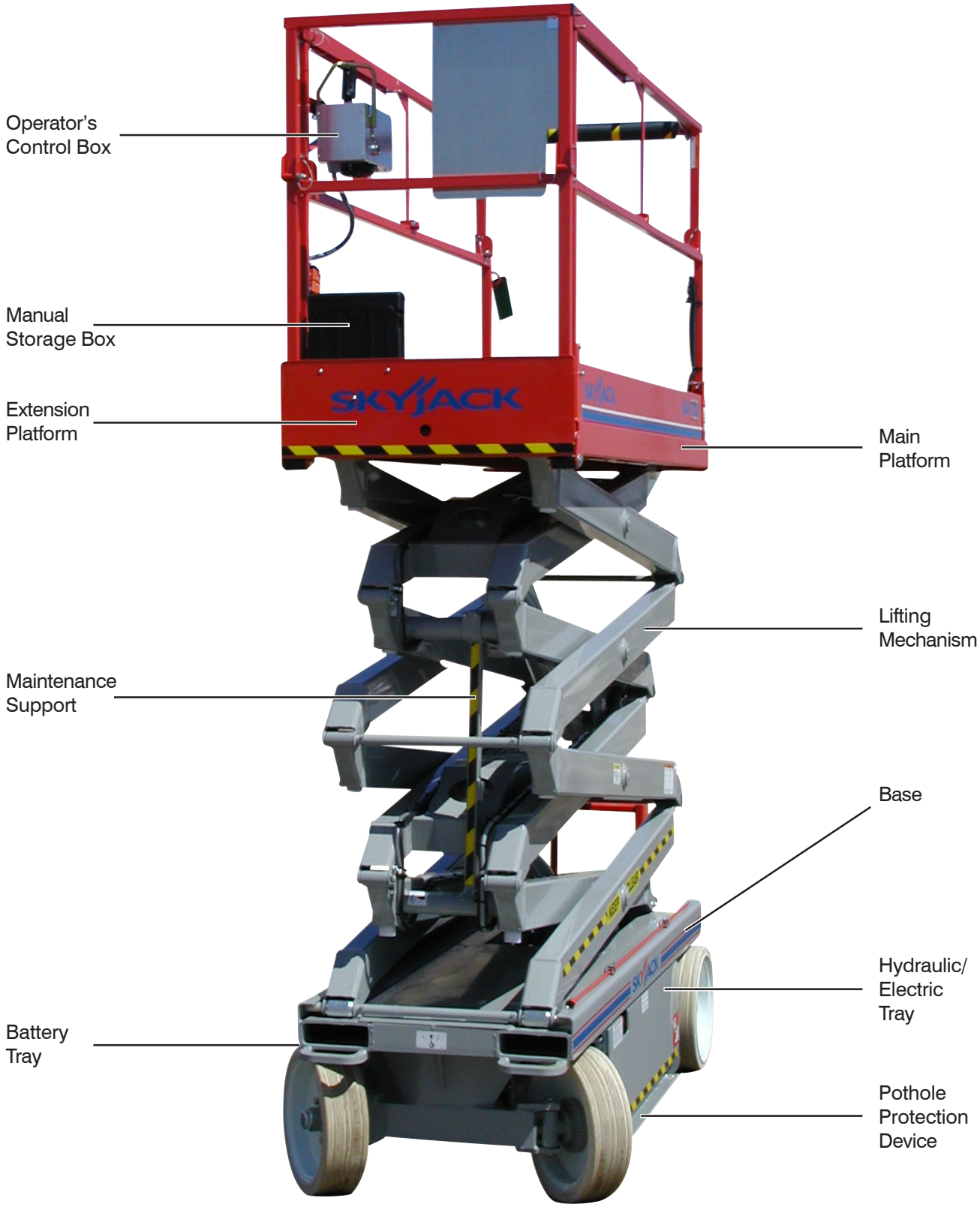

SKYJACK SJIII Series Aerial Platform

1.11 Standard and Optional Features

SJIII Series – Compacts & Conventionals – SPECIFICATIONS – ANSI/CSA & AS

	Compacts		Conventionals						
Models	**3215**	**3219**	**3220**	**3226**	**4620**	**4626**	**4632**	**6826**	**6832**
STANDARD EQUIPMENT									
Drivable at full height	*	*	*	*	*	*	*	*	*
Positive traction	*	*	*	*	*	*	*	*	*
Dual holding brakes	*	*	*	*	*	*	*	*	*
Battery charge indicator	*	*	*	*	*	*	*	*	*
Battery level indicator	*	*	*	*	*	*	*	*	*
Low voltage battery protection	*	*	*	*	*	*	*	*	*
Color coded and numbered wiring system	*	*	*	*	*	*	*	*	*
Swing out trays for easy access	*	*	*	*	*	*	*	*	*
Proportional control for drive/lift with joystick control	*	*	*	*	*	*	*	*	*
Tilt alarm with drive/lift cut out	*	*	*	*	*	*	*	*	*
GFCI AC outlet on platform	*	*	*	*	*	*	*	*	*
Lanyard attachment points	*	*	*	*	*	*	*	*	*
Forklift pockets/tie downs/lifting lugs	*	*	*	*	*	*	*	*	*
Hydraulic oil level and temperature indicators	*	*	*	*	*	*	*	*	*
All motion audible alarm	*	*	*	*	*	*	*	*	*
Operator horn	*	*	*	*	*	*	*	*	*
Midrail chain entrance	*	*	*	*	*	*	*	*	*
Top railing with a midrail & 6” (0.15m) toeboard	*	*	*	*	*	*	*	*	*
Hourmeter	*	*	*	*	*	*	*	*	*
Base controls	*	*	*	*	*	*	*	*	*
Hinged railing system				*		*	*	*	*
Variable front wheel hydraulic drive	*	*							
Variable rear wheel hydraulic drive			*	*	*	*	*	*	*
Freewheeling valve	*	*	*	*	*	*	*	*	*
Pothole protection	*	*	*	*	*	*	*		
3’ (0.9m) Extension deck	*	*	*	*				*	*
4’ (1.2m) Extension deck					*	*	*		
OPTIONAL EQUIPMENT									
Flashing Light	*	*	*	*	*	*	*	*	*
Shop airline to platform	*	*	*	*	*	*	*	*	*
Spring loaded half or full gate entry**	*	*	*	*	*	*	*	*	*
Hinged railing system	*	*	*		*				
5’ (1.5m) Powered deck extension								*	*
6’ (1.8m) Powered deck extension			*		*	*			
EE rating package	*	*	*	*	*	*	*	*	*
Inverter	*	*	*	*	*	*	*	*	*
Non-marking foam filled tires								*	*

60381AC-ANSI

** Full height gate not available with hinged railings on 32xx models

Warning

Failure to comply with your required responsibilities in the use and operation of the aerial platform could result in death or serious injury!

1.12 Operator Safety Reminders

A study conducted by St. Paul Travelers showed that most accidents are caused by the failure of the operator to follow simple and fundamental safety rules and precautions.

You, as a careful operator, are the best insurance against an accident. Therefore, proper usage of this aerial platform is mandatory. The following pages of this manual should be read and understood completely before operating the aerial platform.

Common sense dictates the use of protective clothing when working on or near machinery. Use appropriate safety devices to protect your eyes, ears, hands, feet and body.

Any modifications from the original design are strictly forbidden without written permission from SKYJACK Inc.

1.13 Electrocution Hazard

This aerial platform is not electrically insulated. Maintain a Minimum Safe Approach Distance (MSAD) from energized power lines and parts as listed below. The operator **must allow** for the platform to sway, rock or sag. **This aerial platform does not provide protection from contact with or proximity to an electrically charged conductor.**

DO NOT USE THE MACHINE AS A GROUND FOR WELDING.
DO NOT OPERATE THE MACHINE DURING LIGHTNING OR STORMS.

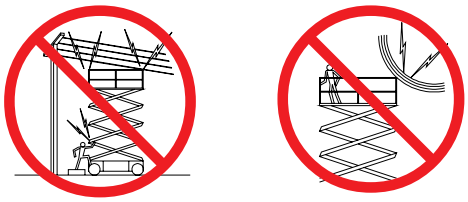

DANGER
Avoid Power Lines

Minimum Safe Approach Distance

ANSI/SIA A92.6-1999 & CSA B354.2-01 Requirements

Voltage Range	Minimum Safe Approach Distance
(Phase to Phase)	Feet
0 To 300V	Avoid Contact
Over 300V to 50KV	10
Over 50KV to 200KV	15
Over 200KV to 350KV	20
Over 350KV to 500KV	25
Over 500KV to 750KV	35
Over 750KV to 1000KV	45

FAILURE TO AVOID THIS HAZARD WILL RESULT IN DEATH OR SERIOUS INJURY!

60023AC-ANSI

1.14 Safety Precautions

Know and understand the safety precautions before going on to next section.

Warning

Failure to heed the following safety precautions could result in tip over, falling, crushing, or other hazards leading to death or serious injury.

- **KNOW** all national, state/provincial and local rules which apply to your MACHINE and JOBSITE.
- **TURN** the emergency main power disconnect switch OFF when leaving the machine unattended. Remove the key to prevent unauthorized use of the aerial platform.
- **WEAR** all the protective clothing and personal safety devices issued to you or called for by job conditions.
- **DO NOT** wear loose clothing, dangling neckties, scarves, rings, wristwatches or other jewelry while operating this lift.



- **AVOID** entanglement with ropes, cords or hoses.



- **AVOID** falling. Stay within the boundaries of the guardrails.

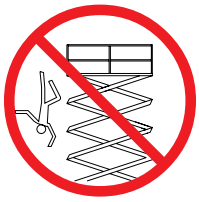

- **DO NOT** raise the aerial platform in windy or gusty conditions.



- **DO NOT** increase the lateral surface area of the platform. Increasing the area exposed to the wind will decrease machine stability.



- **DO NOT** drive or elevate the aerial platform if it is not on a firm level surface. Do not drive elevated near depressions or holes of any type, loading docks, debris, drop-offs and surfaces that may affect the stability of the aerial platform.



- **If operation in areas with holes or drop-offs is absolutely necessary,** elevated driving shall not be allowed. Position the aerial platform horizontally only with the platform fully lowered. After ensuring that all 4 wheels or outriggers (if equipped) have contact with level firm surface, the aerial platform can be elevated. After elevation, the drive function must not be activated.



- **Elevated driving** must only be done on a firm level surface.



- **DO NOT** ascend or descend a grade steeper than 23% (3215 & 3219) or 25% (3220, 3226, 4620, 4626, 4632, 6826 & 6832). Ascend or descend grades only when fully lowered and then only to the maximums noted above.



1.14 Safety Precautions (Continued)

Know and understand the safety precautions before going on to next section.

- **DO NOT** operate on surfaces not capable of holding the weight of the aerial platform including the rated load, e.g., covers, drains, and trenches.
- **DO NOT** operate an aerial platform that has ladders, scaffolding or other devices mounted on it to increase its size or work height. It is prohibited.



- **DO NOT** exert side forces on aerial platform while elevated.



- **DO NOT** use the aerial platform as a crane. It is prohibited.



- **DO NOT** sit, stand or climb on the guardrails. It is prohibited.



- **DO NOT** climb on scissor arm assembly. It is prohibited.



- **BE AWARE** of overhead obstructions or other possible hazards around the aerial platform when driving or lifting.

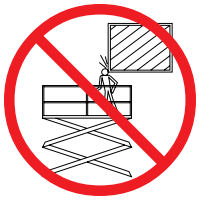

- **DO NOT** raise the aerial platform while the machine is on a truck, fork lift or other device or vehicle.



- **BE AWARE** of crushing hazards. Keep all body parts inside platform guardrails.



- **DO NOT** lower the platform unless the area below is clear of personnel and obstructions.



- **ENSURE** that there are no personnel or obstructions in the path of travel, including blind spots.



- **BE AWARE** of blind spots when operating the aerial platform.
- **STUNT** driving and horseplay are prohibited.
- **ENSURE ALL** tires are in good condition and lug nuts are properly tightened.
- **DO NOT** alter or disable limit switches or other safety devices.
- **DO NOT** use the aerial platform without guardrails, locking pins and the entry gate/chain/bar in place.
- **DO NOT** exceed the rated capacity of the aerial platform. Do make sure the load is evenly distributed on the platform.

1.14 Safety Precautions (Continued)

Know and understand the safety precautions before going on to next section.

- **DO NOT** overload the platform. The lift relief valve does not protect against overloading when the platform is elevated.
- **DO NOT** attempt to free a snagged platform with lower controls until personnel are removed from the platform.
- **DO NOT** position the aerial platform against another object to steady the platform.
- **DO NOT** place materials on the guardrails or materials that exceed the confines of the guardrails unless approved by Skyjack.

Warning

Entering and exiting the aerial platform should only be done using the three points of contact system.
- Use only equipped access openings and ladders.
- Enter and exit only when the aerial platform is in the fully retracted position.

- **Do use three points of contact to enter and exit the platform.** Enter and exit the platform from the ground only. Face the machine when entering or exiting the platform.
- **Three points of contact** means that two hands and one foot **OR** one hand and two feet are in contact with the aerial platform or the ground at all times during entering and exiting.

Warning

An operator should not use any aerial platform that:
- does not appear to be working properly.
- has been damaged or appears to have worn or missing parts.
- has alterations or modifications not approved by the manufacturer.
- has safety devices which have been altered or disabled.

Failure to avoid these hazards could result in death or serious injury.

Jobsite Inspection

- Do not use in hazardous locations.
- Perform a thorough jobsite inspection prior to operating the aerial platform to identify potential hazards in your work area.
- Be aware of moving equipment in the area. Take appropriate actions to avoid collision.

2. Operation

This section provides the necessary information needed to operate the aerial platform. It covers the basic and optional components of the machines, operation and start procedures, winching and towing procedures, loading/unloading, tires specifications, labels, platform capacities and tables related to the proper maintenance of this machine. It is important that the user reads and understands this section before operating the aerial platform.

2.1 General

In order for this aerial platform to be in good working condition, it is important that the operator meets the necessary qualifications and follows the maintenance and inspection schedule referred to in this section.

2.1-1 Operator Qualifications

- **ONLY** trained and authorized personnel **SHALL** be permitted to operate an aerial platform.
- Safe use of this aerial platform requires the operator to understand the limitations and warnings, operating procedures and operator's responsibility for maintenance. Accordingly, the operator **MUST** understand and be familiar with this operating manual, its warnings and instructions, manual of responsibilities and **ALL** warnings and instructions on the aerial platform.
- The operator **MUST** be familiar with employer's work rules and related government regulations and be able to demonstrate the ability to understand and operate **THIS** make and model of aerial platform in the presence of a qualified person.

2.1-2 Operator's Responsibility for Maintenance

Warning

Maintenance MUST be performed by competent personnel who are familiar with mechanical procedures.
Death or serious injury could result from the use of an aerial platform that is not properly maintained or kept in good working condition.

- The operator must be sure that the aerial platform has been properly maintained and inspected before using it.
- The operator must perform ALL the daily inspections found in Table 2-5, even if the operator is not directly responsible for the maintenance of this aerial platform.

2.1-3 Maintenance and Inspection Schedule

- The inspection points covered in Table 2-5 indicate the areas of the aerial platform to be maintained or inspected and at what intervals the maintenance and inspections are to be performed.
- The actual operating environment of the aerial platform may affect the maintenance schedule.

Warning

Use original or equivalent to the original parts and components for the aerial platform.

2.1-4 Owner's Inspections

It is the responsibility of the owner to arrange daily, weekly, monthly and annual inspections of the aerial platform. Refer to Table 2-5 for recommended maintenance and inspection areas and intervals. A record of annual inspection is kept on a label located on the scissor assembly. Refer to Table 2-3 in this manual.

2.2 Component Identification

The following descriptions are for identification, explanation and locating purposes only.

2.2-1 Emergency Main Power Disconnect Switch

Emergency Main Power Disconnect Switch - This switch is located at the rear of the base.



Figure 2-1. Emergency Main Power Disconnect Switch

1. **Emergency Main Power Disconnect Switch** - This switch, when in "OFF" position, disconnects power to all circuits. Switch MUST be in "ON" position to operate any circuit.

2.2-2 Motion Alarm

The aerial platform is equipped with a motion alarm. The alarm produces an audible sound accompanied by the amber light (if equipped) when any control function is selected.

2.2-3 Tilt Alarm

The aerial platform is equipped with a device which senses when the machine is out of level in any direction. When activated, it disables drive and lift functions of the aerial platform and an alarm produces an audible sound accompanied by the amber light (if equipped). This alarm activates once every 1.5 seconds. Lower platform completely, then reposition machine so that it is level before raising platform.

Note
If the tilt alarm sounds and the platform does not, or only partially raises, immediately lower the platform and ensure that the machine is on a firm **LEVEL** surface.

2.2-4 Base Controls

2.2-4a. Models 32xx & 46xx:
This control station is found on the rear of the base. It contains the following controls:

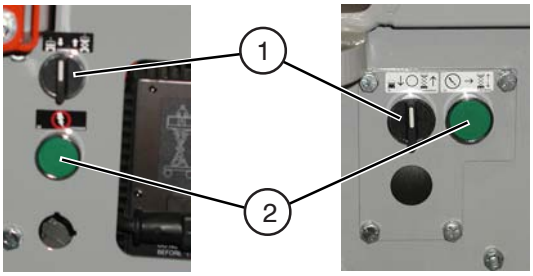

3215 & 3219 *3220, 3226 & 46xx*

Figure 2-2. Base Controls

1. **Platform UP/DOWN Select Switch** - This switch raises or lowers the platform to a desired height.

2. **Enable Button** - This switch, when activated, brings power to the platform UP/DOWN select switch.

2.2-4b. Models 68xx:
This control station is located in the hydraulic/electric side tray. It contains the following controls:

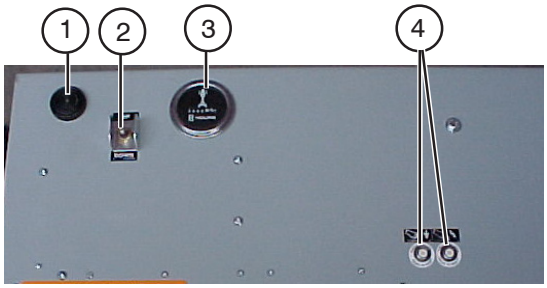

Figure 2-3. Electrical Panel

1. **Buzzer Alarm** - This audible pulse alarm will beep in varying intervals depending on the status of the platform.

2. **Platform UP/DOWN Toggle Switch** - This toggle type switch raises or lowers the platform to a desired height.

3. **Hourmeter** - This gauge records the accumulated time of operation of the aerial platform.

4. **Circuit Breaker Resets** - In the event of a power overload or positive circuit grounding, the circuit breaker will pop out. Push the breaker back in to reset.

2.2-5 Parking Brake System

The parking brake system is located at the rear axle on the back of the machine.

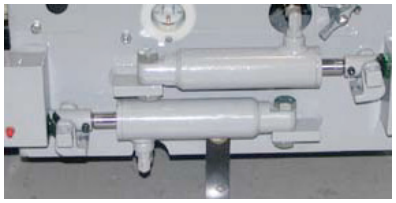

Pin Brakes (If Equipped)

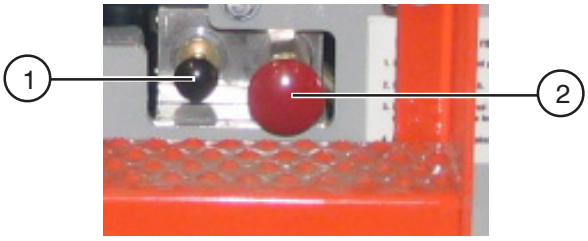

DiscBrakes (If Equipped)

Figure 2-4. Parking Brakes

1. Brake plunger (black knob)
2. Parking brake release hand pump (red knob)

Parking Brakes - The parking brakes are devices that are always mechanically engaged until hydraulically or manually released. Before towing or winching, the brakes have to be released manually. Refer to Section 2.7-2.

2.2-6 Free-Wheeling Valve

Free-Wheeling Valve - The free-wheeling valve is located at the front and/or rear of the machine (depending on the model).



3220, 3226, 46xx & 68xx



3215 & 3219

Figure 2-5. Free-Wheeling Valve

1. **Free-Wheeling Valve** - Turning the valve knob (counterclockwise) to a fully opened position allows fluid to flow through the wheel motors, thus providing "free-wheeling" so that the aerial platform can be pushed, towed or winched after the brakes are released without damaging the wheel motors. The free-wheeling valve MUST be closed tightly (clockwise) for normal operation. Refer to Section 2.7-1 for procedure on how to release the free-wheeling valve.

2.2-7 Battery Charger

This machine is battery-powered and is equipped with a battery charger.

Battery Charger - The charger is located on the rear of the base or inside the battery tray. For details on charging operation, refer to Section 2.9-2.

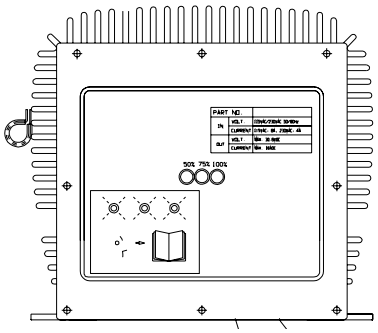

Figure 2-6. Battery Charger

2.2-8 Pothole Protection Device



Figure 2-7. Pothole Protection Device

1. **Pothole Protection Device** - This device consists of a set of mechanically actuated steel weldments located under the hydraulic/electric tray and battery tray. These weldments will automatically rotate for reduced ground clearance when elevating the aerial platform. If the pothole protection device has not fully lowered, the drive function will be disabled.

Warning

Crushing Hazard
Personnel on ground **MUST** stay clear of pothole protection device.

Warning

Do not drive elevated in areas where electrical cords or debris are in the path of travel.

Maintenance of the Pothole Protection Device

As with all safety devices, periodic inspection and maintenance is required to ensure the proper operation of the pothole protection device. This mechanism is designed to reduce ground clearance and assist in the stability of an elevated aerial platform in the event the machine encounters a “Drop-off” or “Pothole”. The nature of this safety feature relies on maintaining a consistent ground clearance, therefore, if the machine ever does come to rest on the pothole device, the platform should be immediately lowered and “locked out” to prevent further use until a complete inspection of the mechanism is performed by a qualified technician.

2.2-9 Emergency Lowering System

Emergency Lowering System - This system allows platform lowering in the event of an emergency or an electrical system failure. Refer to Section 2.8 for the emergency lowering procedure. The system contains the following controls:

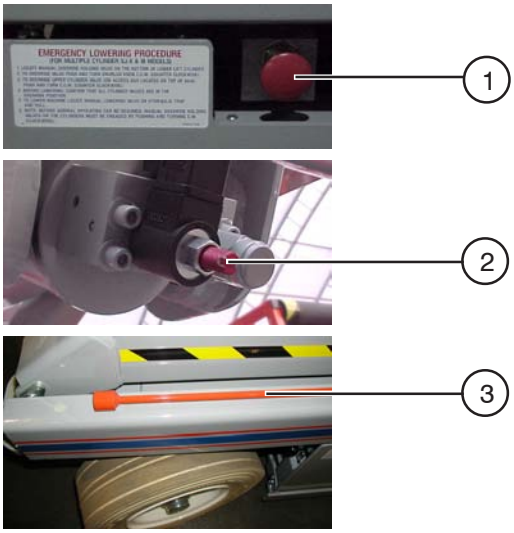

Figure 2-8. Emergency Lowering System

1. **Emergency Lowering Valve** - Located at the rear of the hydraulic/electric tray.

2. **Holding Valve Manual Override Knob** - Located on the holding valve at the bottom of each lift cylinder.

3. **Access Rod** (3226, 4626, 4632 & 68xx) - Located at the left side of the base.

2.2-10 Maintenance Support

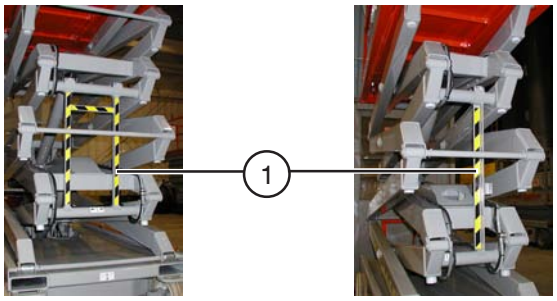

Figure 2-9. Maintenance Support

1. **Maintenance Support** - The maintenance support is a safety mechanism designed to support the scissor assembly. When properly positioned it can support the scissor assembly and empty platform. The maintenance support MUST be used when inspection and/or maintenance is to be performed within the lifting mechanism.

Warning

The maintenance support must be used when inspection and/or maintenance or repairs are to be performed within the lifting mechanism.
Failure to use this safety mechanism could result in death or serious injury.

Proper Use of Maintenance Support

- Remove all material from platform.
- Raise platform until there is adequate clearance to swing down the maintenance support. Refer to Section 2.5-3 on how to raise the platform using the base controls.
- Swing maintenance support down from storage bracket into a vertical position.
- Remove hands and arms from scissor assembly area.
- Lower platform until bottom end of maintenance support contacts the labeled cross bar and scissor assembly are supported by maintenance support. Refer to Section 2.5-4 on how to lower the platform using the base controls.
- Turn off emergency main power disconnect switch.

To Store the Maintenance Support

- Turn on emergency main power disconnect switch.
- Raise platform until there is adequate clearance to swing up the maintenance support.
- Swing bar up into storage bracket.
- Lower platform.

Warning

Do not reach through the scissor assembly when the platform is raised without the maintenance support properly positioned.
Failure to avoid this hazard could result in death or serious injury.

2.2-11 Operator's Control Box

Operator's Control Box - This metal control station is mounted at the right front of the platform. It contains the following controls:

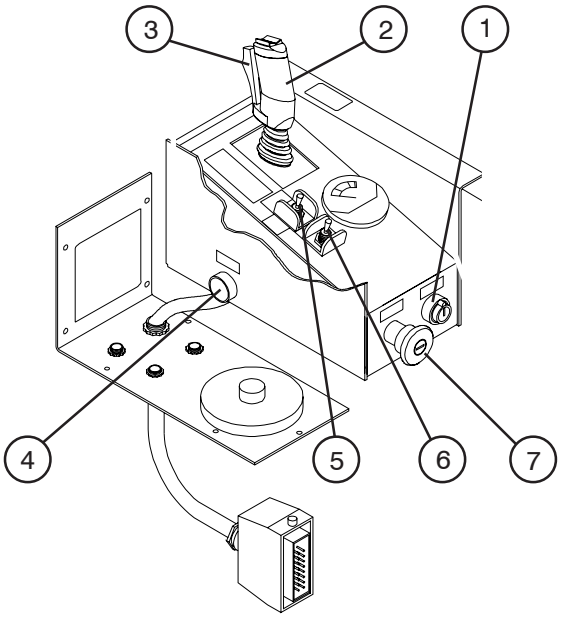

Figure 2-10. Operator's Control Box

1. **OFF/ON Key Switch** - Disconnects or energizes the control circuit in the operator's control box.

2. **LIFT/DRIVE/STEER Controller** - A one-hand toggle-type lever to control lift/drive and steer motions. Internal springs return it to neutral when stick is released.

3. **LIFT/DRIVE/STEER Enable Trigger Switch** - This momentary switch energizes the proportional controller. It must be held depressed continuously while engaging either the lift/drive or steer functions.

4. **Horn Push-Button** - Located on the side of the operator's control box, this push-button switch, when depressed, sounds an automotive-type horn.

5. **HIGH/NORMAL Torque Select Toggle Switch (If Equipped)** - This switch selects "HIGH" torque (low speed) or "NORMAL" torque (high speed).

6. **LIFT/OFF/DRIVE Select Toggle Switch (If Equipped)** - Selecting "OFF" position disconnects power from both lift and drive circuits. Selecting "LIFT" position energizes the lift circuit. Selecting "DRIVE" position energizes the drive circuit.

7. **Emergency Stop Button** - When depressed, this red "mushroom-head" push-button switch disconnects power to the control circuit.

2.2-12 AC Outlet on Platform

AC Outlet on Platform - This outlet is a source of 110V power on the platform.

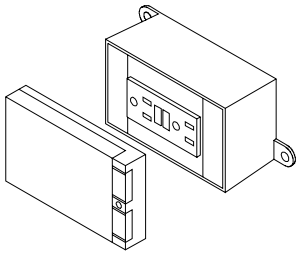

Figure 2-11. AC Outlet on Platform

2.2-13 Folding Guardrail System

Folding Guardrail System - This system, when folded down, reduces the height of the retracted aerial platform for transporting and traveling through doorways only.

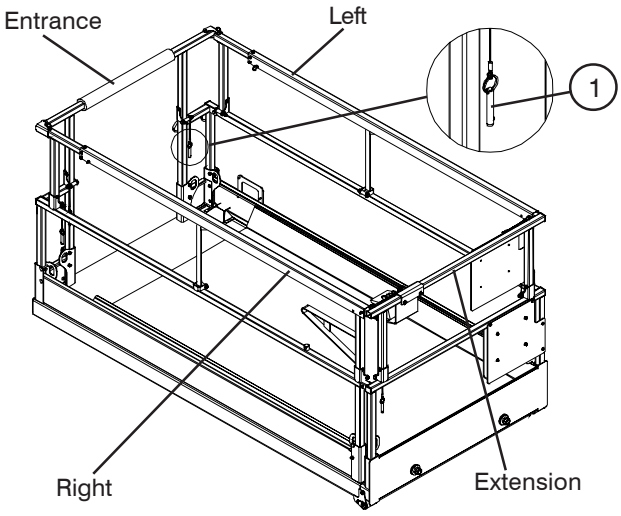

Figure 2-12a. Folding Guardrail System

1. **Guardrail Locking Pin with Lanyard** - This pin is used to lock the guardrail in place.

Warning

The scissor assembly must be fully lowered before raising or lowering the guardrails.

To fold the guardrail system down:

1. Remove the operator's control box and outrigger controls (if equipped) and lay it down on the platform.
2. Remove all locking pins.
3. Fold down the guardrails in the following order: right-hand side, left-hand side, entrance, and extension (refer to Figure 2-12a).
4. Lock in place on the mounting post using the locking pin (refer to Figure 2-12b). Ensure that the detent ball of the pin is all the way through.

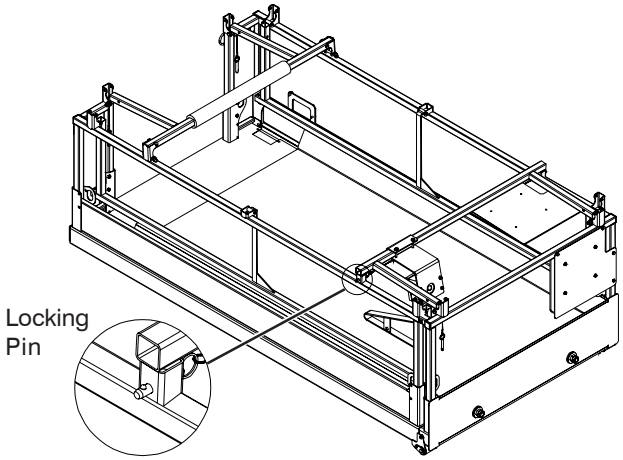

Figure 2-12b. All Guardrails Folded Down

To raise the guardrail system up:

1. Remove all locking pins.
2. Swing up the guardrails in the following order: extension, entrance, left-hand side and right-hand side.
3. Lock each guardrail in place with the locking pins ensuring that the detent ball of each pin is all the way through. See Figure 2-12b.
4. Mount the operator's control box and outrigger controls (if equipped) at the front right of the platform. Lock them in place.

Warning

Before operating this aerial platform check the guardrail system for loose or missing locking pins. The guardrail system must be upright and all pins must be locked in place. Death or serious injury could result if the guardrail system is not upright or properly locked.

2.2-14 Lanyard Attachment Ring

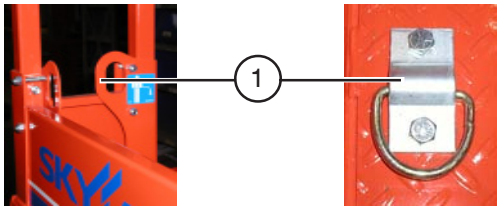

Figure 2-13. Lanyard Attachment Ring

1. **Lanyard Attachment Ring** - Use this ring as an attachment point for safety belt/harness tethers. DO NOT attach belts/harnesses to any other point on the platform. **DO NOT** use this ring to lift, anchor, secure or support the platform or any other apparatus or material.

Warning

The lanyard attachment ring is used for travel restraint, within the limits of the platform only. **It is not a fall arresting device!** Use as such could result in death or serious injury.

2.3 Component Identification (Special Options)

This section describes the components that are optional to aerial platforms.

2.3-1 Powered Extension Deck Control Box (If Equipped)

This metal control box is mounted on one of the extension platform guardrails. It contains the following controls:

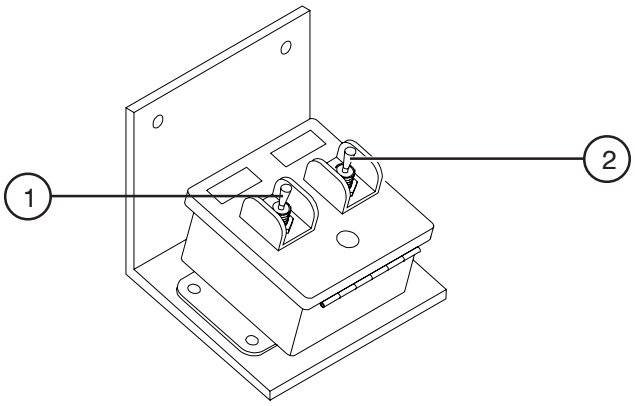

Figure 2-14. Powered Extension Deck Control Box

1. **Enable Switch** - This switch, when activated and held allows the extension deck extend/retract switch functions to operate.

2. **EXTEND/RETRACT Switch** - This switch, when activated, extends or retracts the powered extension deck. Refer to Section 2.5-11 on how to extend/retract the powered extension deck.

2.3-2 1500W AC Inverter (If Equipped)

Inverter - The inverter is located on the base of the machine. It has the following controls:

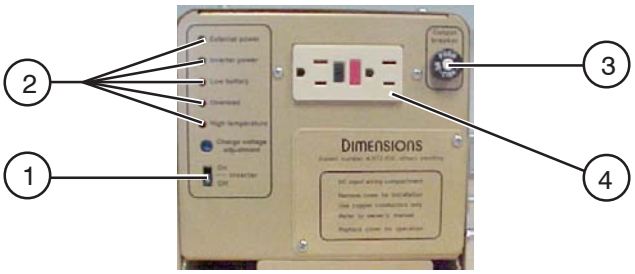

Figure 2-15. 1500W AC Inverter

Note
The inverter operation is automatic. These controls do not need to be manipulated for normal operation.

1. **ON/OFF Switch** - This diagnostic slide switch will activate or terminate inverter operation. It should remain in the “ON” position.

2. **Status LEDs** - These LEDs indicate the operating or fault status of the inverter .

3. **15 Amp Circuit Breaker** - In the event of a power overload or circuit grounding, the circuit breaker will pop out. Press the breaker back in to reset.

4. **GFCI Outlet** - During inverter operation, this outlet provides AC power.

2.4 Setup Procedure

The following are descriptions of normal operating procedures. A qualified operator **MUST** read and completely understand these descriptions before operating this aerial platform.

1. Before a new aerial platform is put into operation it must be carefully inspected for any evidence of damage resulting from shipment and inspected periodically thereafter. Refer to Table 2-5, Maintenance and Inspection Schedule.

2. Remove all packing materials and inspect for damage incurred during transport. Report any damage to delivery carrier immediately.

3. Inspect aerial platform thoroughly and remove any foreign objects.

4. Raise all guardrails to their upright position and lock in place with locking pins. Refer to Section 2.2-13.

Warning

Before operating this aerial platform check the guardrail system for loose or missing locking pins. The guardrail system must be upright and all pins must be locked in place. Death or serious injury could result if the guardrail system is not upright or properly locked.

5. Ensure the emergency main power disconnect switch is switched to the "OFF" position.

6. Remove the operator's control box from its shipping container and secure it to the guardrail at the right front of the platform.

7. Attach the control cable and power extension deck cable **(if equipped)** to the machine's control cable.

8. Move the aerial platform to a firm, level test area where the platform can be later vertically extended to its maximum working height. If the aerial platform is to be pushed, towed or winched, refer to Section 2.7 for winching and towing procedures.

9. Unlock and swing out the hydraulic/electric tray.

10. Check the tank's hydraulic oil level (scissor assembly must be fully lowered). Level should be at or slightly above the top mark on the sight glass.

Note

If required, add a quality grade hydraulic oil such as ATF Dexron III (ESSO). Never mix hydraulic oils.

11. Close the hydraulic/electric tray.

12. Unlock and swing out the battery tray.

13. Check the battery fluid level. If fluid level is not at FULL mark on the battery, add distilled or demineralized water only.

Warning

Explosion Hazard
Keep flames and sparks away.
Do not smoke near batteries.



Warning

Battery Acid Is Extremely Corrosive
Wear proper eye and facial protection as well as appropriate protective clothing.
If contact occurs, immediately flush with cold water and seek medical attention.

14. Connect the AC battery charger cord to the proper AC voltage source and charge the batteries. Refer to Section 2.9-2 for battery charging procedures. When charger cycle is complete, disconnect battery charger AC cord.

15. Close the battery tray.

16. From the base controls, carefully raise the platform. Refer to Section 2.5-3 for procedure to raise the platform.

17. Unlatch and carefully swing down the maintenance support. Refer to Section 2.2-10 for procedure to properly position the maintenance support.

Warning

The maintenance support must be used during inspection and maintenance or repairs are to be performed within the lifting mechanism. Failure to avoid this hazard could result in death or serious injury.

18. From the base controls, carefully lower the platform until the scissor assembly is firmly resting on the maintenance support. For procedure on how to lower the platform refer to Section 2.5-4 .

19. Inspect all hoses, fittings, wires, cables, valves, etc. for leaks, loose or missing parts, hidden damage and foreign material.

20. Raise the platform until there is an adequate clearance to swing up maintenance support and lock in position.

21. Raise the platform to the maximum extension height.

Warning

Be aware of overhead obstructions or other possible hazards around the machine when lifting.

22. Fully lower the platform.

2.5 Start Operation

Carefully read and completely understand ALL of this Operating Manual and ALL warnings and instruction labels on the aerial platform.

Before operating this aerial platform, perform the pre-start inspection and the tasks on the operator's check-list as described in this section.

2.5-1 Pre-Start Inspection

It is the responsibility of the operator to perform a pre-start inspection.

The pre-start inspection is a visual inspection performed by the operator prior to each work shift.

1. Ensure that there are no obstacles around the aerial platform and in the path of travel such as holes, drop offs, debris, ditches and soft fill.
2. Ensure that there are no electrical cords and hoses in the path of travel.
3. Ensure that the batteries are fully charged. Disconnect the AC charger cord from the external power source.
4. Ensure that both battery and hydraulic/electric trays are closed and locked.
5. Ensure that the free-wheeling valve is fully closed.
6. Make sure all guardrails and locking pins are in place and locked in position.
7. Make sure you do not climb or descend a grade steeper than 23% (3215 & 3219) or 25% (3220, 3226, 4620, 4626, 4632, 6826 & 6832). Elevated driving must only be done on firm level surfaces.
8. Check overhead clearances.

Warning

Do not use or operate the aerial platform if any component appears to be altered, damaged or if it is tagged or locked out for non-use or repair. Operation of aerial platform while in any of the above states may result in death or serious injury.

Warning

Do not operate this aerial platform without proper authorization and training.
Failure to avoid this hazard could result in death or serious injury.

2.5-2 Operator's Checklist

It is the user's responsibility to inspect the machine operation before the start of each shift:

1. Operating and emergency controls.
2. Safety devices and limit switches.
3. Personal protective devices.
4. Tires and wheels.
5. Outriggers **(if equipped)** and other structures.
6. Air, hydraulic and fuel system(s) for leaks.
7. Loose or missing parts.
8. Cables and wiring harnesses.
9. Placards, warnings, control markings and operating manuals.
10. Guardrail system including locking pins.
11. Engine oil level **(if equipped)**.
12. Battery fluid level.
13. Hydraulic reservoir level.
14. Coolant level **(if equipped)**.
15. Parking brakes (check operation).

Warning

An operator should not use any aerial platform that:

- does not appear to be working properly.
- has been damaged or appears to have worn or missing parts.
- has alterations or modifications not approved by the manufacturer.
- has safety devices which have been altered or disabled.

Failure to avoid these hazards could result in death or serious injury.

2.5-3 To Raise the Platform using the Base Controls

Warning

Be aware of overhead obstructions or other possible hazards around the machine when lifting.

1. Turn the emergency main power disconnect switch to "ON" position.
2. **Models 32xx and 46xx:**
   Press and hold the base enable switch. Raise the platform by turning the platform UP/DOWN select switch to the "⇧" (UP) position from the base controls.

   Models 68xx:
   Raise the platform by selecting "⇧" (UP) with UP/DOWN toggle switch from the hydraulic/electric tray.

2.5-4 To Lower the Platform using the Base Controls

1. **Models 32xx and 46xx:**
   Press and hold the base enable switch. Lower the platform by turning the platform UP/DOWN select switch to the "⇩" (DOWN) position from the base controls.

   Models 68xx:
   Lower the platform by selecting "⇩" (DOWN) with the UP/DOWN toggle switch from the hydraulic/electric tray.

2.5-5 To Raise the Platform using the Operator's Control Box

1. Turn the emergency main power disconnect switch to "ON" position.

Warning

Ensure that you maintain three points of contact when using the ladder to mount/dismount the platform.

2. Use the ladder of the aerial platform to access the aerial platform deck.
3. Close the gate/chain.

Warning

Be aware of overhead obstructions or other possible hazards around the machine when lifting.

4. Ensure the emergency stop button is pulled out.
5. Turn OFF/ON key switch to "ON" position.
6. Select "LIFT" position with LIFT/OFF/DRIVE select toggle switch.
7. Activate and hold the enable trigger switch by squeezing it towards the joystick.
8. Push the proportional controller handle forward until desired height is reached.

9. Return the joystick to the neutral center position to stop. Release the enable trigger switch.

Warning

To protect against unintended movement of the aerial platform, push in the emergency stop button after you have arrived at your desired location or elevation.

Note

If the tilt alarm sounds and the platform does not, or only partially raises, immediately lower the platform and ensure that the machine is on a firm **LEVEL** surface.

2.5-6 To Lower the Platform using the Operator's Control Box

Warning

Do not lower the platform unless the area below is clear of personnel and obstructions.

1. Ensure the emergency stop button is pulled out.
2. Turn OFF/ON key switch to "ON" position.
3. Select "LIFT" position with the LIFT/OFF/DRIVE select toggle switch.
4. Activate and hold the enable trigger switch by squeezing it towards the joystick.
5. Pull the proportional controller handle backward until desired height is reached.

Note

Lowering is not proportional.

6. Return the joystick to the neutral center position to stop. Release the enable trigger switch.

Warning

To protect against unintended movement of the aerial platform, push in the emergency stop button after you have arrived at your desired location or elevation.

2.5-7 To Drive Forward or Backward

Warning

Be aware of blind spots when operating the aerial platform.

Warning

Ensure that there are no personnel or obstructions in the path of travel, including blind spots.

1. Ensure the emergency stop button is pulled out.
2. Select "DRIVE" position with the LIFT/OFF/DRIVE select toggle switch.
3. Activate and hold the enable trigger switch by squeezing it towards the joystick.
4. Push or pull the proportional controller handle forward or backward to the desired speed and direction of platform travel.
5. Return the proportional controller to the neutral center position to stop. Release the enable trigger switch.

Warning

To protect against unintended movement of the aerial platform, push in the emergency stop button after you have arrived at your desired location or elevation.

2.5-8 To Steer

1. Select “DRIVE” position with the LIFT/OFF/DRIVE select toggle switch.

2. Activate and hold the enable trigger switch by squeezing it towards the proportional controller, then press the rocker on top of the controller in the direction you wish to steer.

Warning

Steering is not proportional. It is not self-centering and will remain in the selected orientation. Driving and steering may be active at the same time.

2.5-9 To Select Drive Torque (If Equipped)

1. **High Torque:** Select “HIGH” position with the HIGH/NORMAL torque select toggle switch to select high torque (low speed). This torque setting is used when climbing grades or when loading or unloading the aerial platform.

Warning

Machine must be in fully retracted position when operated on any grade. Driving while elevated on any grade may result in death or serious injury.

2. **Normal Torque:** Select “NORMAL” position with the HIGH/NORMAL torque select toggle switch to select normal torque (high speed). This torque setting is used when travelling on a level surface with the platform fully lowered.

Warning

Ensure that there are no personnel or obstructions in the path of travel, including blind spots.

2.5-10 To Extend/Retract the Manual Extension Deck

1. To extend/retract the manual extension deck, remove the retaining locking pins and push/pull the extension deck using the push bar or sliding handrails to one of four or five desired locking positions.

2. Upon extension or retraction, reinsert the locking pins. Insert the pin on one side of the machine in front of the upright bar and the pin on the other side of the machine behind the upright bar to prevent accidental movement, in either direction, of the manual extension platform during travel or transport. Refer to Figure 2-16 for a configuration example.

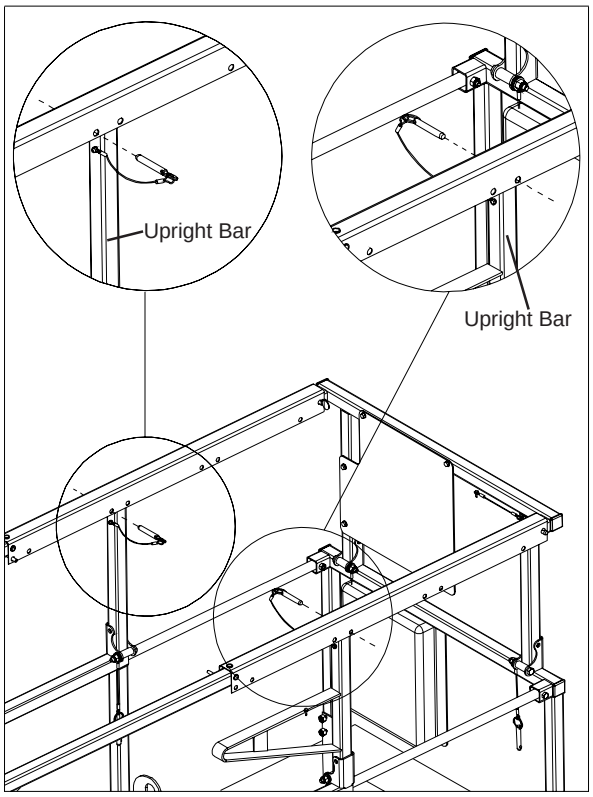

Figure 2-16. Variable Position Manual Extension Deck

2.5-11 To Extend/Retract the Powered Extension Deck (If Equipped)

1. To extend the powered extension deck, ensure the emergency stop button is pulled out.
2. On the operator's control box, select "LIFT" position with LIFT/OFF/DRIVE select toggle switch.
3. On the powered extension deck control box, press and hold the enable switch, then push the EXTEND/RETRACT switch to the "⇧" (EXTEND) position until desired extension is reached. Release switch to stop.
4. To retract the platform, ensure the emergency stop button is pulled out and select "LIFT" position using the LIFT/OFF/DRIVE select toggle switch.
5. On the powered extension deck control box, press and hold the enable switch, then push the EXTEND/RETRACT switch to the "⇩" (RETRACT) position until desired extension is reached. Release switch to stop.

Note

All models are drivable with any extension platform extended 3 feet or less. An interlock limit switch cuts out drive when the platform is extended beyond 3 feet on some models.

Warning

To protect against unintended movement of the aerial platform, push in the emergency stop button after you have arrived at your desired location or elevation.

2.5-12 Electrical Inverter (If Equipped)

1. Turn the emergency main power disconnect switch to the "ON" position.
2. Make sure the ON/OFF switch of the inverter is "ON".
3. Inverter activation is indicated by a glowing green LED on the front of the inverter.

Caution

The emergency main power disconnect switch MUST be turned OFF at the end of the shift or the batteries will drain.

2.5-13 Shutdown Procedure

1. Completely lower the platform.
2. Push in emergency stop button located on operator's control box.
3. Turn OFF/ON key switch to "OFF" position and remove the key from the control box.

Warning

Ensure that you maintain three points of contact when using the ladder to mount/dismount the platform.

4. Dismount the platform using the ladder.
5. Turn emergency main power disconnect switch to "OFF" position.

2.6 Loading/Unloading

KNOW all national, state/provincial and local rules which apply to your loading/unloading of aerial platforms.

Only qualified personnel shall operate machinery during loading/unloading.

Be sure vehicle capacity and loading equipment hoists, chains, straps etc. are sufficient to withstand maximum aerial platform weight.

The transport vehicle must be parked on a level surface and must be secured to prevent rolling while the aerial platform is being loaded or unloaded.

2.6-1 Lifting

When it is necessary to lift the Skyjack aerial platform the following conditions must be met:

- The platform must be fully lowered.
- The emergency main power disconnect switch must be in the “OFF” position.
- The hydraulic/electric and battery trays must be closed and securely latched.
- The extension deck must be retracted and secured.
- The control box must be secured to the railings or removed.
- The platform must be cleared of all personnel, tools, and materials.
- The lifting/rigging may be attached to all four lifting points as illustrated in Figure 2-17.

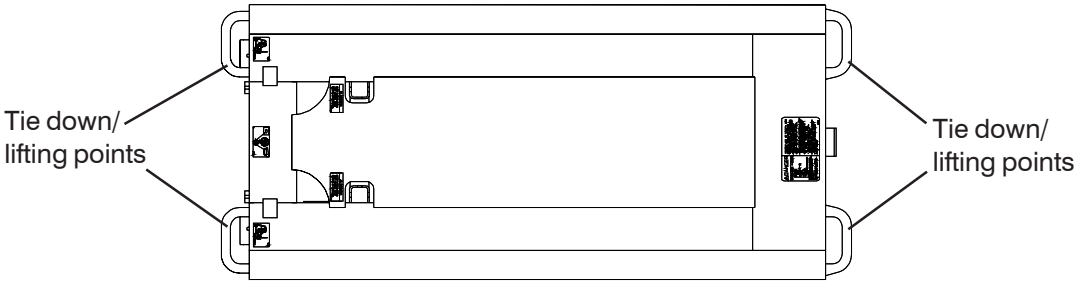

Figure 2-17. Tie Downs/Lifting Points

Note

The mass of the aerial platform is as per Table 2-1a or Table 2-1b. The center of gravity is approximately located in the middle of the aerial platform, front to back and side to side, as illustrated in Figure 2-18. Vertically, the center of gravity is approximately just above the base chassis.

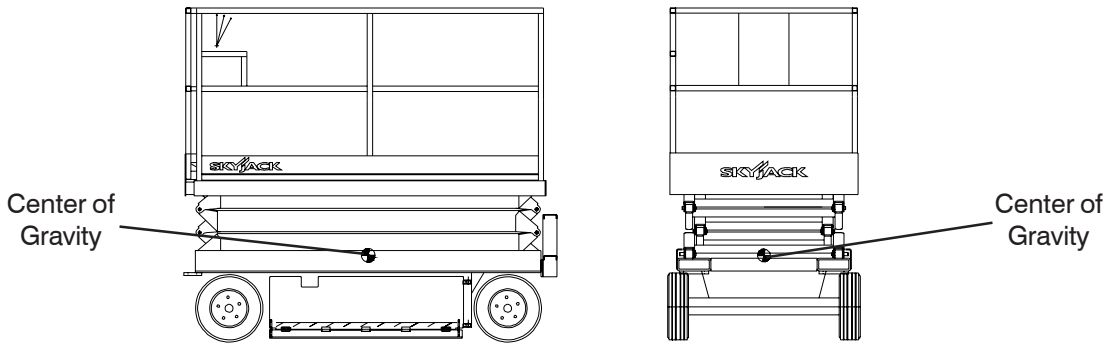

Figure 2-18. Center of Gravity

Note

The aerial platform can be lifted with a forklift from the sides but Skyjack does not recommend this use. Lift with forks in designated pockets as illustrated in Figure 2-19.

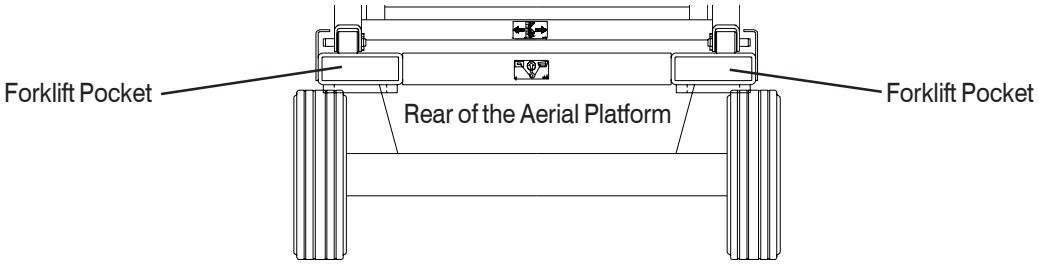

Figure 2-19. Forklift Pockets

2.6-2 Driving

When driving the aerial platform:

- Ramp or dock capacity should be sufficient to withstand maximum machine weight.
- Ramp should be equipped with side guards to prevent inadvertent fall from the ramp.
- Incline should not exceed machine gradeability (refer to Table 2-1a or Table 2-1b).
- Aerial platform brakes should be checked for proper operation.
- Aerial platform speed should be on high torque setting (if equipped) and batteries fully charged (electric machines).

Warning

When transporting, the aerial platform must be secured to the truck or trailer deck. Tie downs are available as illustrated in Figure 2-17.

2.7 Winching and Towing Procedures

This section provides the operator with procedures about towing and winching and on how to manually release the parking brakes.

Warning

Ensure platform is fully lowered before winching or towing. Sudden motion could cause the aerial platform to become unstable.
Death or serious injury could result.

Warning

In emergency situations where machine functions are not available and lowering is impeded by an obstacle, the utmost care must be taken to move the machine far enough to clear the obstacle. In such cases operation must be extremely smooth with no sudden movements and must not exceed a speed of 2”/sec.

Warning

When pushing, towing or winching, do not exceed 2 mph (3.2 km/h).

Warning

Do not push, tow or winch vehicle on to a slope, or brake the towing vehicle rapidly. Do not pull the aerial platform down an incline towards a winch.

2.7-1 To Release the Free-Wheeling Valve

1. Make sure that the aerial platform is on level ground. Chock or block the wheels to keep aerial platform from rolling.

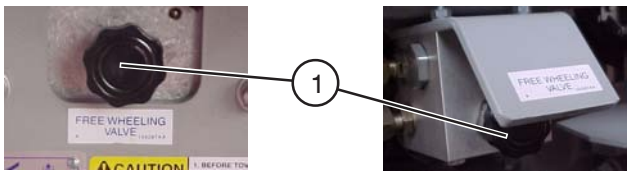

Figure 2-20. Free-Wheeling Valve

2. **Free-Wheeling Valve** - Turning the valve knob counterclockwise (item 1) to a fully opened position allows fluid to flow through the wheel motors, thus providing “free-wheeling”.

Warning

The free-wheeling valve MUST be closed tightly (clockwise) for normal operation.

2.7-2 To Release the Parking Brakes Manually

Releasing the brakes manually depends on the parking brake system that is provided on the aerial platform.

Warning

Do not manually disengage the parking brakes if the aerial platform is on a slope.

2.7-2a Pin Brakes System

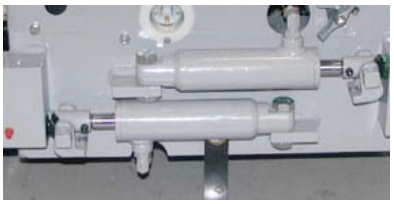

Figure 2-21. Parking Brakes

Parking Brakes - The brakes MUST be manually disengaged for pushing, towing or winching.

1. Make sure that the aerial platform is on level ground. Chock or block the wheels to keep aerial platform from rolling.
2. Turn emergency main power disconnect switch to “OFF” position.
3. **For Left-Side Brake:** Using a 3/4" (19 mm) wrench, rotate the block on the brake pin 90° clockwise. The brake pin should be clear of the brake disc.
4. **For Right-Side Brake:** Using a 3/4" (19 mm) wrench, rotate the block on the brake pin 90° counterclockwise. The brake pin should be clear of the brake disc.
5. Remove the wheel chocks or blocks, then push, tow or winch the aerial platform to the desired location.

Warning

The parking brake **MUST** be re-engaged immediately after reaching the desired location.

6. Position the machine on a firm and level surface.
7. Chock or block the wheels to prevent the aerial platform from rolling.
8. Re-engage the parking brake by doing the following steps.
9. **For Left-Side Brake:** Using a 3/4" (19 mm) wrench, rotate the block on the brake pin 90° counterclockwise.
10. **For Right-Side Brake:** Using a 3/4" (19 mm) wrench, rotate the block on the brake pin 90° clockwise.
11. Close the free-wheeling valve.

2.7-2b Disc Brakes System



Figure 2-22. Parking Brakes

Parking Brakes - The brakes MUST be manually disengaged for pushing, towing or winching.

1. Make sure that the aerial platform is on level ground. Chock or block the wheels to keep aerial platform from rolling.
2. Turn emergency main power disconnect switch to “OFF” position.
3. Locate the brake manifold at the rear of the base.
4. Push in the brake plunger (black knob).
5. Grasp the red hand pump plunger and rapidly depress until firm resistance is felt. The brake is now released.
6. Remove the wheel chocks or blocks, then push, tow or winch the aerial platform to the desired location.

Warning

The parking brake **MUST** be re-engaged immediately after reaching the desired location.

7. Position the machine on a firm and level surface.

8. Chock or block the wheels to prevent the aerial platform from rolling.

9. Re-engage the parking brake by pulling out the black brake valve plunger.

10. Close the free-wheeling valve.

2.8 Emergency Lowering Procedure

This section guides the operator on how to use the emergency lowering system. This system allows platform lowering in the event of an emergency or an electrical system failure.

Warning

Keep clear of scissors mechanism when using emergency lowering valve.

1. Remove any obstructions from a descending platform.

2. The extension platform(s) may need to be retracted or the platform may need to be moved to clear the obstruction. Refer to Section 2.7, “Winching and Towing Procedures”, for proper instructions.

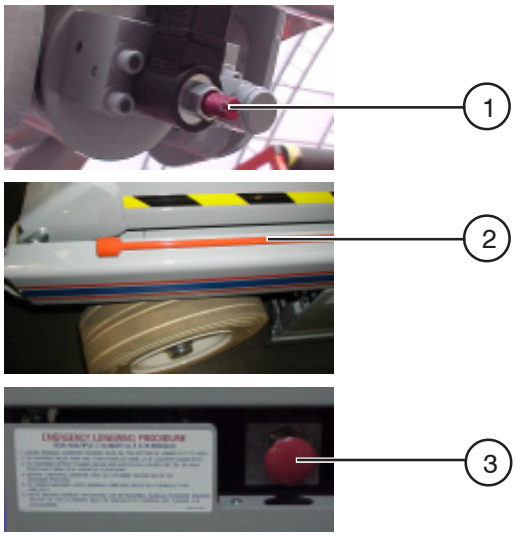

Figure 2-23. Emergency Lowering System

3. Locate the holding valve manual override knob (item 1) at the base of each lift cylinder. Depress and turn counterclockwise. If necessary, use the access rod (item 2) that is located on the base of the machine.

4. On the hydraulic/electric tray, pull out and hold the emergency lowering valve (item 3) to lower the platform.

2.9 Battery Maintenance

This section provides the operator with procedures on how to service and charge the battery. This also provides charger operation instructions.

2.9-1 Battery Service Procedures

Warning

Explosion Hazard
Keep flames and sparks away.
Do not smoke near batteries.



Warning

Battery acid is extremely corrosive
Wear proper eye and facial protection as well as appropriate protective clothing.
If contact occurs, immediately flush with cold water and seek medical attention.

1. Turn emergency main power disconnect switch to “OFF” position.
2. Check battery case for damage.
3. Check battery fluid level in each battery. If plates are not covered by at least 1/2” (13mm) of solution, add distilled or demineralized water.
4. Clean battery terminals and cable ends thoroughly with a terminal cleaning tool or wire brush.
5. Make sure all battery connections are tight.
6. Replace any battery that is damaged or incapable of holding a lasting charge.
7. Do not use any batteries other than flooded lead-acid batteries of the proper AH rating.

Warning

Use original or equivalent to the original parts and components for the aerial platform.

2.9-2 Battery Charging Operation

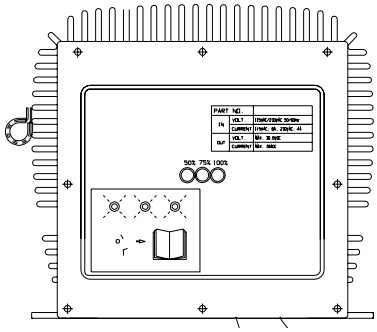

Figure 2-24. Battery Charger

Danger

Risk of electric shock
Do not immerse the charger in water.
Though the charger is highly resistant to water, it is not designed for immersion and an electric shock can occur.

1. Provide adequate ventilation for the batteries and charger. The convection cooled design requires access to cooling air for proper operation. Do not allow blankets or other materials to cover the charger. Although the charger protects itself against overheating, the charger cooling fins should be cleaned if clogged with debris for best performance.

Warning

There could be a spark during charging. Be careful when using fuels, solvents or other flammables near the charger or batteries.

2. Connect the power supply cord to a properly grounded 100V/50 or 60Hz, 115V/50 or 60Hz, or 230V/50 or 60Hz socket. This charger automatically senses and adjusts to the AC input voltage range.

Caution

When changing the input voltage wait until all the LEDs are OFF or wait a minimum of 20 seconds before switching on the new voltage.

3. The charging time is affected by numerous factors including battery Amp-Hour capacity, depth of discharge, battery temperature, and battery condition (new, old or defective). Batteries larger than 240 Ah can be recharged but will take longer.

Danger

Do not disconnect the DC output wires near the batteries when the charger is ON. The resulting arcing could cause the batteries to explode.
If the charger must be disconnected, first disconnect the AC power supply cord from its outlet, then disconnect the charger DC connections.

Danger

Risk of an electric shock
Do not touch un-insulated parts of the charger output wires, battery connector, or battery terminals.

Danger

Visually and manually inspect to verify the DC output wires and terminals are in good working condition before each use.

4. The charger will start automatically within four to six seconds. The charger will start even with severely discharged batteries (down to 1V terminal voltage). Once charging starts, the LEDs indicate the charging progress.

Charging State LED

State of charge	1ST LED	2ND LED	3RD LED
0 to 50%	Blinking	Off	Off
50% to 75%	On	Blinking	Off
75% to 100%	On	On	Blinking
100%	On	On	On

60133AA

The charger goes into an equalizing charge mode after the batteries are charged and all 3 LEDs are “ON”. The charger will continue to charge at a low current then shut-off automatically when complete.
If all 3 LEDs blink together, there is a problem.

Take proper action according to the following instructions:

3 LEDs blink once simultaneously:
Output connection error. Check the battery and charger connection. The output may not be connected to the batteries or the connections to the batteries may have corroded or loosened. The output may be shorted due to improper connection to the batteries or pinched wires. The output may be connected in reverse polarity to the batteries. The charger is not damaged by any of these problems.

3 LEDs blink twice simultaneously:
The charger is indicating that the AC voltage is too low or too high. Check the AC input voltage.

3 LEDs blink three times simultaneously:
Charger is overheated. No action required. When the charger cools, charging will re-start automatically. Check and correct for dirt or other debris on charger that may be reducing cooling.

3 LEDs blink four times simultaneously:
Input or output over current. No action required, charger will correct and re-start automatically.

100% LED lamp blinks:
Charger 18 hour timer has timed out due to battery problem.

Batteries do not fully charge.
If the batteries are charged overnight, make sure the AC supply is not being switched-off at night with other building items. Check battery condition and for dead cells or reduced capacity. Replace charger only if other problems are not found.

The AC line circuit breaker or fuse is blown.
A defective circuit breaker or fuse, an overloaded circuit, or a charger problem can cause this condition. Try connecting the charger to a different AC outlet (on a different circuit) in the building. If the AC supply checks good, the charger should be replaced.

EE-Rated Machines

Warning

Do not charge batteries in hazardous area!
The EE-rating of a machine does not include the charging of batteries.

1. Move the aerial platform to an area designated for battery charging. Refer to NFPA 505 for charging set-up. NFPA 505 is a publication of the **National Fire Protection Association, Inc.,** Batterymarch Park, Quincy, MA 02269 (USA).

2. Connect battery charger DC plug into the battery tray.

3. Charge batteries. Refer to Section 2.9-2 for battery charging operation. When charge cycle is completed, disconnect charger plug from battery tray.

Table 2-1a. Specifications and Features

MODEL		3215	3219	3220	3226
Weight Ω		2400 lb.	2580 lb.	3510 lb.	4135 lb.
Width		32.0”		32.9”	
Length		70.0”		91.5”	
Platform Size		26” x 62”		28” x 84”	
Height	Stowed Platform	34.7”	39.2”	38.0”	45.1”
	Platform Elevated	15’	19’	20’	26’
	Working	21’	25’	26’	32’
Stowed Height Railings Up	ANSI	74”	78.4”	77.5”	84.7”
	CSA			79.75”	87”
Drive Height (All Standards)		FULL			
High Travel Speed		2 mph			2.4 mph
Elevated Drive Speed		0.65 mph		.64 mph	.66 mph
High Torque Drive Speed		N/A		1.2 mph	1.33 mph
Lift time (No Load)		18 sec.	20 sec.	27 sec.	43 sec.
Lower Time (No Load)		32 sec.	39 sec.	41 sec.	53 sec.
Lift Time (Rated Load)		23 sec.	25 sec.	33 sec.	56 sec.
Lower Time (Rated Load)		24 sec.	29 sec.	29 sec.	42 sec.
Gradeability		23%		25%	
Tires		12 x 4 x 8		16 x 5 x 12	
		Solid Rubber			

60156AJ-ANSI

Ω Weight with standard 3’ extension platform. (Refer to nameplate for machines with 5’ or 6’ extension platform.)

Table 2-1b. Specifications and Features

MODEL		4620	4626	4632	6826	6832
Weight Ω		4100 lb.	4700 lb.	5075 lb.	5380 lb.	5680 lb.
Width		46”			68”	
Length		91”			99.25”	
Platform Size		42” x 83”			60” x 81”	
Height	Working	26’	32’	38’	32’	38’
	Platform Elevated	20’	26’	32’	26’	32’
	Fixed Railing	77.25”	84.5”	88”	93.6”	99”
	Platform Lowered	38”	45”	48.5”	50”	55.3”
Drive Height		20’	26’*	32’	26’	32’
High Travel Speed		2 mph				
Elevated Drive Speed		0.56 mph				0.4 mph
High Torque Drive Speed		1 mph				
Lift time (No Load)		24 sec.	48 sec.	50 sec.	N/A	58 sec.
Lower Time (No Load)		48 sec.	45 sec.	62 sec.	N/A	63 sec.
Lift Time (Rated Load)		32 sec.	54 sec.	59 sec.	65 sec.	60 sec.
Lower Time (Rated Load)		32 sec.	32 sec.	49 sec.	57 sec.	51 sec.
Gradeability		25%				
Tires		16 x 5 x 12 Solid Rubber			23 x 10.5 x 12 Foam Filled[1]	

60246AH-ANSI

* 24’ with Dual Power

Ω Weight with standard 3’ extension platform. Refer to Serial Nameplate for specific applications.
(Refer to nameplate for machines with 5’ or 6’ extension platform.)

[1] Fill Hardness: 55 Durometer

Table 2-2. Floor Loading Pressure

MODEL		TOTAL MACHINE WEIGHT	TOTAL MACHINE LOAD		
			WHEEL	LCP**	OUP**
		lbs	lbs	psi	psf
3215	min*	2400	960	100	160
	max*	3000	1200	110	200
3219	min*	2580	1032	100	170
	max*	3130	1252	110	210
3220	min*	3490	1396	110	175
	max*	4840	1936	130	245
3226	min*	4110	1644	120	210
	max*	4610	1844	130	235
4620	min*	4100	1464	191	146
	max*	5620	1904	223	199
4626	min*	4790	1948	211	171
	max*	5340	2288	235	191
4632	min*	5068	2112	208	180
	max*	5768	1392	220	204
6826	min*	5220	2088	78	112
	max*	6420	2568	84	137
6832	min*	5870	2348	82	125
	max*	7070	2828	94	151

60354AE-ANSI

* **min** - Total machine weight with no options
max - Machine weight + all options + full capacity

** **LCP** - **Locally Concentrated Pressure** is a measure of how hard the machine presses on the areas in direct contact with the floor. The floor covering (tile, carpet, etc.) must be able to withstand more that the indicated values above.
OUP - **Overall Uniform Pressure** is a measure of the average load the machine imparts on the whole surface directly underneath it. The structure of the operating surface (beams, etc.) must be able to withstand more than the indicated values above.

NOTE:
The **LCP** or **OUP** that an individual surface can withstand varies from structure to structure and is generally determined by the engineer or architect for that particular structure.





Floor Loading Pressure

Local Concentrated Pressure (LCP):

Foot Print Area = Length x Width

$$\textbf{LCP} = \frac{\text{Weight of Machine + Capacity (lb)}}{\text{Foot Print Area x 4 (Tires)}}$$

Overall Uniform Pressure (OUP):

Base Area = Length x Width

$$\textbf{OUP} = \frac{\text{Weight of Machine + Capacity (lb)}}{\text{Base Area}}$$

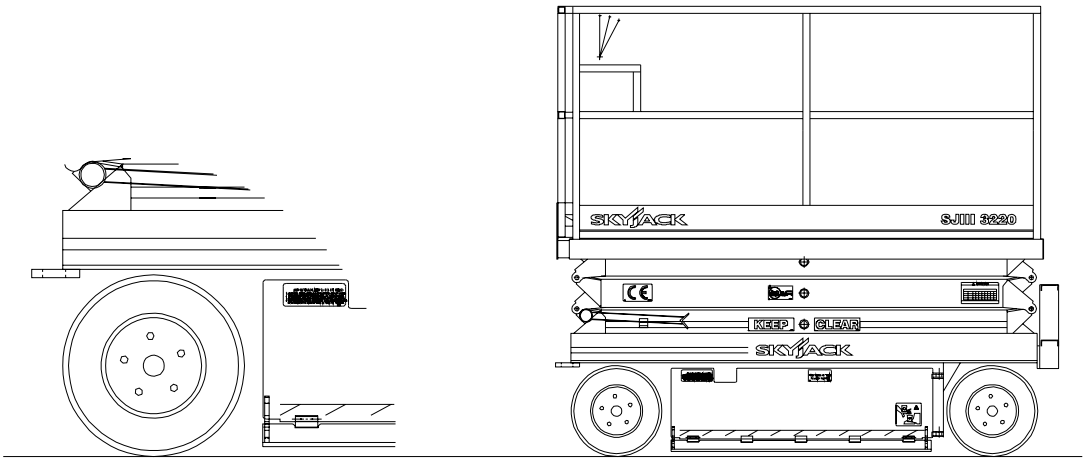

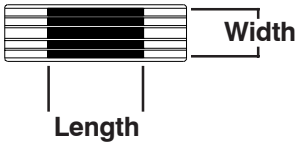

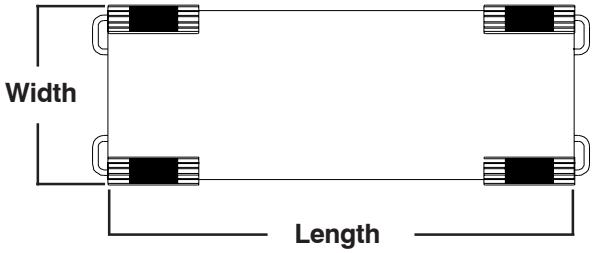

Warning

Intermixing tires of different types or using tires of types other than those originally supplied with this equipment can adversely affect stability. Therefore, replace tires only with the exact original Skyjack-approved type. Failure to operate with matched approved tires in good condition may result in death or serious injury.

Table 2-3 Owner's Annual Inspection Record

Model Number_____				Serial Number_____				
Recording Date								
Recording Year #	1	2	3	4	5	6	7	8
Owner's Name								
Inspected By								

60141AA

As described earlier in this section, this decal is located on the scissor assembly. It must be completed after an annual inspection has been completed. Do not use the aerial platform if an inspection has not been recorded in the last 13 months.

Table 2-4. Maximum Platform Capacities (Evenly Distributed)

MODEL	Manual Extension Platform				Powered Extension Platform			
	Total Capacity		Extension Capacity		Total Capacity		Extension Capacity	
3215	600 lb.	2 Person	250 lb.	1 Person	N/A			
3219	550 lb.	2 Person	250 lb.	1 Person	N/A			
3220	900 lb.	2 Person	300 lb.	1 Person	800 lb.	2 Person	300 lb.	1 Person
3226	500 lb.	2 Person	250 lb.	1 Person	N/A			
4620	1300 lb.	3 Person	300 lb.	1 Person	1300 lb.	3 Person	300 lb.	1 Person
4626	1000 lb.	3 Person	300 lb.	1 Person	1000 lb.	3 Person	300 lb.	1 Person
4632	700 lb.	2 Person	250 lb.	1 Person	N/A			
6826	1200 lb.	3 Person	300 lb.	1 Person	1000 lb.	3 Person	300 lb.	1 Person
6832	850 lb.	3 Person	300 lb.	1 Person	850 lb.	3 Person	300 lb.	1 Person

60315AE-ANSI

NOTE: Overall Capacity - Occupants and materials not to exceed rated load.

General Maintenance

Before attempting any repair work, disconnect the battery by turning the emergency main power disconnect switch to the "OFF" position. Preventative maintenance is the easiest and least expensive type of maintenance.

Table 2-5. Maintenance and Inspection Schedule

	Daily	Weekly	Monthly	3 Months	6 Months	12 Months*
Mechanical						
Structural damage/welds	A			A		A
Parking brakes	B			B		B
Tires/wheels & fasteners	A, B, C			A, B, C		A, B, C
Guides/rollers & slider pads	A, B, I			A, B, I		A, B, I
Railings/entry chains/gates	A, B, C			A, B, C		A, B, C
Bolts and fasteners	C			C		C
Maintenance support	B			B		B
Rust			A	A		A
Wheel bearings and king pins	A, B, E			A, B, E		A, B, E
Pothole protection device	A, B			A, B		A, B
Steering cylinder & tie rod				A, B, E		A, B, E
Electrical						
Battery fluid level	A			A		A
Control switches/indicator lights**	A, B			A, B		A, B
Cords, wiring & static strap	A			A		A
Battery terminals	A, C		A, C	A, C		A, C
Inverter/AC receptacle	A, B			A, B		A, B
Terminal and plugs	C			C		C
Limit switches	B			B		B
Hydraulic						
Hydraulic oil	H			H		H
Hydraulic hoses/fittings	A, L		C	A, L, C		A, C, L
Lift/lowering drive times				G		G
Cylinders		A, B		A, B		A, B
Emergency lowering system	B			B		B
Lift capacity			D	D		D
Hydraulic oil filter					F	F
Miscellaneous						
Labels & manual	A, J, K			A, J, K		A, J, K
Check for applicable service bulletins					A	A

Notes

A. Visually inspect.
B. Check operation.**
C. Check tightness.
D. Check relief valve setting. Refer to serial number nameplate.
E. Lubricate.
F. Replace.
G. Refer to Table 2-1a or Table 2-1b "Specifications and Features."
H. Check oil level.
I. Ensure there is no metal to metal contact with slider, slider side or running surface. Check for free movement of surface. Also check for free movement of the slider pin through the slider and pad.
J. Replace if missing or illegible.
K. Proper manual must be in box.
L. Check for leaks.
* Record inspection date and signature.
** Since the enable switch works in conjunction with lift/drive or steer function, to inspect operation of the joystick enable switch activate the steer controller once with activating the enable switch and once without activating the enable switch.

60028AG

Warning

Use original or equivalent to the original parts and components for the aerial platform.

Labels and Nameplates - Models 3215 & 3219

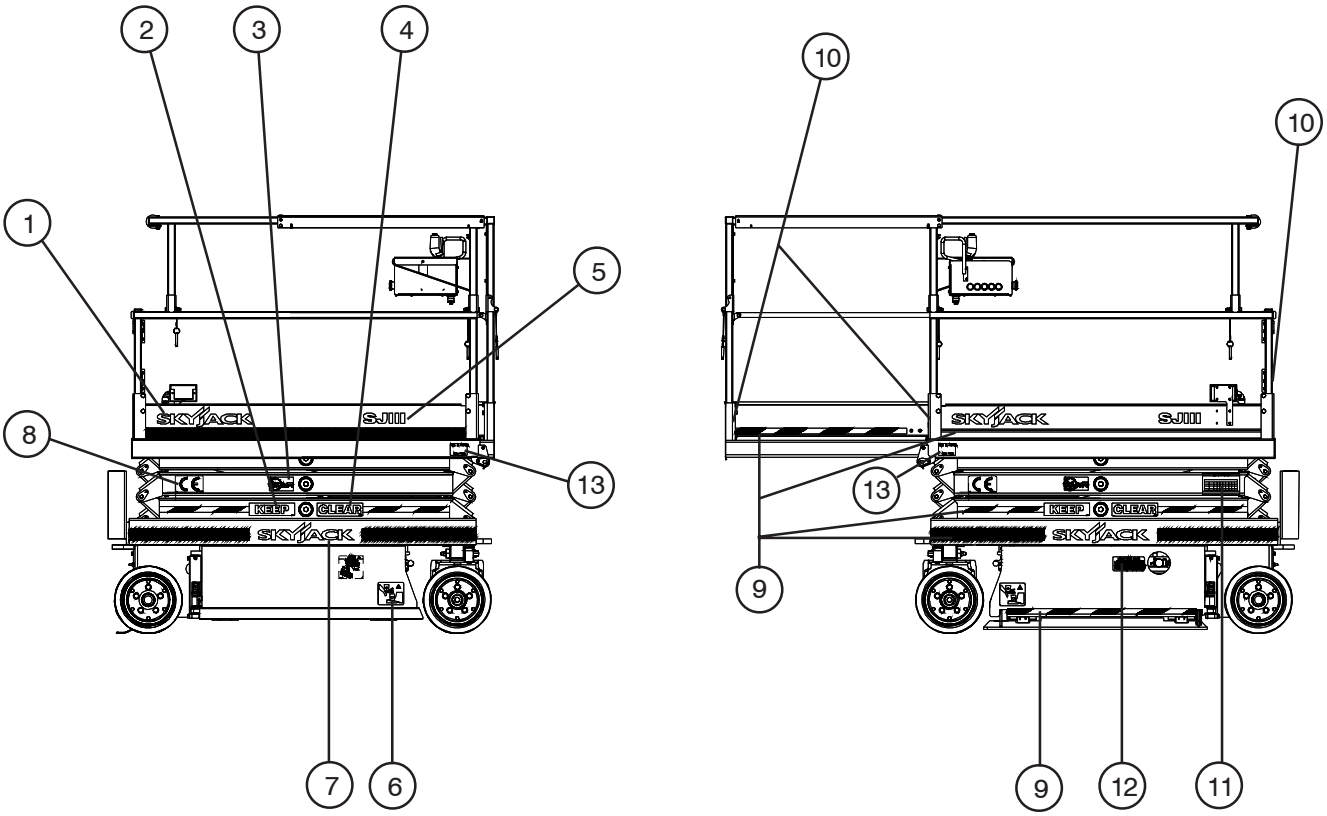

1 LABEL, Logo
2 LABEL, Keep
3 LABEL, Caution Lift
4 LABEL, Clear
5 LABEL, Model Designation
6 LABEL, Danger Pinch Hand/Foot
7 LABEL, Logo
8 LABEL, CE
9 LABEL, Tape Assembly
10 LABEL, Harness Anchorage
11 LABEL, Annual Inspection
12 LABEL, Emergency Lowering
13 LABEL, Made in America

10652AC

Labels and Nameplates - Models 3215 & 3219

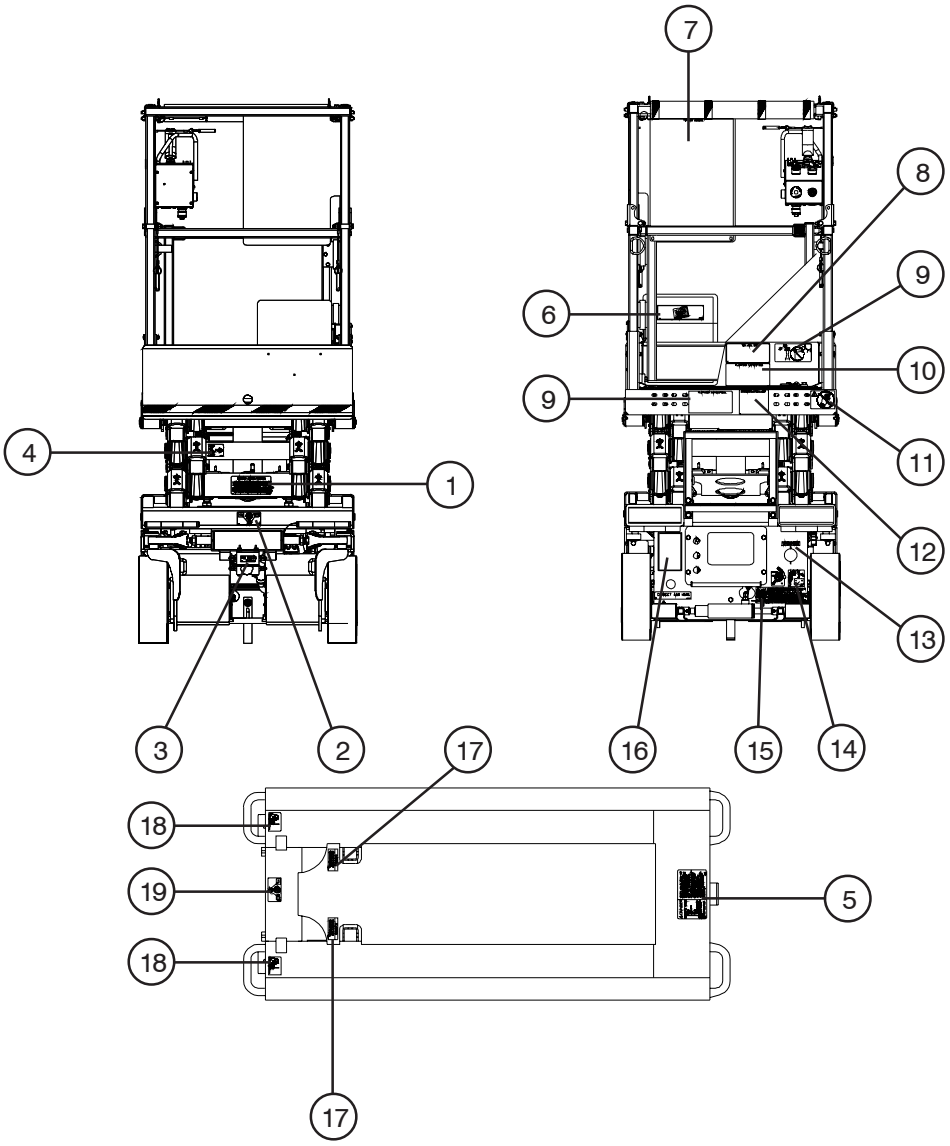

1 LABEL, Emergency Lowering
2 LABEL, Tie down/Lift lugs pictorial
3 LABEL, Free Wheeling Valve
4 LABEL, Safety Bar Place Here
5 LABEL, Proper Use of Safety Bar
6 LABEL, Manual Box
7 LABEL, Danger/Warning/Caution
8 LABEL, ON/OFF Slab
9 LABEL, Side Force/No Wind
10 LABEL, Platform Capacities
11 LABEL, Do Not Wear Jewelry
12 LABEL, Checklist
13 LABEL, Connect AC Supply Here
14 LABEL, Battery Disconnect Switch
15 LABEL, Caution, Brake
16 NAMEPLATE, Serial Number
17 LABEL, Do Not Alter
18 LABEL, Forklift Boot
19 LABEL, Tie Down/Lift Lugs Pictorial

10653AC

Labels and Nameplates - Models 3215 & 3219

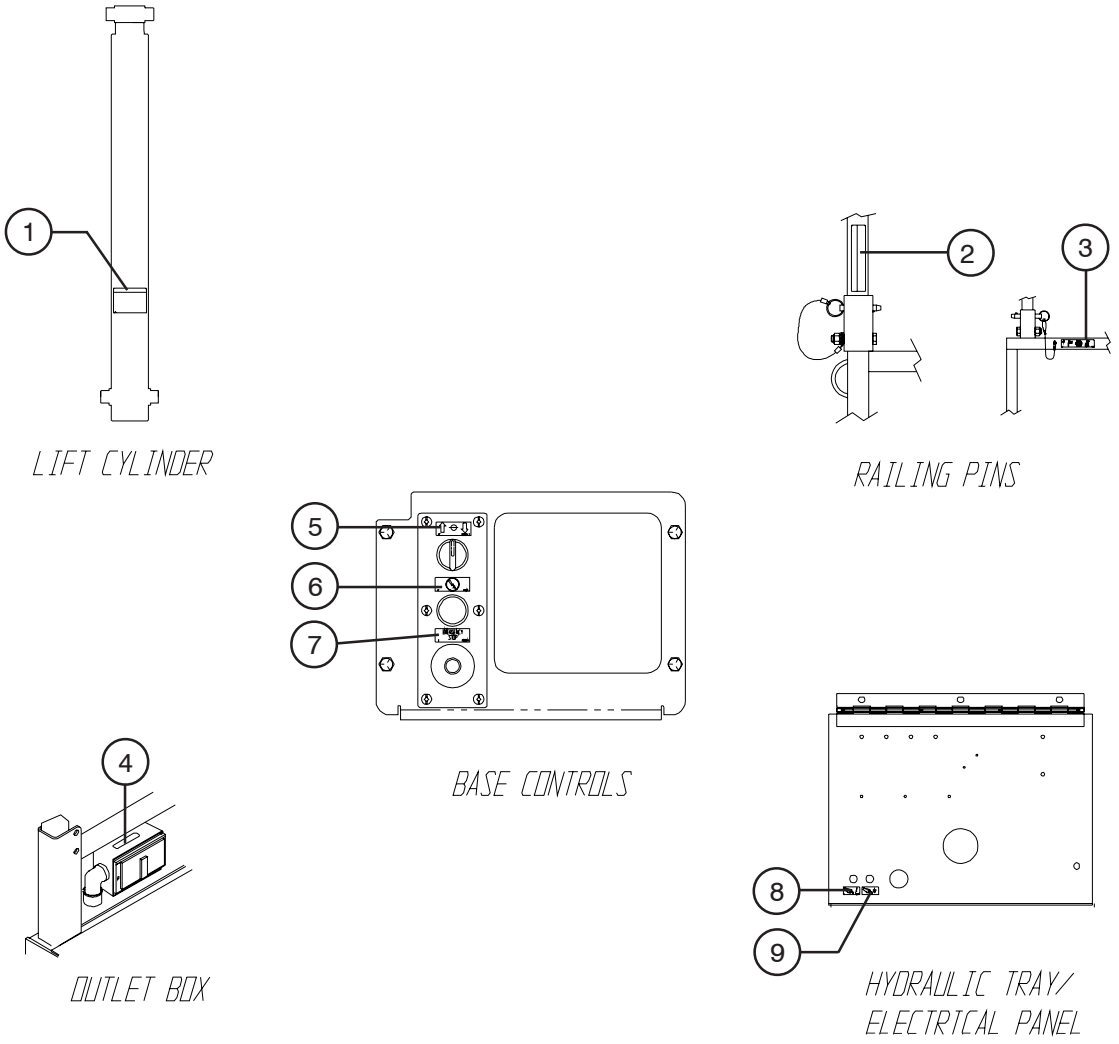

1	LABEL, Orifice
2	LABEL, Warning! Falling Hazard
3	LABEL, Warning! Falling Hazard (w/ hinged Railings)
4	LABEL, Connect AC Supply Here
5	LABEL, UP/OFF/DOWN
6	LABEL, Enable
7	LABEL, Emergency Stop
8	LABEL, Ground Reset
9	LABEL, Power Reset

10654AC

Labels and Nameplates - Models 3215 & 3219

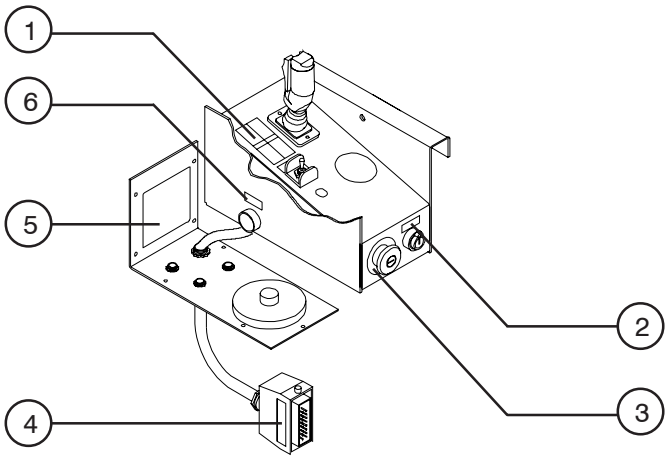

CONTROL BOX

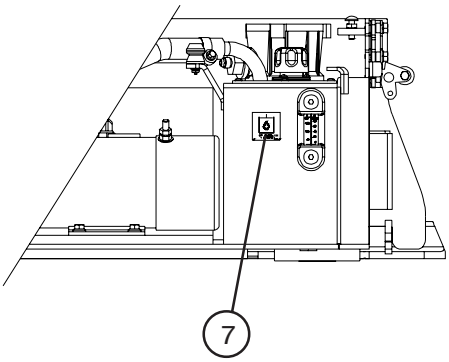

HYDRAULIC TRAY

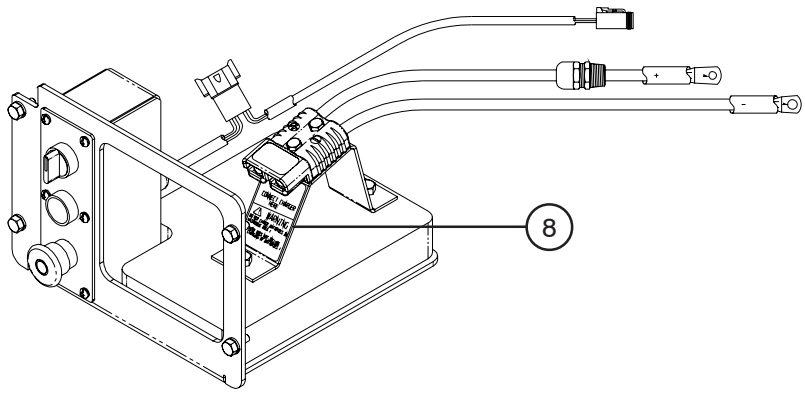

1 LABEL, LIFT/DRIVE Direction
2 LABEL, OFF/ON Power (ANSI/CSA Models)
LABEL, BASE/OFF/PLATFORM (CE Models)
3 LABEL, Emergency Stop
4 LABEL, Hydraulic Proportional
5 LABEL, Joystick Controller
6 LABEL, Horn
7 LABEL, ATF DEXRON III
8 LABEL, Connect Charger Here

10655AA

Labels and Nameplates - Models 3220, 3226, 46xx & 68xx

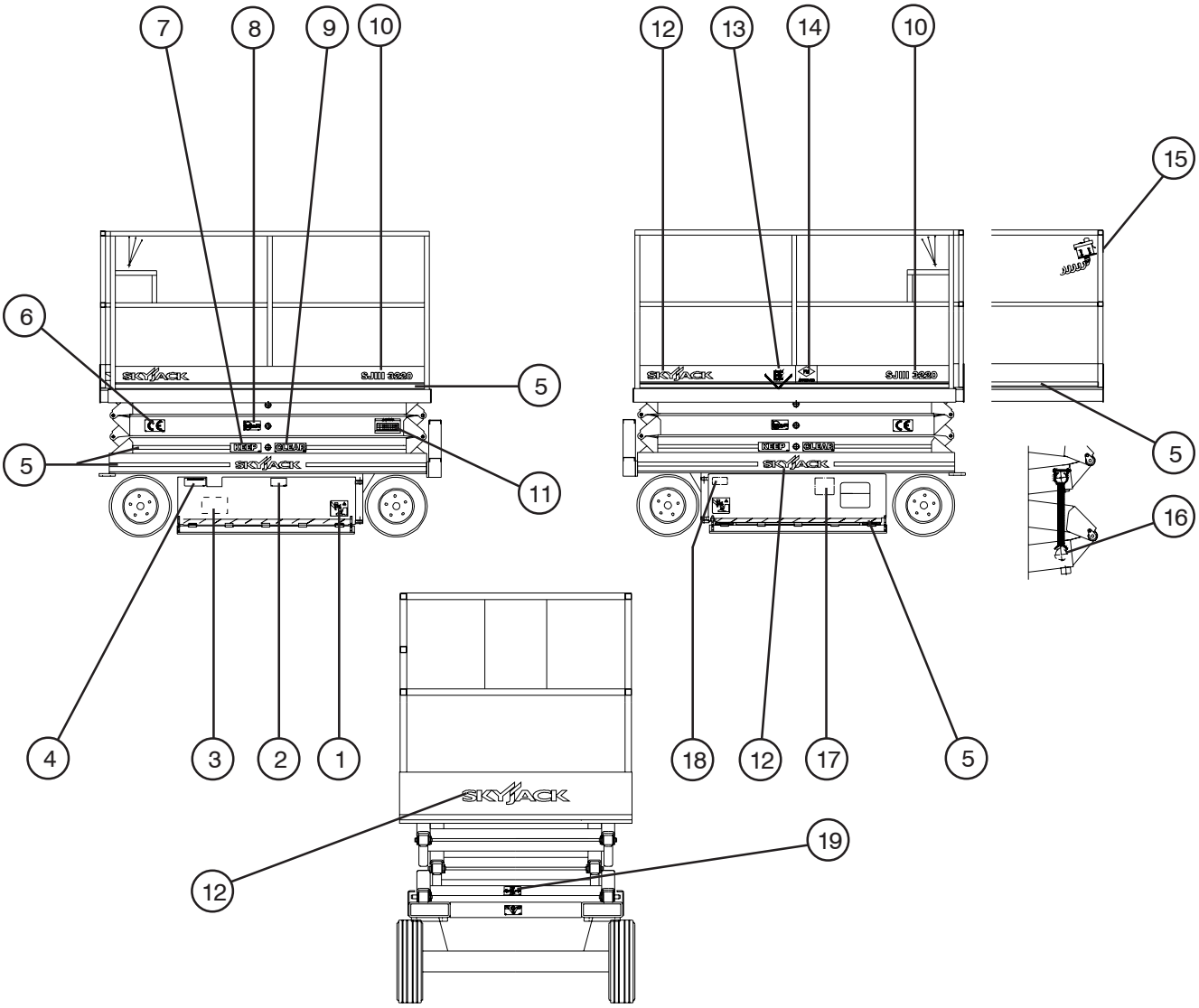

1 LABEL, Danger, Pinch Hand/Foot
2 LABEL, Push to “DOWN”
3 LABEL, Hydraulic System
4 LABEL, Emergency Lowering
5 LABEL, Tape Assembly
6 LABEL, “CE”
7 LABEL, Keep
8 LABEL, Caution Lift
9 LABEL, Clear
10 LABEL, Model Designation
11 LABEL, Annual Inspection
12 LABEL, Logo
13 LABEL, EE symbol*
14 LABEL, FM approved*
15 LABEL, Attention, Powered Deck
16 LABEL, Safety Bar
17 LABEL, Warning Wood Spacers
18 LABEL, Fuse
19 LABEL, Place Safety Bar Here

** EE-Rated Machines*

10661AB

Labels and Nameplates - Models 3220, 3226, 46xx & 68xx

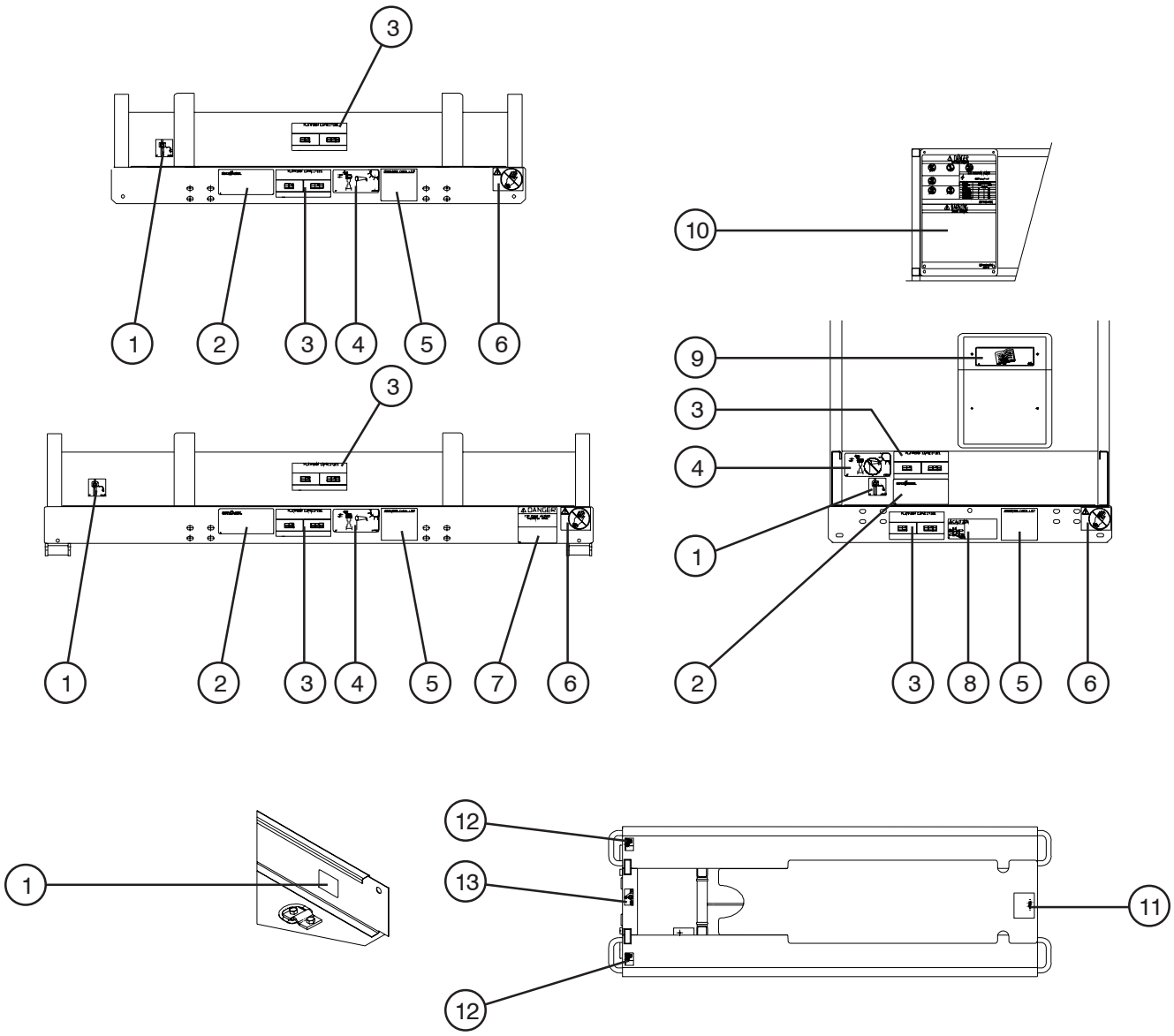

1 LABEL, Harness Anchorage
2 LABEL, ON/OFF Slab
3 LABEL, Platform Capacities
4 LABEL, Side Force/Outdoor
5 LABEL, Checklist
6 LABEL, Do Not Wear Jewelry
7 LABEL, Danger, Foam Filled Tires
8 LABEL, Caution, Brake
9 LABEL, Manual Box
10 LABEL, Danger/Warning/Caution
11 LABEL, Safety Bar
12 LABEL, Forklift Boot
13 LABEL, Tie Down/Lift Lugs pictorial

10662AA

Labels and Nameplates - Models 3220, 3226, 46xx & 68xx

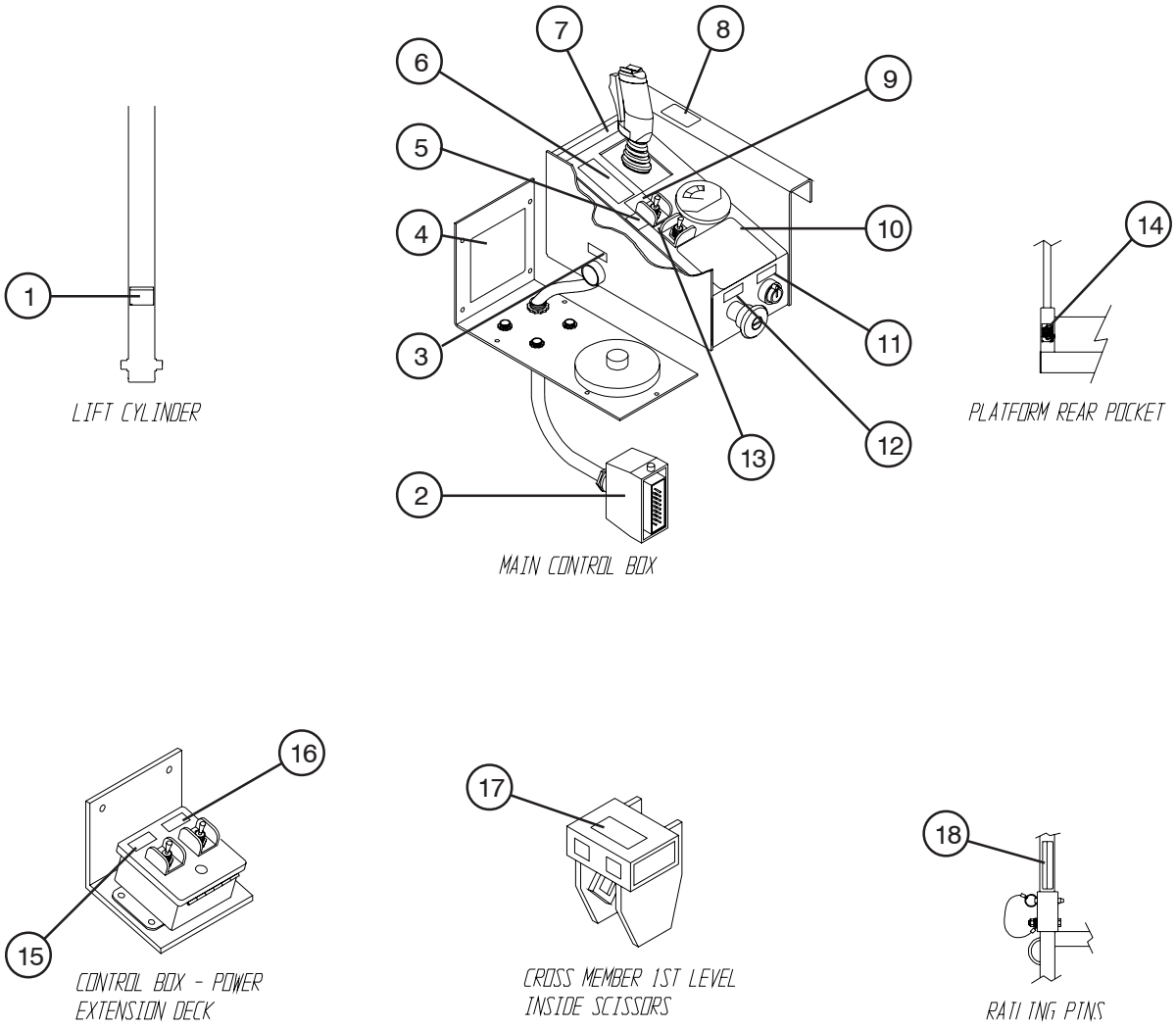

1	LABEL, Orifice	10	LABEL, Operator Warning
2	LABEL, Hydraulic Proportional	11	LABEL, Power ON/OFF
3	LABEL, Horn	12	LABEL, Emergency Stop
4	LABEL, Proportional Controller Connector	13	LABEL, LIFT/OFF/DRIVE Switch
5	LABEL, HIGH/NORMAL Torque	14	LABEL, Rail Height
6	LABEL, Controller, LIFT/DRIVE	15	LABEL, Enable (w/ powered extensions)
7	LABEL, Operation	16	LABEL, Platform EXTEND/RETRACT
8	LABEL, Enable Proportional Controller	17	LABEL, Emergency Lowering
9	LABEL, Torque Switch	18	LABEL, Falling Hazard (w/ hinged rails)

10658AA

Labels and Nameplates - Models 3220, 3226, 46xx & 68xx

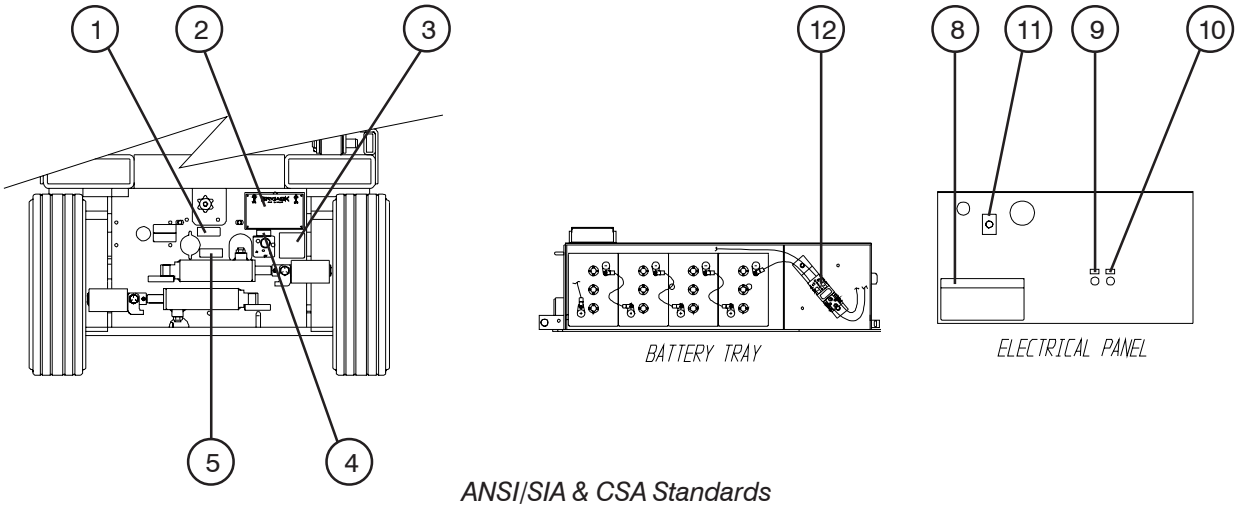

ANSI/SIA & CSA Standards

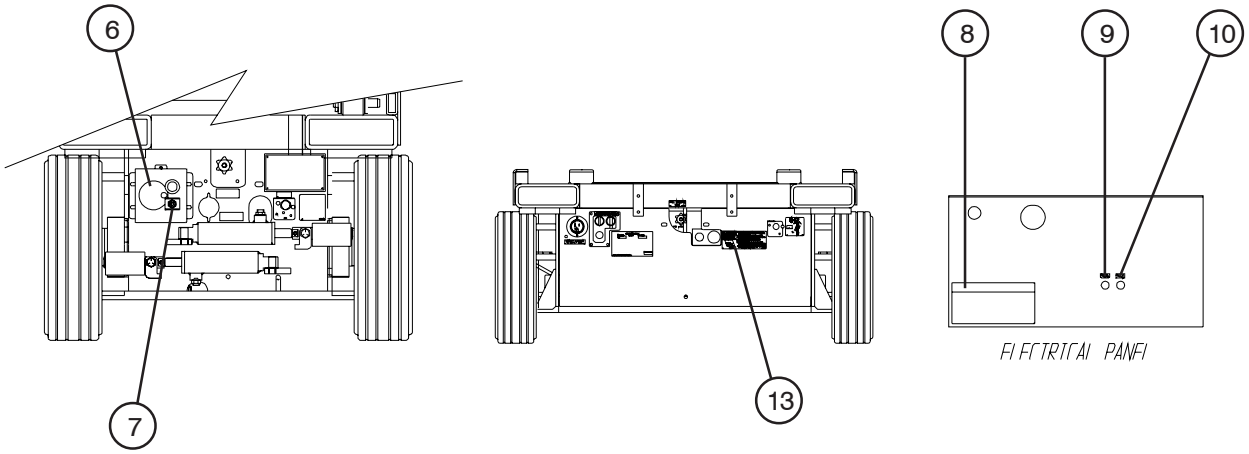

CE Standards

1 LABEL, Free-Wheeling Valve
2 NAMEPLATE, Serial Number
3 LABEL, Main Power Disconnect Switch
4 LABEL, Power ON/OFF
5 LABEL, Connect AC Supply Here
6 LABEL, Emergency Stop
7 LABEL, Platform EXTEND/RETRACT
8 LABEL, Warning Replacement Parts
9 LABEL, Ground Reset
10 LABEL, Power Reset
11 LABEL, UP/DOWN (on electrical panel)
12 LABEL, Connect Charger Here*
13 LABEL, Parking Brakes

** EE-Rated Machines*

10659AA



MOBILE ELEVATING PLATFORMS

www.skyjackinc.com