SKYJACK

OPERATION MANUAL

SJ20

VERTICAL MAST

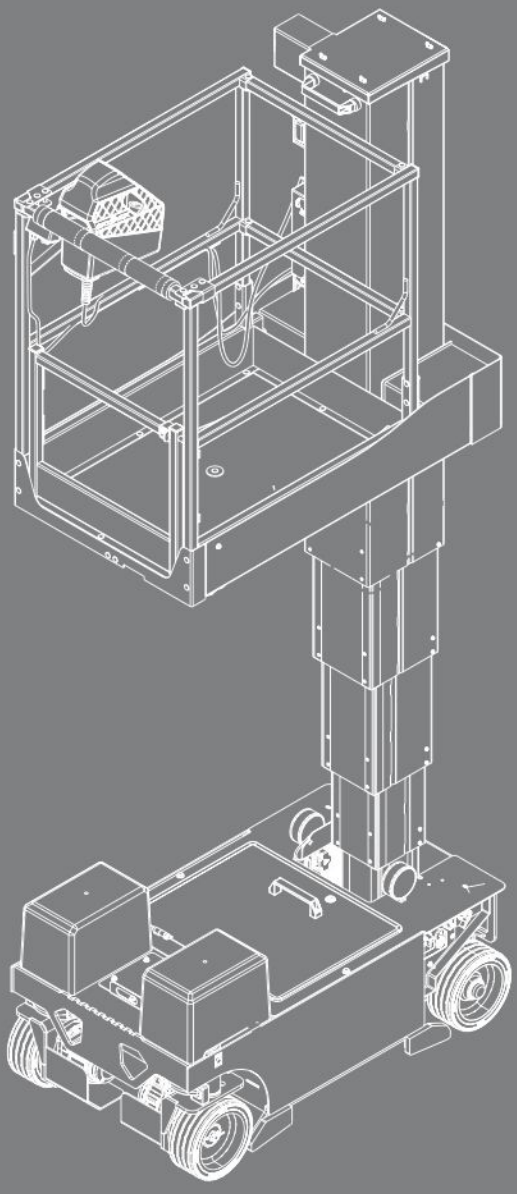

236504ADA
June 2021
ANSI/CSA

This manual is for MEWPs with serial numbers:

SJ20: A601 000 001 & above

Please refer to the website (www.skyjack.com) for contact information, other Serial Numbers, most recent Technical Manuals, and USB software.

Original instructions in English.

THIS SAFETY ALERT SYMBOL MEANS ATTENTION!



BE ALERT! YOUR SAFETY IS INVOLVED.

The Safety Alert Symbol identifies important safety messages on MEWPs, safety signs in manuals or elsewhere. When you see this symbol, be alert to the possibility of personal injury or death. Follow the instructions in the safety message.

⚠ DANGER

DANGER indicates an imminently hazardous situation which, if not avoided, will result in death or serious injury.

⚠ WARNING

WARNING indicates a potentially hazardous situation which, if not avoided, could result in death or serious injury.

⚠ CAUTION

CAUTION indicates a potentially hazardous situation which, if not avoided, may result in minor or moderate injury. It may also be used to alert against unsafe practices.

IMPORTANT

IMPORTANT indicates a procedure essential for safe operation and which, if not followed, may result in a malfunction or damage to the MEWP.

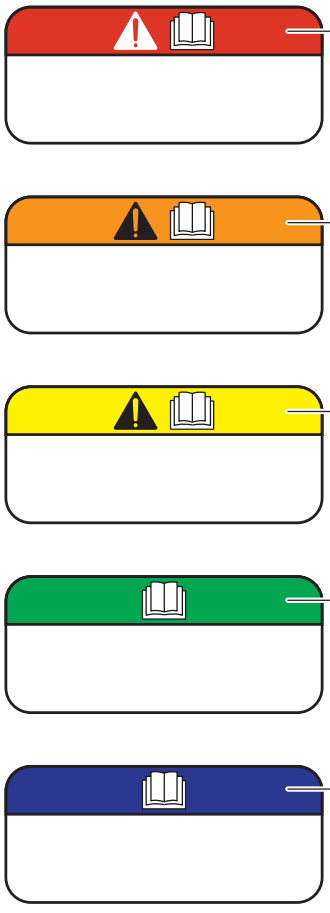

Notes

Table of Contents

Section 1 – About this Mobile Elevating Work Platform (MEWP) 9

1.1 Read and heed 9

1.1-1 Mobile Elevating Work Platform (MEWP) definition 9

1.1-2 Purpose of equipment 9

1.1-3 Use of equipment 9

1.1-4 Operation manual 9

1.1-5 Operator 9

1.1-6 Service policy and warranty 9

1.1-7 Ownership of MEWP 9

1.1-8 Optional equipment 9

1.1-9 Scope of this manual 10

1.2 Primary assemblies 11

1.3 Serial number nameplate 12

1.4 Maintenance responsibility 13

1.4-1 Operator 13

1.4-2 Maintenance and inspection schedule 13

1.4-3 Owner 13

Section 2 – General Safety Precautions 15

2.1 Electrocution hazards 15

2.1-1 Minimum distance from electrical conductors 15

2.2 Safety instructions 16

2.3 Fall-protection 19

2.4 Worksite inspection 19

Section 3 – Familiarization 21

3.1 Overview of the MEWP 22

3.2 Manual storage box 23

3.3 Control functions 23

3.3-1 Main power disconnect switch 23

3.3-2 Base control console 23

3.3-3 Platform control console 24

3.4 Features and devices 24

3.4-1 Lowered travel position and elevated travel position 24

3.4-2 Drive speed 25

3.4-3 Tilt switch 25

3.4-4 Brake release system 25

3.4-5 Emergency-lowering system 25

3.4-6 *Fall-protection anchorages* . . . 25
3.4-7 *Pothole protection device* . . . 26
3.4-8 *Platform load-sensing system* . . . 26
3.5 General components . . . **27**
3.5-1 *Circuit breaker and diagnostic switch* . . . 27
3.5-2 *AC power socket on the platform* . . . 27
3.5-3 *Battery charger* . . . 27
3.5-4 *Motion alarm* . . . 27
3.5-5 *Platform maintenance lock* . . . 28
3.6 Optional equipment . . . **28**
3.6-1 *Secondary Guarding Lift Enable (SGLE) push-button* . . . 28
3.6-2 *Flashing Light* . . . 29
3.6-3 *Elevate™ telematics - access control unit* . . . 29
3.6-4 *Dual Height Control Console* . . . 31
3.6-5 *ECOTray Leak Containment System* . . . 31

Section 4 – Inspections Before Operation . . . **33**
4.1 Operator's Responsibility . . . **33**
4.2 Visual and daily maintenance inspections . . . **34**
4.2-1 *Labels* . . . 34
4.2-2 *Electrical* . . . 34
4.2-3 *Limit Switches* . . . 34
4.2-4 *Hydraulic* . . . 34
4.2-5 *Base* . . . 35
4.2-6 *Wheel/tire assembly* . . . 35
4.2-7 *Platform assembly* . . . 36
4.2-8 *Hydraulic/electrical compartment* . . . 37
4.2-9 *Lift mechanism* . . . 39
4.2-10 *Optional equipment and attachments* . . . 39
4.3 Function tests . . . **40**
4.3-1 *Do a test of the main power disconnect switch* . . . 40
4.3-2 *Do a test of the emergency-stop button on the base* . . . 40
4.3-3 *Do a test of the* **off**/**platform**/**base key** *switch* . . . 40
4.3-4 *Do a test of the lower/neutral/raise switch* . . . 41
4.3-5 *Do a test of the brake release function* . . . 41
4.3-6 *Do a test of the emergency-lowering function* . . . 42
4.3-7 *Do a test of the platform maintenance limit switch* . . . 42
4.3-8 *Do a test of the emergency-stop button on the platform* . . . 43
4.3-9 *Do a test of the function-enable switch* . . . 43
4.3-10 *Do a test of the steer function* . . . 43
4.3-11 *Do a test of the drive function* . . . 43
4.3-12 *Do a test of the anti-tiedown function* . . . 44
4.3-13 *Do a test of the brakes* . . . 44

4.3-14 Do a test of the platform raise and lower functions . . . 45
4.3-15 Do a test of the horn . . . 45
4.3-16 Do a test of the elevated travel speed . . . 45
4.3-17 Do a test of the SGLE switch (optional equipment) . . . 46
4.3-18 Do a test of the flashing light (optional equipment) . . . 46
4.3-19 Do a test of the dual height control console (optional equipment) . . . 47
4.4 Operator's checklist . . . 48

Section 5 – Operation . . . 51
5.1 Energize the base control console . . . 51
5.2 Raise or lower the platform with the base control console . . . 51
5.3 Energize the platform control console . . . 51
5.4 Raise or lower the platform with the platform control console . . . 52
5.5 Drive forward or rearward . . . 53
5.6 Steer . . . 53
5.7 Platform Traversing . . . 53
5.8 Raise and lower with the SGLE platform control console (optional equipment) . . . 54
5.9 MEWP shutdown . . . 54

Section 6 – Additional Procedures . . . 55
6.1 Use the emergency-lowering function . . . 55
6.2 Release the brakes . . . 55
6.3 Use the platform control console from the ground . . . 56
6.3-1 Remove the platform control console . . . 56
6.3-2 Operate the MEWP from the ground . . . 56
6.4 Push, Winch and Tow the MEWP . . . 58
6.5 Move the MEWP for transport . . . 58
6.5-1 Hoist the MEWP . . . 59
6.5-2 Drive and tie-down the MEWP . . . 59
6.6 Open the hydraulic/electrical compartment . . . 61
6.7 Charge the Battery . . . 62

Section 7 – Specifications . . . 65
7.1 Standard and optional equipment . . . 65
7.2 Owner's annual inspection record . . . 66
7.3 Specifications . . . 67

7.4 Environment 68
7.5 Maximum platform capacities (evenly distributed) 68
7.6 Floor loading capacity 69

Section 8 – Labels 71
8.1 Labels 72
8.1-1 Rear view 72
8.1-2 Left view 74
8.1-3 Front view 78
8.1-4 Right view 81
8.1-5 Platform control console 83
8.1-6 Base view (cover down) 84
8.1-7 Platform (inside view) 85
8.1-8 Base view–cover up 86
8.1-9 Optional equipment 87

Section 9 – Unique Skyjack Features 89

Section 1 – About this Mobile Elevating Work Platform (MEWP)

1.1 Read and heed

Skyjack is continuously improving and expanding product features on its equipment; therefore, specifications and dimensions are subject to change without notice.

1.1-1 Mobile Elevating Work Platform (MEWP) definition

A mobile machine intended for moving persons, tools, and material to working positions, consisting of a work platform with controls, an extending structure and a chassis.

1.1-2 Purpose of equipment

The Skyjack Vertical Mast lifts are designed to move personnel, tools, and materials to working positions.

1.1-3 Use of equipment

The MEWP is a highly maneuverable, mobile work station. Work platform elevation and elevated driving must only be done on a firm, level surface.

1.1-4 Operation manual

The operation manual is an important part of the MEWP. It is important to always keep a copy of this manual in the weather-resistant manual storage box of the MEWP. The manual must be in good condition.

1.1-5 Operator

The operator must read and completely understand this operation manual, the safety panel label located on the platform, the limitations, operating procedures, operator's responsibility for maintenance and all other warnings and instructions in this manual and on the MEWP.

Before you operate the MEWP, make sure you read and completely understand this information:

1. The full contents of the operation manual, including the MEWP limitations and the responsibilities of the operator for the operation, applicable maintenance and safety instructions.
2. The safety panel label on the platform, the labels on the MEWP and the attachments.

Compare the labels on the MEWP with the labels in this manual. Immediately replace any labels that are damaged or missing.

Only trained and authorized personnel shall be permitted to operate a MEWP.

The operator must be familiar with the employer's work rules and related government regulations.

1.1-6 Service policy and warranty

Skyjack warrants each new product to be free of defective parts and workmanship for the first 2 years or 3000 hours, whichever occurs first. Any defective part will be replaced or repaired by your local Skyjack dealer at no charge for parts or labor. In addition, all products have a 5 year structural warranty. Contact the Skyjack Service Department for warranty statement extensions or exclusions.

1.1-7 Ownership of MEWP

Notify Skyjack of MEWP ownership. If you sell or transfer the ownership of a MEWP, promptly notify Skyjack of the new owner's contact information.

Skyjack needs this information to inform the owner of any updates or additional activities that are necessary to keep the machine in proper working condition.

1.1-8 Optional equipment

This MEWP is designed to accept a variety of optional accessories. Refer to *Section 7.1* for a list of the optional accessories. Operating instructions for these options are located in *Section 5* of this manual.

For components or systems that are not standard, speak to the Skyjack Service Department. Give the model and serial number for each applicable MEWP.

1.1-9 Scope of this manual

1. This manual applies to the ANSI/CSA versions of the SJ Vertical Mast series. For a list of applicable models, refer to *Section 7.1*.
   - Equipment identified with ANSI meets the ANSI/SAIA-A92.20-2018 standard.
   - Equipment identified with CSA meets the CSA B354.6:2017 standard.

1.2 Primary assemblies

The MEWP has these primary assemblies:

1. Base
2. Lift mechanism
3. Platform.

1 **Base:** The base is a rigid, one-piece weldment consisting of these components:

- Hydraulic system and components.
- Electrical system and components.
- Two 12 volt batteries.
- Emergency-lowering system at the base of the mast.
- The front wheels are powered by electric motors, are steered by a hydraulic cylinder, and have spring-applied, electronically-released brakes
- The rear wheels are non-driven.

2 **Lift mechanism:** The mast assembly is raised and lowered by a multi-stage hydraulic-lift cylinder with holding valves.

3 **Platform:** The platform has these parts.

- Tubular support frame.
- Slip-resistant deck surface.
- Fixed tubular guardrails, with mid-rails, and toe boards.
- You can enter and exit the platform from the front of the MEWP through a spring-returned gate with a latch.
- AC power outlet.

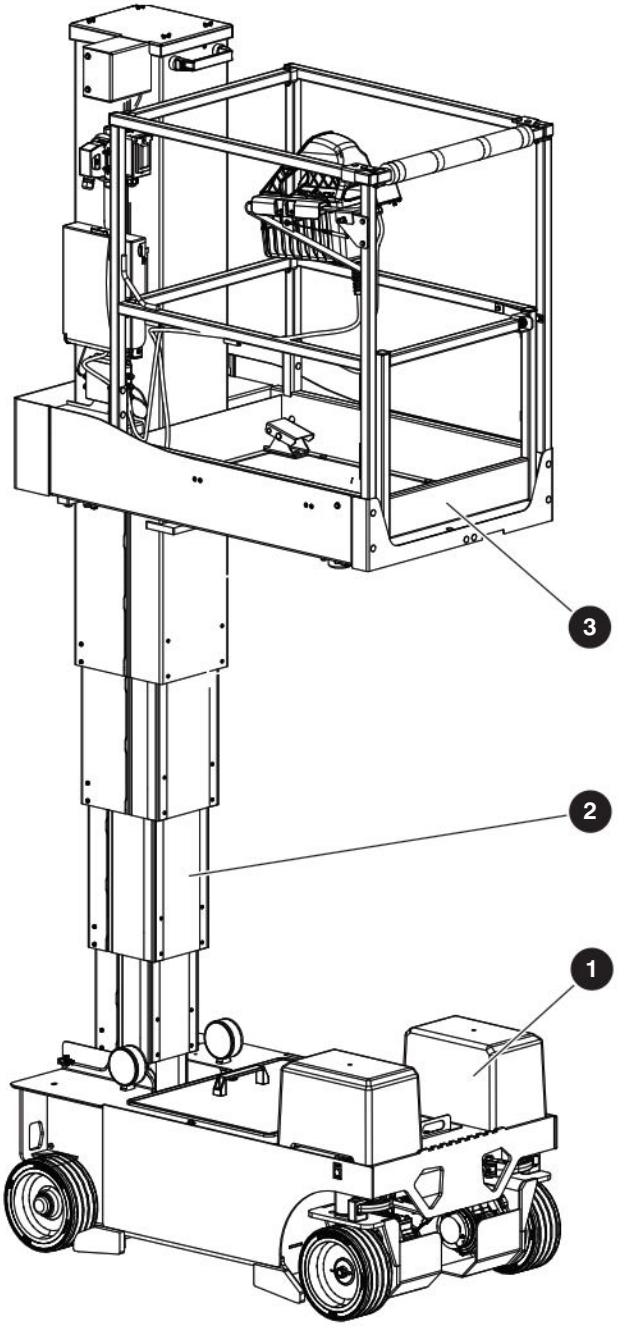

Figure 01 *Primary assemblies*

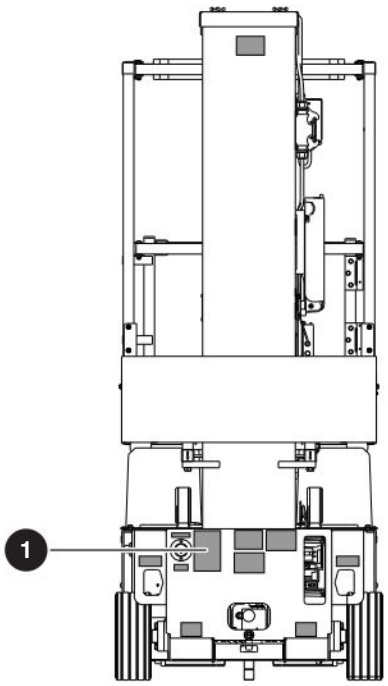

1.3 Serial number nameplate

The **serial number nameplate** 1 is located at the rear of the MEWP. It contains this information:

- Model number
- Type
- Group
- Serial number
- Indoor or outdoor use
- Capacity and maximum number of persons
- Voltage
- Maximum drive height
- Maximum platform height
- Maximum wind speed
- Maximum manual force
- Model year
- MEWP weight
- System pressure
- Maximum incline.

1.4 Maintenance responsibility

1.4-1 Operator

Before the beginning of each shift, do all the daily inspections and function tests. Refer to *Section 4*.

1.4-2 Maintenance and inspection schedule

Refer to the service manual for frequent, periodic, and annual inspections.

The actual operating environment of the MEWP may affect the maintenance schedule.

IMPORTANT

Only use original or manufacturer-approved parts and components for the MEWP.

NOTE

Refer to the Skyjack web site (www.skyjack.com) for machine registration and the latest service bulletins before you do frequent/periodic or annual inspections.

1.4-3 Owner

The owner is responsible for maintenance inspections and repairs. Refer to the service manual for the recommended maintenance and inspection areas and intervals. Keep a record of the annual inspection on the label on the mast assembly. Refer to *Section 7.2* in this manual.

⚠ WARNING

Only trained and qualified/competent personnel, who understand the mechanical procedures, may do maintenance on the MEWP. The use of a MEWP that is not properly maintained or in the correct working condition could result in death or serious injury.

Notes

Section 2 – General Safety Precautions

⚠ WARNING

Failure to obey the instructions and precautions in this manual could result in MEWP damage, property damage, personal injury or death.

It is mandatory that you use this MEWP correctly. Read this manual and make sure you fully understand it before you operate the MEWP.

Use personal protective equipment (PPE) when you do work on or near machinery to protect your eyes, ears, hands, feet, and body.

Any modifications to the MEWP must have written permission from Skyjack.

⚠ WARNING

Do not operate the MEWP if:

- **It does not operate correctly**
- **It is damaged, or shows worn or missing parts**
- **The safety devices are tampered with or disabled**
- **It is locked and tagged for servicing or repair**
- **It was modified without permission from Skyjack and the MEWP owner.**

If you do not obey, there is a risk of death or serious injury.

2.1 Electrocution hazards

The MEWP is not electrically insulated and does not provide protection from contact with or proximity to energized electrical conductors. Follow *Section 2.1-1* for the minimum distance to keep between all parts of the MEWP, occupants, or tools, and the electrical conductors. Consider MEWP movement and electrical line sway in minimum distance calculation.

If you need to work nearer than 3 m (10 ft), stop and apply control measures as determined by a qualified person with respect to electrical transmission and distribution.

Obey all the national, state/provincial/territorial and local safety rules.

2.1-1 Minimum distance from electrical conductors

Voltage Range	Minimum Distance from Electrical Conductors
≤ 50 KVA	3 m (10 ft)
> 50 KVA, or if not known	STOP and apply control measures as determined by a qualified person with respect to electrical transmission and distribution.

⚠ DANGER

Electrocution hazard. Keep all parts of the MEWP, occupants, or tools a safe distance away from power lines, electrical power sources, or energized sources. If you do not obey, there is a risk of death or serious injury.



Keep a minimum safe distance from sources of high-voltage power.



DO NOT operate the MEWP during lightning or storms.

⚠ CAUTION

DO NOT use the MEWP as a ground for welding. If you do not obey, there is a risk of minor or moderate injury, or malfunction or damage to the MEWP.

2.2 Safety instructions

⚠ WARNING

DO NOT operate this MEWP without proper authorization and training. Failure to avoid this hazard could result in death or serious injury.

⚠ WARNING

DO NOT operate this MEWP in enclosed areas without adequate ventilation for exhaust gas and fumes. Failure to follow this warning could cause death or serious injury.

⚠ WARNING

Failure to heed the following safety precautions could result in tip-over, falling, crushing, or other hazards leading to death or serious injury.

KNOW all national, state/provincial or territorial, and local rules which apply to your MEWP and worksite.

MAKE SURE all the safety and instructional labels are correctly attached on the MEWP in the correct location. Clean or replace labels that you cannot read.

DISCONNECT and lock out main power disconnect on the left side of the MEWP when leaving the MEWP unattended to prevent unauthorized use.



DO NOT wear jewelry or loose clothing that could become caught or entangled.



DO NOT allow the entanglement of ropes, cables or hoses with the MEWP, adjacent structures or objects.



Prevent falling from the platform. Always keep a firm footing on the platform floor when working thereon. Do not climb on the toe-board, mid-rail, or top-rail. Do not use planks, ladders, or any other devices on the platform for achieving additional height or reach.



DO NOT raise the platform or operate elevated in windy or gusty conditions that exceed the limits specified in *Section 7.5*.



DO NOT increase the surface area of the platform or carry large surface area items when exposed to wind. Increasing the area exposed to the wind will decrease the MEWP stability.



DO NOT elevate or drive elevated on a slope. Elevated driving must be done on a firm, level surface.



DO NOT drive elevated on a soft or uneven surface.

DO NOT raise the platform if it is not on a firm, level surface.

MAKE SURE the ground condition assessment considers subsurface voids such as cellars, basements, culverts, and pipes.



DO NOT drive elevated near depressions or holes of any type, loading docks, debris, drop-offs or surfaces that may affect the stability of the MEWP.

IF OPERATION IN AREAS WITH HOLES OR DROP-OFFS IS ABSOLUTELY NECESSARY, elevated driving shall not be allowed. Position the MEWP horizontally only with the platform fully-lowered. After ensuring that all 4 wheels have contact with a firm, level surface, the platform can be raised. After elevation, the drive function must not be activated.

DO NOT ascend or descend grades greater than the maximum inclines listed in *Section 7.3* . Ascending or descending slopes must only be done when fully lowered.



DO NOT operate a MEWP that has ladders, scaffolding, or other devices on it to increase the platform size or work height.



DO NOT exceed the maximum side force on the platform capacity label when elevated (refer to *Section 7.5*).



DO NOT use the MEWP as a crane.



DO NOT sit, stand, or climb on the guardrails.



DO NOT climb on the base or the mast.



DO NOT collide or crush. Be aware of obstructions, personnel, or other possible hazards around the MEWP when elevating, lowering, or driving. Keep all body parts inside the platform when elevating or driving. Be aware of blind spots when operating the MEWP.



DO NOT elevate the platform when the MEWP is on a truck, forklift, or other device or vehicle.



DO NOT use the MEWP when the wheels or tires are damaged (refer to ***section*** *Section 4.2-6*).

Make sure the wheel nuts and cotter pins are in place.



DO NOT alter or disable limit switches or other safety devices.



DO NOT use the MEWP without guardrails, lock pins, and the entry gate in place.



DO NOT use the MEWP under the influence of alcohol or drugs, or if the operator's performance is impaired by a medical condition, the influence of prescription or over the counter drugs, or fatigue.



DO NOT exceed the rated capacity of the MEWP.



DO NOT distribute the load unevenly.



DO NOT use the MEWP if it does not function correctly or if any parts are damaged or worn.



DO NOT leave the MEWP unattended with the key in the key switch.



DO NOT access the hydraulic/ electrical compartment while the platform is raised.

DO NOT operate on slippery surfaces without sufficient traction to stop, drive, or steer the MEWP.

STUNT driving and horseplay are prohibited.

DO NOT position the MEWP against another object to steady the platform.

DO NOT place materials on the guardrails or materials that exceed the confines of the guardrails unless approved by Skyjack.

Remove all personnel from the platform before you try to free a snagged platform with the base controls.

2.3 Fall-protection

The guardrail system is the primary fall-protection system of the MEWP platform.

If personal fall-protection equipment (PFPE) is required, by an employer or the authority having jurisdiction, Skyjack recommends the use of a full body harness with a lanyard. PFPE must be attached only to approved fall-protection anchorage points in the platform.

All PFPE must be compliant with applicable government rules and must be inspected as per the manufacturer's recommendation.

⚠ WARNING

Fall hazard.

- **Only enter and exit the MEWP using the three points of contact principle.**
- **Only use the equipped access openings.**
- **Only enter and exit the MEWP when the platform is fully lowered.**
- **Face the MEWP when entering or exiting the platform.**

Failure to follow these instructions could result in death or serious injury.

Enter or exit the platform from the ground only. Use the three points of contact principle, which is when two hands and one foot, or one hand and two feet are in contact with the MEWP or the ground at all times. Face the MEWP when entering or exiting the platform.

2.4 Worksite inspection

Make sure the operating environment, ambient temperature, Electromagnetic Compatibility (EMC), and Hazardous Location Rating (locations with potentially flammable gases, explosive gases or particles) are appropriate for the MEWP specifications (refer to *Section 7.4*).

Be sure to follow all national, state/provincial/territorial, and local rules that relate to operating the MEWP.

Perform a full worksite inspection before operating the MEWP. Identify potential hazards in the area.

Be aware of moving equipment in the area. Take the necessary precautions to prevent collisions.

It is the responsibility of the operator to perform a worksite inspection and avoid/address the following hazards:

- Holes or drop-offs
- Slopes
- Ditches or soft fills
- Floor obstructions, bumps, or debris
- Overhead obstructions
- Electrical conductors
- Hazardous locations
- Inadequate surface support to withstand all load forces imposed by the MEWP (refer to *Section 7.6*)
- Wind and weather conditions
- Presence of personnel
- Other mobile equipment
- Traffic hazards
- Equipment that could move and collide with the MEWP, such as overhead cranes
- Other possible unsafe conditions.

Notes

Section 3 – Familiarization

⚠ WARNING

Do not operate this MEWP without correct training and authorization. If you do not obey, there is a risk of death or serious injury.

⚠ WARNING

MEWP Familiarization must be given to a qualified operator. If you do not obey, there is a risk of death or serious injury.

⚠ WARNING

It is the responsibility of the operator to fully understand, and follow all instructions and warnings contained in this operation manual and on the MEWP. If you do not obey, there is a risk of death or serious injury.

Read and fully understand the operation manual, all the warnings, and the instruction labels (refer to *Section 8)* on the MEWP.

Do these tasks before the operation:

1. Worksite inspection. Refer to *Section 2.4*.
2. Daily visual and maintenance inspections. Refer to *Section 4.2*.
3. Function tests. Refer to *Section 4.3*.

3.1 Overview of the MEWP

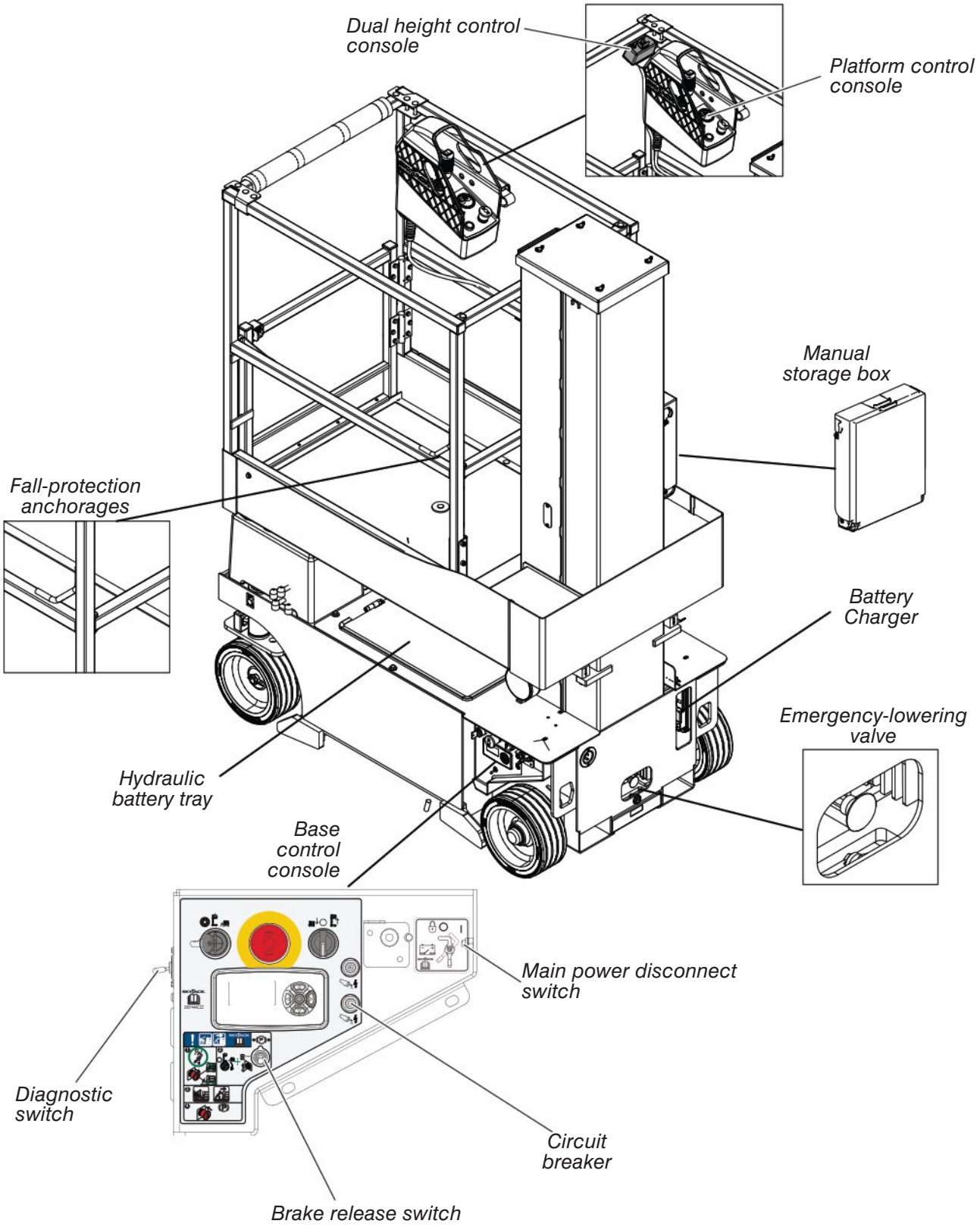

3.2 Manual storage box

The manual storage box is weather-resistant. It contains the operation manual, ANSI Manual of Responsibilities, and the ANSI/CSA certificate. You must keep the operation manual for the make and model of this MEWP in this box. Refer to *Section 3.1* for the location of the manual storage box.

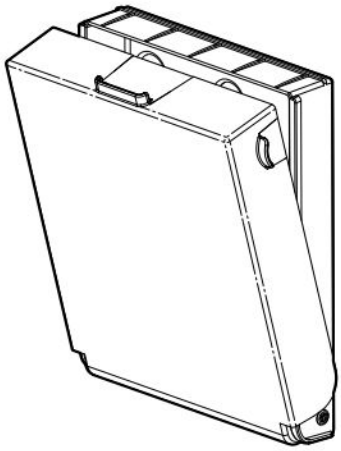

3.3 Control functions

3.3-1 Main power disconnect switch

Refer to *Section 3.1* for the location of the main power disconnect switch.

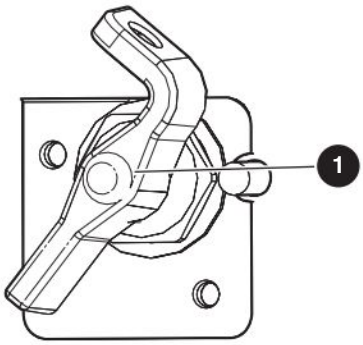

1. **Main power disconnect:** This switch disconnects power to all control circuits when it is in the off position. The switch must be in the on position to operate the MEWP. The switch must be in the off position when you transport the MEWP or put it in storage.

3.3-2 Base control console

Refer to *Section 3.1* for the location of the base control console.

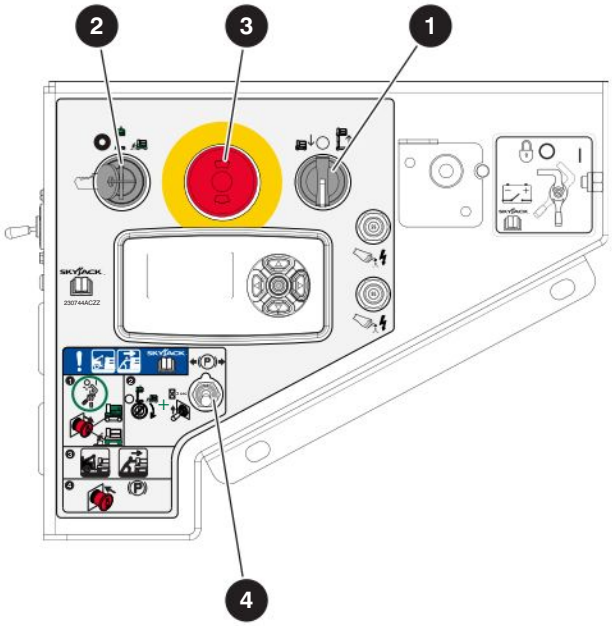

1. **Lower/neutral/raise:** This switch controls the function to lower or raise the platform.
2. **Off/platform/base key:** With this three-way switch, you can:
   - Turn off the power to the MEWP controls.
   - Energize the base controls.
   - Energize the platform controls.
3. **Emergency-stop:** This button disconnects power to the control circuit. Pull to connect the power again.
4. **Brake release:** This switch controls the function to release the brakes to tow the MEWP.

3.3-3 Platform control console

Use this control console to operate the MEWP from the platform. Refer to *Section 3.1* for the location of the platform control console.

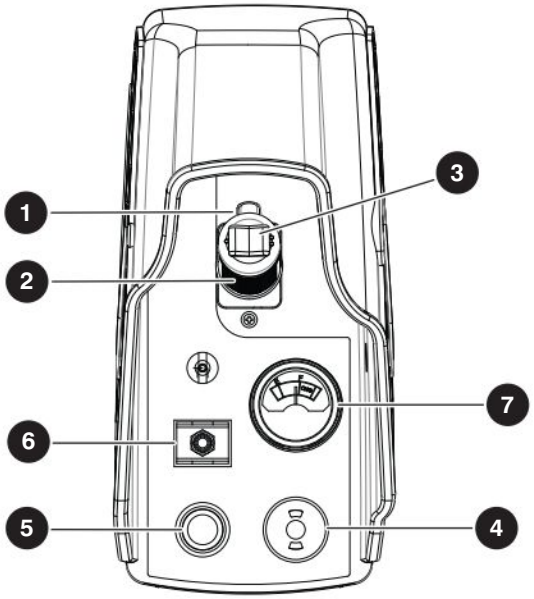

1. **Lift/drive/steer function-enable:** This switch energizes the controller handle. Squeeze and hold the switch continuously to engage the lift, drive and steer functions.
2. **Lift/drive controller:** This one-hand lever controls the lift and drive movements. To return it to the initial neutral position, release the controller.
3. **Steering rocker:** This switch controls the left and right steering. Release the switch to return it to the neutral position.
4. **Emergency-stop/operation light:** This button, disconnects the power to the control circuit.
   - When the light is on continuously, the platform controls are available.
   - When the light flashes, there is an overload (refer to *Section 3.4-8*).
5. **Horn:** This push-button makes a sound like a car horn.
6. **Lift/off/drive:** This switch has three positions or modes.
   - The off position on this switch disconnects the power to both the lift and drive circuits.
   - The lift position energizes the lift circuit.
   - The drive position energizes the drive circuit
7. **Battery voltmeter:** Shows the voltage of the battery.

3.4 Features and devices

3.4-1 Lowered travel position and elevated travel position

The available MEWP functions depend on these factors:

- MEWP configuration (lowered travel position/ elevated travel position)
- Chassis angle
- Platform load

The MEWP is in the lowered travel position when the platform is below height “A” (refer to *Figure 02*).

The MEWP is in the elevated travel position when the platform is at or above height “A” (refer to *Figure 02*).

Model	A - Height	Maximum Drive Height
SJ20	1 m (3 ft 3 in)	Full Height

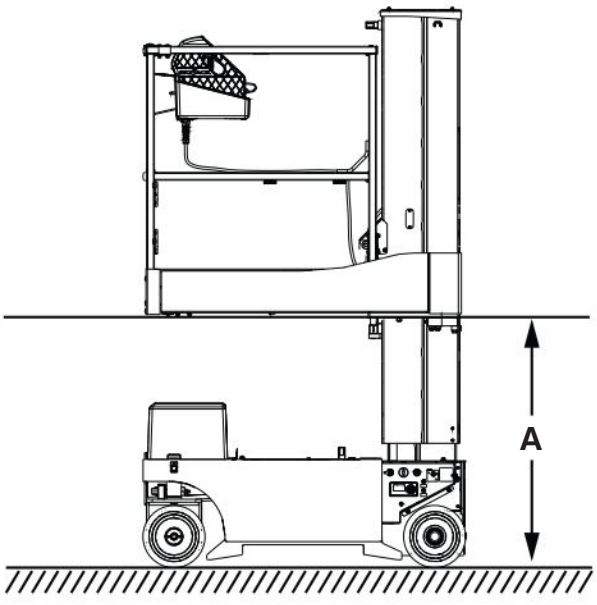

Figure 02 *Lowered and elevated travel position*

3.4-2 Drive speed

The drive speed depends on the MEWP configuration (lowered travel position/elevated travel position). When the MEWP is in the elevated travel position, the speed is slower than the speed in the lowered travel position. Refer to *Section 7.3*.

3.4-3 Tilt switch

This device senses when the MEWP has passed a predetermined angle in the longitudinal (front-to-back) or lateral (side-to-side) direction. Refer to Section 7.5. When the tilt switch is on, and the MEWP is in the elevated travel position, it disables the drive and lift functions. An alarm makes a sound, and an amber light flashes on the bracket on the lower scissor arm. If the alarm makes a sound, fully lower the platform. Level the MEWP before you raise the platform.

3.4-4 Brake release system

This system releases the brakes before you push, winch, or tow the MEWP. Refer to *Section 6.2* for the procedure. Refer to *Section 3.1* for the location of the brake release system.

3.4-5 Emergency-lowering system

With the emergency-lowering system, you can lower the platform if there is a failure of the primary power. Refer to *Section 6.1* for the emergency-lowering procedure. Refer to *Section 3.1* for the location of the emergency-lowering valve ❶.

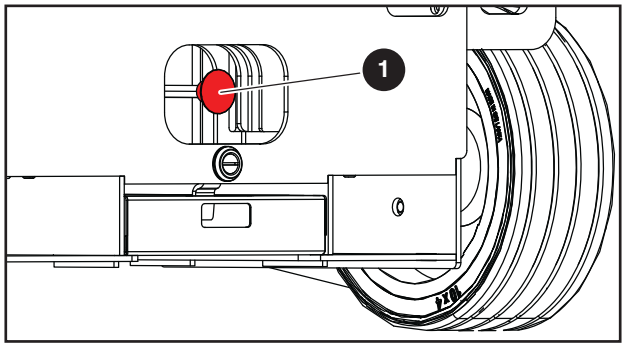

3.4-6 Fall-protection anchorages

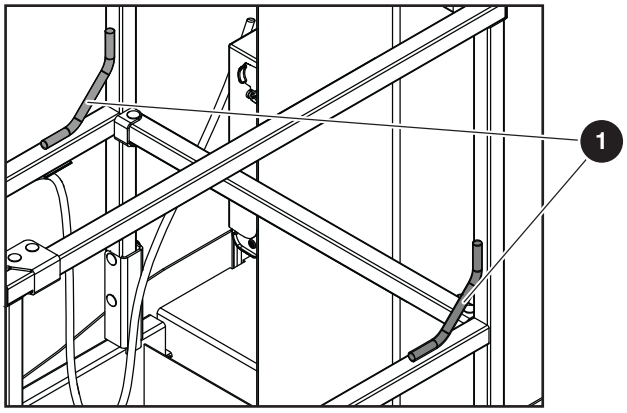

❶ **Fall-protection anchorage:** When required, use this as a point to attach personal fall protection equipment (PFPE). Do not attach the PFPE to any other points on the platform. Do not use this anchorage to lift, anchor, attach, or hold the platform, or other apparatuses or material.

⚠ WARNING

Only use the fall protection anchorage in the limits of the platform. Do not use the fall protection anchorage for other than its intended function (refer to *Section 2.3*). If you use it incorrectly, death, serious injury, and/or MEWP damage can occur.

3.4-7 Pothole protection device

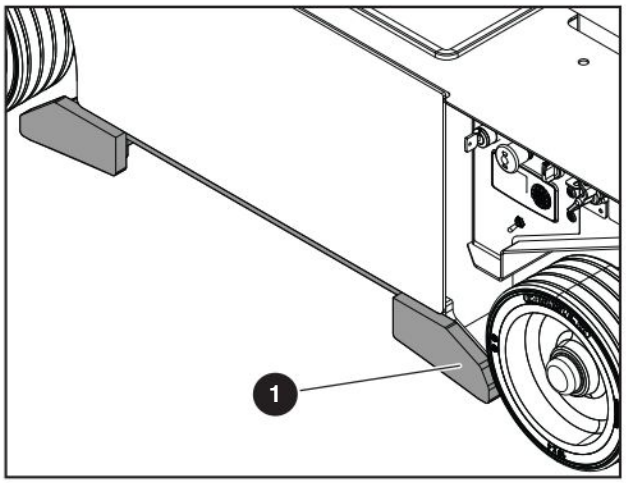

1 **Pothole protection**: These steel weldments reduce ground clearance and assist in the stability of an elevated MEWP in the event of the MEWP encountering a “drop-off” or “pothole.”

⚠ WARNING

Crush hazard. Personnel on the ground must stay away from the pothole protection device. If you do not obey, there is a risk of death or serious injury.

3.4-8 Platform load-sensing system

The platform load-sensing system prevents normal MEWP movement when the platform is overloaded and in a stationary position. Refer to *Section 7.5* for platform capacities.

Load status	Result
The platform is near the rated load.	The light on the emergency-stop button flashes on the platform and base control consoles. All functions are available.
The platform is at the rated load.	The alarm sounds. The light on the emergency-stop button flashes on the platform and base control consoles. All functions are available.
The load on the platform is more than the rated load.	The light on the emergency-stop button continues to flash on the platform and base control consoles. The alarm continues to sound at an increased frequency. All normal MEWP movement functions are unavailable.

Remove the overload from the platform to continue the usual operation.

⚠ WARNING

Fall hazard. Do not try to free a snagged platform with the base controls until you remove all personnel from the platform. If you do not obey, there is a risk of death or serious injury.

3.5 General components

3.5-1 Circuit breaker and diagnostic switch

Refer to *Section 3.1* for the location of the circuit breaker/diagnostic switch.

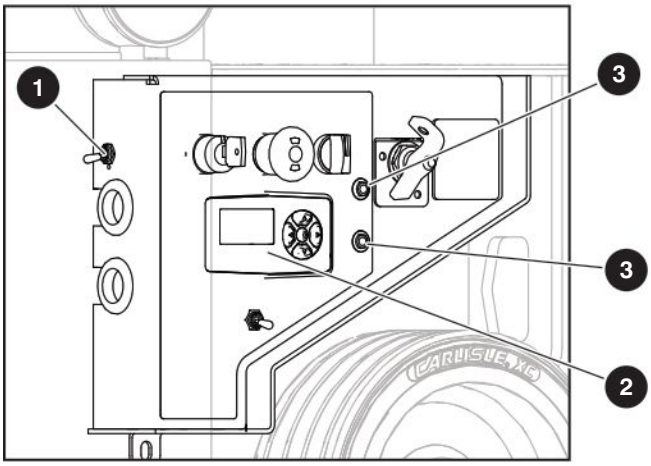

1 Diagnostic switch

The diagnostic switch is used during MEWP servicing to diagnose MEWP operation.

2 Display Panel

This display panel, located in the base controls, shows operation and parameter information. Examples are the battery state of charge, hours of operation, machine speed, and diagnostic information.

3 Power-overload circuit breaker

If a power overload occurs, the circuit breaker opens. Push the circuit breaker to reset the circuit.

⚠ WARNING

Do not use the diagnostic switch when there are personnel on the platform. The MEWP may move when you engage the diagnostic switch. If you do not obey, there is a risk of death or serious injury.

3.5-2 AC power socket on the platform

The AC power socket is a source of AC power on the platform when the plug at the base is connected to a generator or an external power supply.

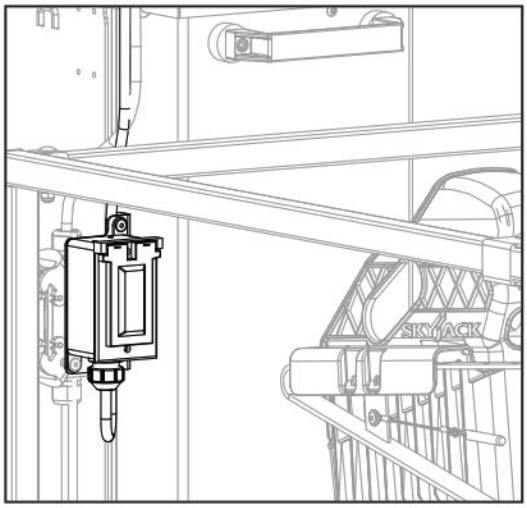

3.5-3 Battery charger

The charger is at the rear of the base. Refer to *Section 6.7* for battery charging instructions.

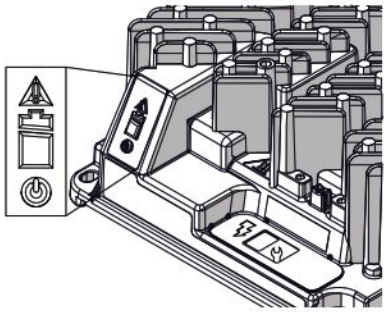

3.5-4 Motion alarm

The alarm makes a sound when a control function operates. On some MEWPs, an amber flashing light goes with this alarm.

3.5-5 Platform maintenance lock

The platform has a locking mechanism located below the platform.

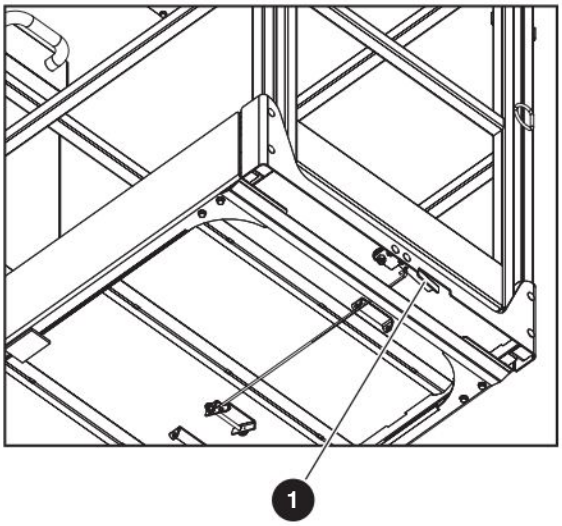

1. **Platform maintenance lock:** When it is engaged, you can move the platform to the maintenance position and open the hydraulic/electrical compartment. When the platform is in the maintenance position, all MEWP functions are disabled.

⚠ WARNING

The MEWP can move when you engage the diagnostic switch. If you use it incorrectly, death, serious injury, and/or MEWP damage can occur.

3.6 Optional equipment

⚠ CAUTION

Skyjack approved modifications and attachments can change the MEWP specifications. Refer to the applicable instructions and labels.

IMPORTANT

Refer to the labels of the optional equipment for the actual weight. Include this weight to calculate the total load on the platform. Include personnel and other materials in the total load.

The weight of the attached parts, panels, occupants, and tools put together must not be more than the rated platform capacity.

3.6-1 Secondary Guarding Lift Enable (SGLE) push-button



1. **SGLE:** This push-button energizes the lift function. Hold the button down together with the function-enable switch to enable the raising of the platform with the lift function.

NOTE

The SGLE does not have an effect on these functions: lower, drive, steer or emergency lowering.

3.6-2 Flashing Light

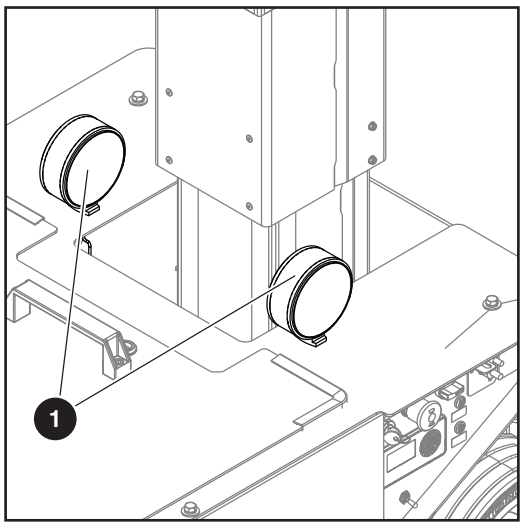

❶ **Flashing light** : The flashing light is attached to the base and flashes when a control function is enabled.

3.6-3 Elevate™ telematics - access control unit

Access control is an added function of the Elevate™ Trackunit. The access control function does not have an effect on: emergency-lowering, load sensing, the horn, and when you lower the platform. These functions are always available. The access control unit does not allow the electric motor to operate without an approved code or card.

IMPORTANT

The owner is responsible to supply PIN codes or Smart ID cards for MEWPs that have the access control function. Skyjack does not supply or reset PIN codes or Smart ID cards. Speak to the MEWP owner to help you with PIN codes or Smart ID cards that do not function, or you cannot find.

With the access control function, the user can control access to the MEWP operation. You can get unique PIN codes or Smart ID cards to unlock and start the MEWP. For this function, an Elevate™ telematics device and an access control keypad are necessary. With the Trackunit Manager, the MEWP owner can customize the access control to the MEWP (https://www.trackunit.com/services/manager/). Speak to the MEWP owner to help you with PIN codes or Smart ID cards that do not function, or you cannot find.



❶ **Orange indicator:** This light shows that the access control unit is ON. The keypad always has power regardless of the emergency-stop, off/platform/base key switch, or main power disconnect position.

❷ **Green/red indicator:** A green light shows that the access control unit is in operation. A red light that flashes shows that the keypad received a cancel input.

Operation

To operate the MEWP, the light and all of these power connections must be ON before the set time expires. This set time is the time that the MEWP owner sets for the access control operation.

- The green light on the keypad of the access control unit.
- The main power disconnect switch.
- The emergency-stop button on the base control console.
- The off/platform/base key switch.

You can also set these power connections to ON before you start the access control unit.

To operate the access control unit, use the PIN code or Smart ID card.

With the Keypad:

NOTE
This touch-sensitive keypad beeps to identify a correct input.

1. Enter the PIN code.
2. Press the **green checkmark** to confirm.
   - **Result:** The green light identifies an approved ID. Start the operation.

NOTE
If you push an incorrect button when you enter the PIN code, push the Cancel button to start again.

With the Smart ID Card:

1. Put the card in front of the reader.
2. A beep identifies that the reader read the card.
   - **Result:** The green light identifies an approved ID. Start the operation.

IMPORTANT
If the set time of the access control unit expires, enter the PIN code or tap the Smart ID card again. If there is a failure of the access control activation, speak to the MEWP owner.

IMPORTANT
The access control unit will not operate if these power connections are not ON in the set time, or if the operator disconnects them:

- **The main power disconnect switch**
- **The emergency-stop button on the base control console**
- **The off/platform/base key switch.**

IMPORTANT
To start the access control unit, enter the PIN code or tap the Smart ID card. These power connections must be in the ON position in the set time:

- **The main power disconnect switch**
- **The emergency-stop button on the base control console**
- **The off/platform/base key switch.**

Function Tests

Do the function tests as specified in *Section 4.3*.

When you do the function tests, make sure that the green light on the keypad is ON. This light confirms that the access control unit is in operation. Do the function tests for these power connections in the set time:

- The main power disconnect switch
- The emergency-stop button on the base control console
- The off/platform/base key switch.

3.6-4 Dual Height Control Console

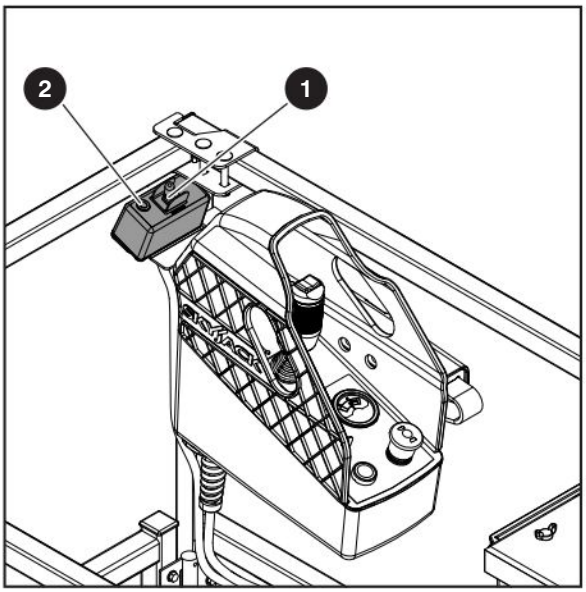

This control console limits the height of the MEWP when it is outdoor. Refer to *Section 5.4* for the operation of the dual height function.

1. Dual height: This switch selects indoor (no wind), or the outdoor (wind) position.
2. Dual height light

Dual height light	Status
On	The indoor (no wind) mode is on. The platform can go to the maximum height.
Off	The outdoor (wind) mode is on. The platform can only go to 3.96 m (13 ft)

3.6-5 ECOTray Leak Containment System

ECOTray system designed to prevent any potential leaks from hydraulic systems dripping onto floors and other internal components.

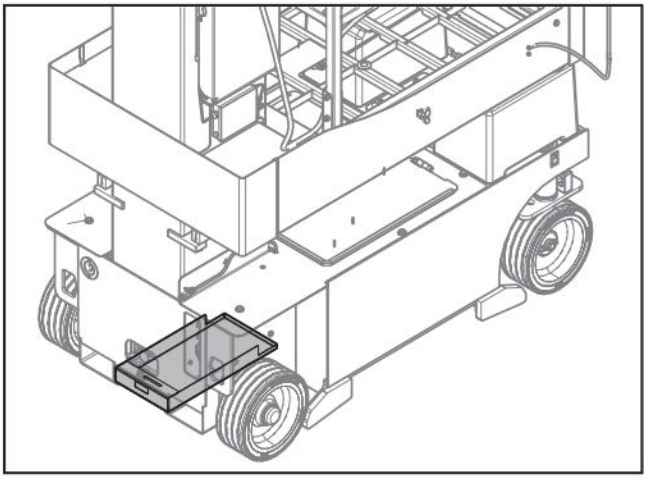

IMPORTANT

Inspect the trays daily and make sure:

- **There is no visible damage.**
- **There are no loose or missing fasteners.**
- **The absorbent pads are dry. If the absorbent pads contain hydraulic fluid, repair the leak and replace the pads.**

Notes

Section 4 – Inspections Before Operation

4.1 Operator's Responsibility

Do these tasks before each work shift and in this sequence:

1. **Visual and daily maintenance inspections** (refer to *Section 4.2*).

⚠ WARNING

Do an inspection on the MEWP for damage or loose or missing parts. If damage is found, lock and tag the MEWP and remove it from service. If you do not obey, there is a risk of death or serious injury.

2. **Function tests** (refer to *Section 4.3*).

Refer to *Section 4.4* for a checklist of the inspection items.

⚠ WARNING

If the MEWP is damaged or has been modified from the initial factory-delivered condition, without permission from Skyjack, lock and tag the MEWP. Remove the MEWP from service. If you do not obey, there is a risk of death or serious injury.

Repairs to the MEWP are tasks only for a qualified service technician. Do the visual and daily maintenance inspections and function tests again after the repairs.

Scheduled maintenance inspections are a task only for a qualified service technician.

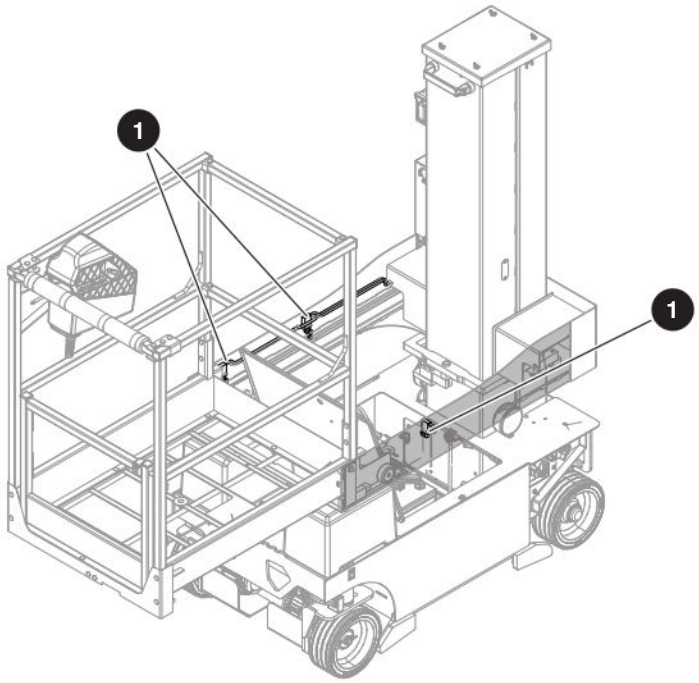

4.2 Visual and daily maintenance inspections

Do an inspection of the MEWP in this sequence.

⚠ WARNING

Do not operate a MEWP that does not function correctly. Lock and tag the MEWP, and remove it for servicing. Only a qualified service technician must repair the MEWP. If you do not obey, there is a risk of death or serious injury.

⚠ WARNING

Turn the main power disconnect switch to the off position before you do the visual and daily maintenance inspections. If you do not obey, there is a risk of death or serious injury.

⚠ CAUTION

Make sure that the MEWP is on a firm, level surface before you do the visual and daily maintenance inspections. If you do not obey, there is a risk of machine damage.

4.2-1 Labels

Refer to *Section 8* in this manual for the labels. Make sure all the labels are in the correct location, are in good condition, and you can read them.

4.2-2 Electrical

Do a check on these areas for chafed, corroded, and loose wires:

- Base to platform cables and wiring harness
- Hydraulic and electrical compartment wiring harnesses.

4.2-3 Limit Switches

Make sure the **limit switches** 1 are correctly attached with no visible damage, and the movement is not blocked.

4.2-4 Hydraulic

Do a check on these areas and make sure there are no signs of leakage:

- Hydraulic tank, filter, fittings, hoses
- All hydraulic cylinders
- All hydraulic manifolds
- The ground area below the MEWP

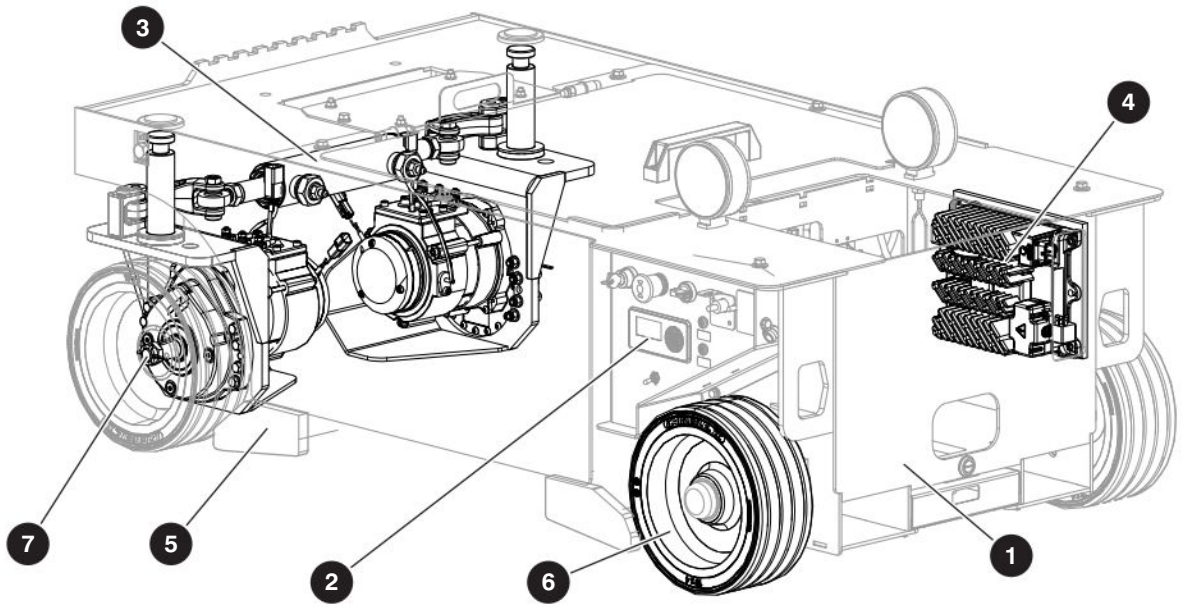

4.2-5 Base

Do the inspection that follows:

1 Base weldment

- There are no cracks in the welds or structure.
- There are no signs of deformation

2 Display Panel

- Make sure the panel is correctly attached, and there is no damage.

3 Steer cylinder assembly

- The steer cylinder assembly is correctly installed.
- There are no loose or missing fasteners.
- There is no visible damage.

4 Battery charger

- Make sure that the battery charger is correctly installed, and in good condition.
- Make sure there is no visible damage.

5 Pothole protection

- Make sure there are no visible cracks or signs of damage or deformation.

4.2-6 Wheel/tire assembly

Do the inspection that follows:

6 Wheel/tire assembly

- Do a check on all the tire treads and sidewalls for cuts, cracks, and unusual wear.
- Do a check on each wheel for damage, and cracked welds.
- Make sure the wheels are correctly aligned vertically and horizontally.
- Make sure there is no visible damage.

⚠ WARNING

Do not use tires other than the tires that Skyjack specifies for this MEWP. Do not mix different types of tires or use tires that are not in good condition. Only replace the tires with the same types that are approved by Skyjack. The use of other tires can make the MEWP less stable. If you do not obey, there is a risk of death or serious injury.

7 Wheel nuts

- Make sure the castle nut is in position and is tight.
- Make sure the cotter pin is correctly installed.

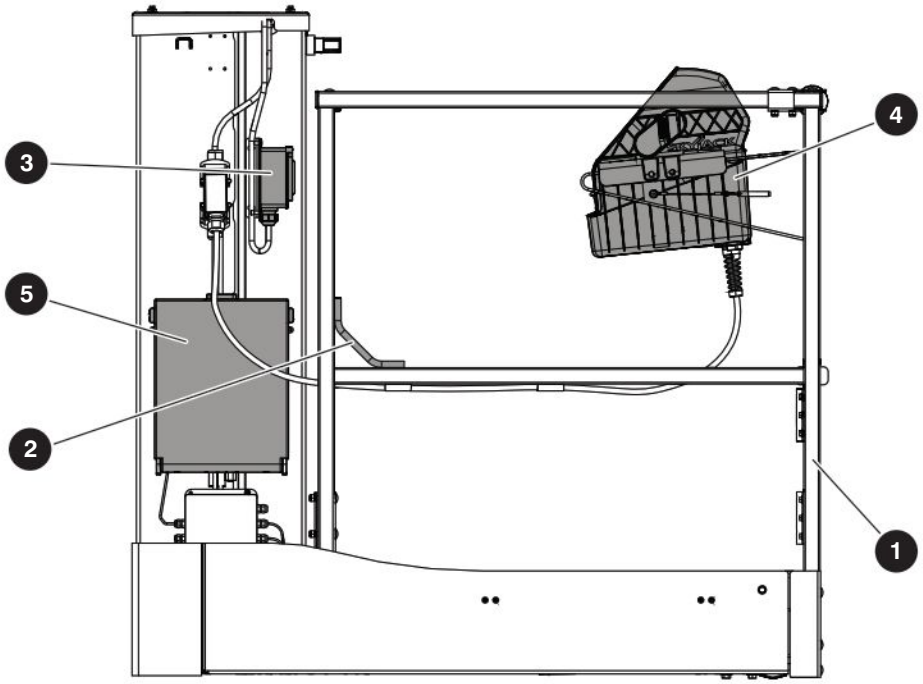

4.2-7 Platform assembly

Do the inspection that follows in sequence:

⚠ WARNING

Fall Hazard. Use the three points of contact principle when you use the MEWP to enter or exit the platform. If you do not obey, there is a risk of death or serious injury.

1. Enter the platform and close the gate.

1 Platform

- Make sure there are no loose or missing parts, and there is no visible damage.
- Make sure that all railings are correctly installed.
- Make sure that all fasteners are tight.
- Make sure that the gate is in good condition and operates correctly.
- Make sure that the platform foot pedal is in good working order and that it has no loose or missing parts and there is no visible damage.

2 Fall-protection anchorages

- Make sure that the fall-protection anchorages are correctly attached.
- Make sure the fall protection anchorages show no signs of visible damage, deformation, or cracks.

3 AC power socket

- Make sure that the socket is free of dirt or blockages.

4 Platform control console

- Make sure the control console is locked with lock-pins.
- Make sure the platform control cable is correctly locked, and there is no visible damage.

2. Exit the platform, and close the gate.

5 Manual storage box

- Make sure that the operation manual and other important documents are in the manual storage box.
- Make sure that the documents are in good condition, and you can read them.
- Always put the manuals and other documents back in the storage box after use.

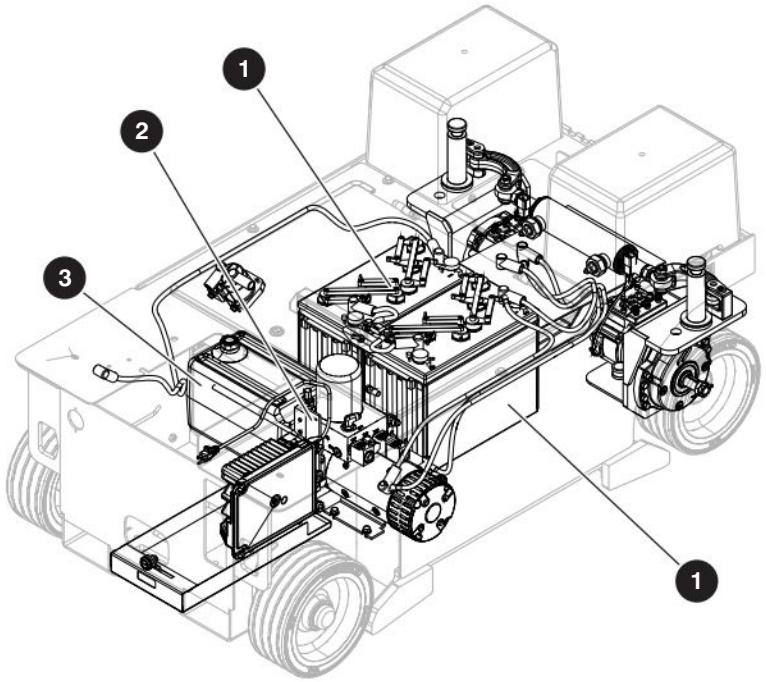

4.2-8 Hydraulic/electrical compartment

Open the hydraulic/ electrical compartment refer to *Section 6.6*. Do the inspection that follows:

1 Batteries

⚠ WARNING

Explosion hazard. Keep flames and sparks away. Do not smoke near the batteries. Batteries release explosive gas while you charge them. Charge the batteries in a well-ventilated area. If you do not obey, there is a risk of death or serious injury.

⚠ WARNING

Corrosion hazard. Do not touch battery acid. Wear the correct PPE. If the battery acid touches you, immediately flush the area with cold water and get medical aid.

1. Do an inspection of the battery case for damage.
2. Make sure all the battery connections are tight.
3. If applicable, do a check on the battery fluid levels. If the plates do not have a minimum 13 mm (1/2 inch) of solution above them, add distilled or demineralized water.

⚠ WARNING

Only use original or manufacturer-approved parts and components for the MEWP. If you do not obey, there is a risk of death, serious injury, or machine damage.

2 Manifold

- Make sure all fittings and hoses are correctly tightened.
- Make sure there is no indication of hydraulic leakage.
- Make sure there are no loose wires or missing fasteners.

3 Hydraulic tank

- Make sure the hydraulic filler cap closes tightly.
- Make sure there is no visible damage or hydraulic leaks.

Hydraulic oil level:

1. Make sure the platform is fully lowered.
2. Do a check of the **oil level** on the side of the hydraulic oil tank. The hydraulic oil level must be at or a small distance above the top mark.

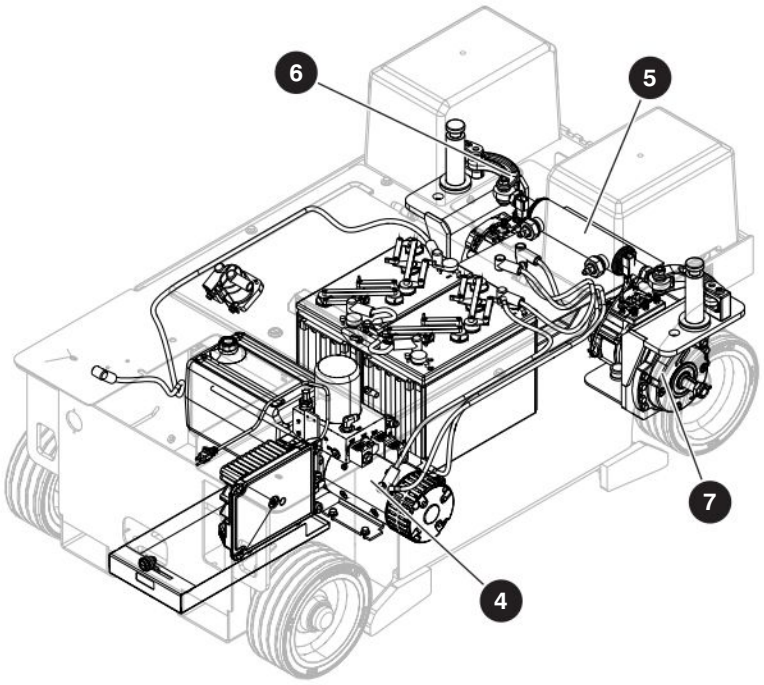

4 Hydraulic pump and motor

- Make sure there are no loose or missing fasteners.
- Make sure there is no visible damage.

5 Steer cylinder assembly

- Make sure the steer cylinder assembly is correctly installed.
- Make sure there are no loose or missing fasteners.
- Make sure there is no visible damage.

6 Steer linkages

- Make sure there are no loose or missing fasteners and lock-pins.
- Make sure the steer linkages and bushings are correctly attached.
- Make sure there is no visible damage.

7 Wheel/motor assembly

- Make sure there are no loose or missing fasteners.
- Make sure there is no visible damage.
- Make sure there are no loose or missing wires.

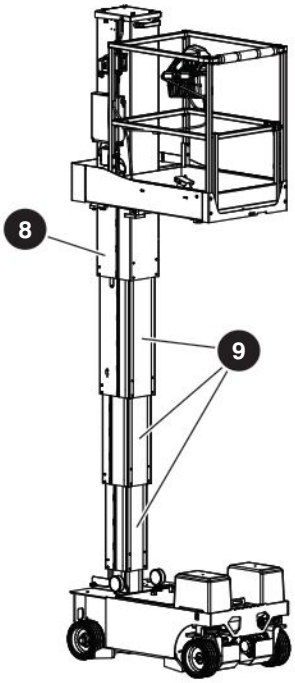

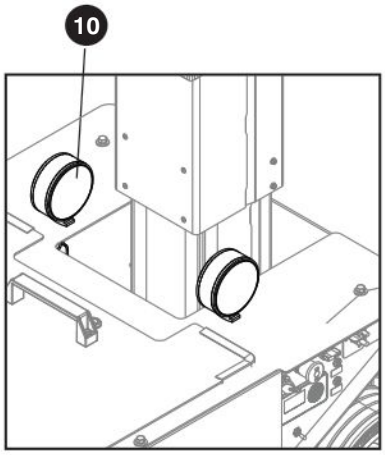

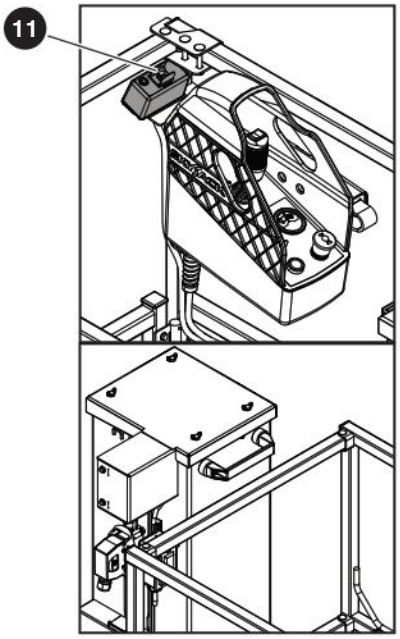

4.2-9 Lift mechanism

8 Mast assembly

- Make sure the mast assembly shows no signs of visible damage, deformation, or cracks in the weldments.

1. Complete the Function Tests in *Section 4.3*. before proceeding to the next step.
2. Raise the platform.

9 Wear pads

- Make sure the bolts are tight.
- Make sure there are no loose or missing parts.
- Make sure there is no visible damage.

4.2-10 Optional equipment and attachments

10 Flashing lights

- Make sure there are no loose or missing parts.
- Make sure there is no visible damage.

11 Dual Height Control Console

- Make sure all switches are in the neutral position, and are correctly attached
- Make sure there are no loose or missing parts.
- Make sure there is no visible damage.

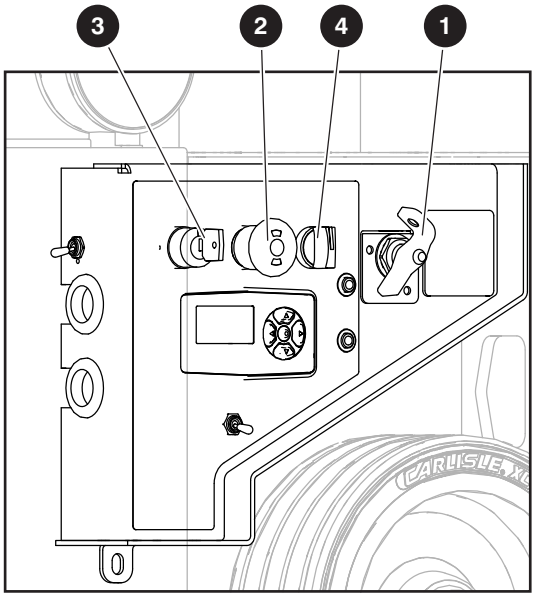

4.3 Function tests

Do the function tests in sequence.

⚠ WARNING

Do not operate a MEWP that does not function correctly. Lock and tag the MEWP, and remove it for servicing. Only a qualified service technician must repair the MEWP. If you do not obey, there is a risk of death or serious injury.

Be sure to read *Section 5* before you do the function tests.

4.3-1 Do a test of the main power disconnect switch

1. Turn the **main power disconnect** switch ❶ to the off position.
2. Pull the **emergency-stop** button ❷ on the base control console.
3. Turn and hold the **off**/**platform**/**base key** switch ❸ to the base position.
4. Turn and hold the **lower**/**neutral**/**raise** switch ❹ in the raise position.
   - **Result:** The platform does not rise.

4.3-2 Do a test of the emergency-stop button on the base

1. Turn the **main power disconnect** switch ❶ to the on position.
2. Push the **emergency-stop** button ❷.
3. Turn and hold the **off**/**platform**/**base key** switch ❸ to the base position.
4. Turn and hold the **lower**/**neutral**/**raise** switch ❹ to the raise position.
   - **Result:** The platform does not rise.

4.3-3 Do a test of the off/platform/base key switch

1. Pull the **emergency-stop** button ❷.

⚠ WARNING

Look for overhead obstructions or other possible hazards around the MEWP when you raise the platform. Do not lower the platform unless the area below is clear of personnel and obstructions. If you do not obey, there is a risk of death or serious injury.

2. Turn the **off**/**platform**/**base key** switch ❸ to the platform position.
3. Turn and hold the **lower**/**neutral**/**raise** switch ❹ to the raise position.
   - **Result:** The platform does not rise.
4. Turn and hold the **off**/**platform**/**base key** switch ❸ to the base position.

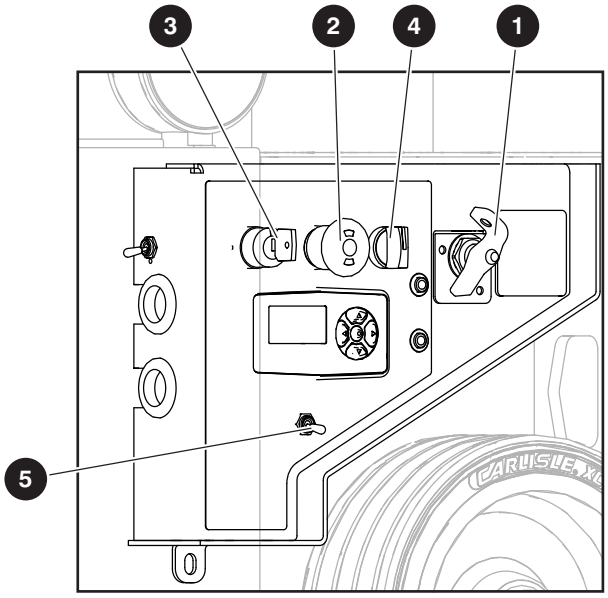

5. Turn and hold the **lower**/**neutral**/**raise** switch ❹ to the raise position.
   - **Result:** The platform rises.

4.3-4 Do a test of the lower/neutral/raise switch

1. Turn and hold the **off**/**platform**/**base key** switch ❸ to the base position.
2. Turn and hold the **lower**/**neutral**/**raise** switch ❹ to the raise position.
   - **Result:** The platform rises.
3. Turn and hold the **lower**/**neutral**/**raise** switch ❹ to the lower position.
   - **Result**: The platform lowers.

4.3-5 Do a test of the brake release function

⚠ WARNING

Runaway hazard. After you release the brakes, the MEWP rolls freely on slopes. Do not manually disengage the brakes unless the MEWP is on a level surface or the MEWP is fully restrained.

Keep the travel path clear at all times.

If you do not obey, there is a risk of death, serious injury, and/or MEWP damage.

1. Make sure that the MEWP is on firm, level ground.
2. Make sure the path of travel is clear.
3. Put wheel chocks or blocks at the front of the wheels and behind them to prevent MEWP movement.
4. Turn the **main power disconnect** switch ❶ to the on position.
5. Pull the **emergency-stop** button on the platform control console.
6. Pull the **emergency-stop** button ❷ on the base control console.
7. Turn and hold the **off**/**platform**/**base key** switch ❸ to the base position.
8. Move the brake release switch ❺ up and hold for 3 seconds.
   - **Result:** The alarm makes a sound to indicate the brake is released.
9. Remove the wheel chocks or blocks.
10. Push or pull the MEWP.
    - **Result:** The MEWP moves.
11. Put wheel chocks or blocks at the front of the wheels and behind them to prevent MEWP movement.
12. Push the **emergency-stop** button ❷.
    - **Result:** The brake is now reset.
13. Push or pull the MEWP.
    - **Result:** The MEWP does not move.

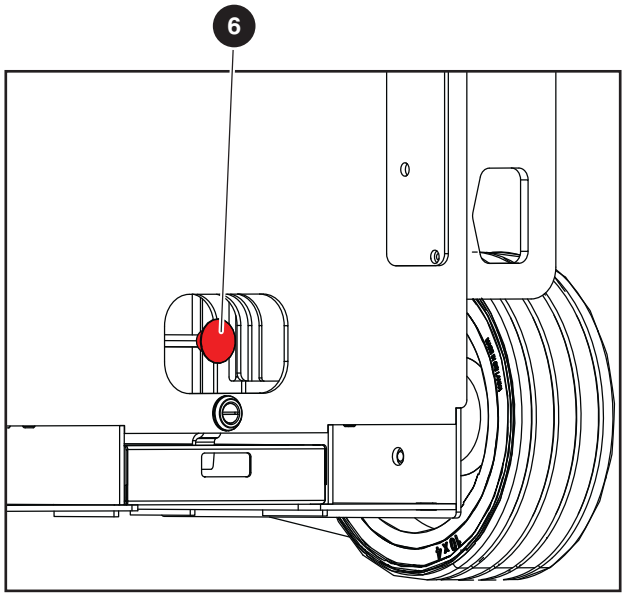

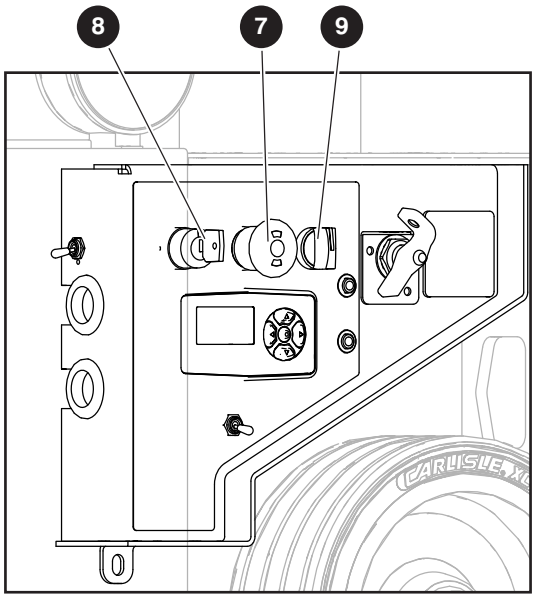

4.3-6 Do a test of the emergency-lowering function

⚠ WARNING

Look for overhead obstructions or other possible hazards around the MEWP when you raise the platform. Do not lower the platform unless the area below is clear of personnel and obstructions. If you do not obey, there is a risk of death or serious injury.

1. Raise the platform.
2. Push the **emergency-stop** button on the base control console.
3. On the rear of the base, pull out and hold the **emergency-lowering valve** ❻ to fully lower the platform.
   - **Result:** The platform fully lowers.

4.3-7 Do a test of the platform maintenance limit switch

1. Push the platform to the maintenance position, refer to *Section 6.6*.
2. Pull the **emergency-stop** button ❼ on the base control console.
3. Turn and hold the off/platform/base keyswitch ❽ to the base position.
4. Turn and hold the **lower**/**neutral**/**raise** switch ❾ to the **raise position** .
   - **Result:** The platform does not rise.
5. Push the platform to the operation position and latch it in place.

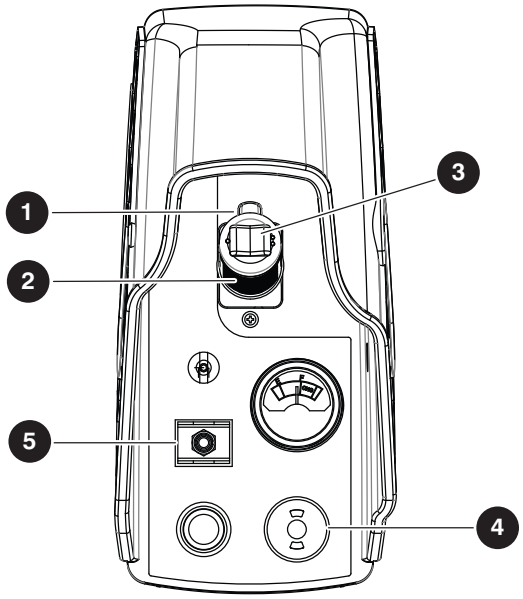

4.3-8 Do a test of the emergency-stop button on the platform

1. Make sure the **main power disconnect** switch is in the on position.
2. Pull the **emergency-stop** button on the base control console.
3. Turn the **off**/**platform**/**base key** switch to the platform position.

⚠ WARNING

Fall Hazard. Use the three points of contact principle when you use the MEWP to enter or exit the platform. If you do not obey, there is a risk of death or serious injury

4. Enter the platform and close the gate.
5. Push the **emergency stop** button ❹ on the platform control console.
6. Move the **lift**/**off**/**drive** switch ❺ to the drive position.
7. Squeeze and hold the **function-enable** switch ❶.
8. Push the **controller handle** ❷ to drive forward.
   - **Result:** The drive function does not operate.

4.3-9 Do a test of the function-enable switch

1. Make sure the path you plan to travel is clear.
2. Pull the **emergency-stop** button.
3. Move the **lift**/**off**/**drive** switch to the drive position.
4. Do not use the **function-enable** switch ❶, and try to drive the MEWP by moving the controller handle forward.
   - **Result:** The drive function does not operate.

4.3-10 Do a test of the steer function

1. Move the **lift**/**off**/**drive** switch to the drive position.
2. Squeeze and hold the **function-enable** switch.
3. Press the **steering rocker** switch ❸ on top of the **controller handle** to steer left and right.
   - **Result:** The steer wheels turn left and right.

4.3-11 Do a test of the drive function

1. Make sure the path of intended motion is clear.
2. Move the **lift**/**off**/**drive** switch ❺ to the drive position.
3. Squeeze and hold the **function-enable** switch ❶.
4. Slowly push the **controller handle** ❷ until the MEWP starts to move. Then, release the handle, so that it goes back to the center position.

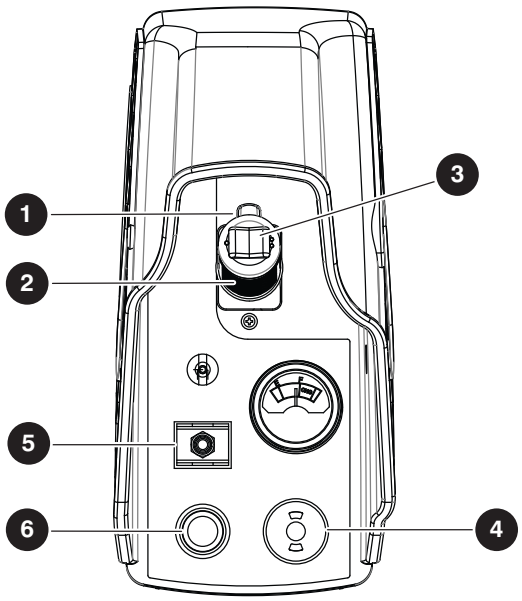

- **Result:** The MEWP moves in the forward direction and then stops.

5. Slowly pull the **controller handle** until the MEWP starts to move. Then, release the handle, so that it goes back to the center position.
   - **Result:** The MEWP moves in the opposite direction and then stops.

4.3-12 Do a test of the anti-tiedown function

1. Make sure the path of intended motion is clear.
2. Move the **lift**/**off**/**drive** switch ❺ to the drive position.
3. Squeeze and hold the **function-enable** switch ❶ for more than 7 seconds.
4. Slowly push the **controller handle** ❷ to move the MEWP in the forward direction.
   - **Result:** The MEWP does not move in the forward direction.

4.3-13 Do a test of the brakes

IMPORTANT

The MEWP will come to a short and gradual stop upon release of the function enable switch. The brakes engage instantly while driving when pushing the emergency stop button.

1. Make sure the path of intended motion is clear.
2. Move the **lift**/**off**/**drive** switch ❺ to the **drive position.**
3. Squeeze and hold the **function-enable** switch ❶.
4. Drive the MEWP forward and then rearward. Release the **controller handle ❷.**
   - **Result:** The MEWP comes to a short and gradual stop. Do not operate the MEWP if the MEWP pulls to one side while it stops. A service technician must do a check on the brake adjustments.
5. Drive the MEWP forward and then rearward. Release the **function-enable** switch ❶ only.
   - **Result:** The MEWP comes to a short and gradual stop. Do not operate the MEWP if the MEWP pulls to one side while it stops. A service technician must do a check on the brake adjustments.

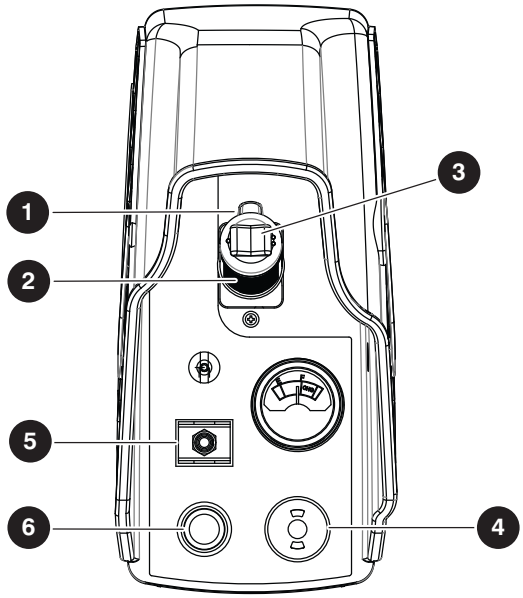

4.3-14 Do a test of the platform raise and lower functions

⚠ WARNING

Look for overhead obstructions or other possible hazards around the MEWP when you raise the platform. Do not lower the platform unless the area below is clear of personnel and obstructions. If you do not obey, there is a risk of death or serious injury.

1. Move the **lift**/**off**/**drive** switch ❻ to the **lift position** .
2. Squeeze and hold the **function-enable** switch ❶.
3. Push the **controller handle** ❷ to raise the platform by approximately 0.5 m (20 in).
   - **Result:** The platform rises.
4. Squeeze and hold the **function-enable** switch ❶.
5. Pull the **controller handle** ❷ to fully lower the platform.
   - **Result:** The platform fully lowers.

4.3-15 Do a test of the horn

1. Push the **horn** button ❻.
   - **Result:** The horn makes a sound.

4.3-16 Do a test of the elevated travel speed

⚠ WARNING

Look for overhead obstructions or other possible hazards around the MEWP when you raise the platform. Do not lower the platform unless the area below is clear of personnel and obstructions. If you do not obey, there is a risk of death or serious injury.

1. Pull the **emergency stop** button ❹.
2. Make sure the path of intended motion is clear.
3. Raise the platform approximately 1 m (3 ft 3 in) from the ground.
4. Drive the MEWP forward and then rearward.
   - **Result:** The MEWP drives slower than when it was in the lowered travel position.

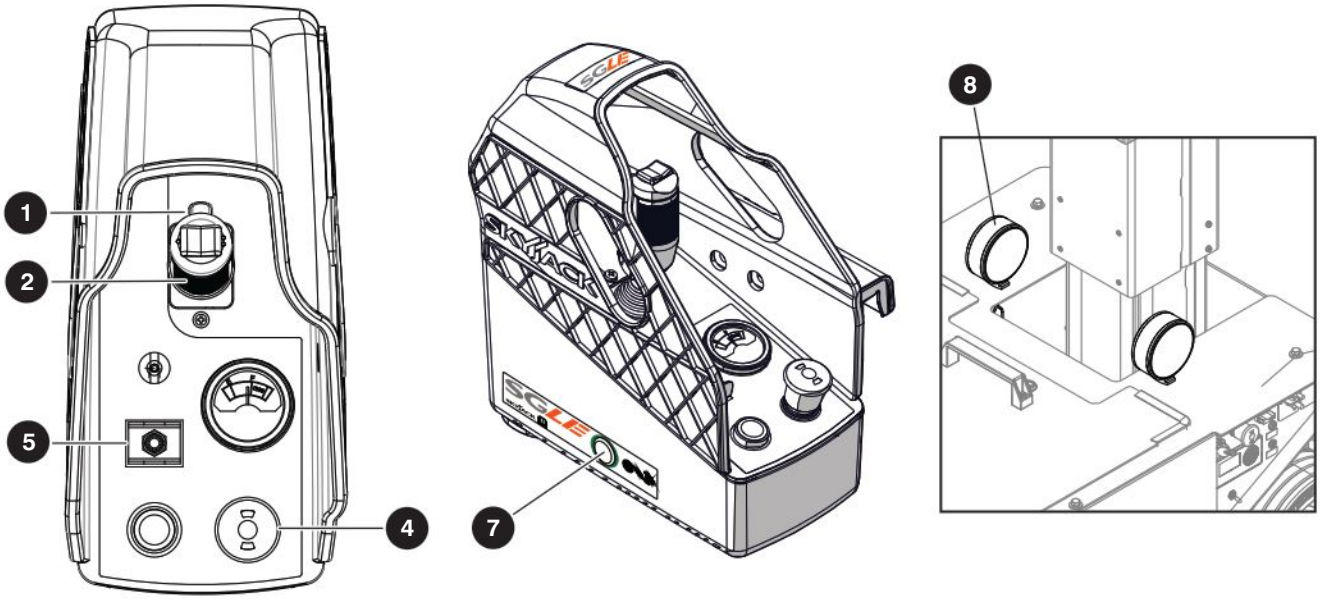

4.3-17 Do a test of the SGLE switch (optional equipment)

⚠ WARNING

Look for overhead obstructions or other possible hazards around the MEWP when you raise the platform. Do not lower the platform unless the area below is clear of personnel and obstructions. If you do not obey, there is a risk of death or serious injury.

1. Move the **lift**/**off**/**drive** switch ❺ to the **lift position**.
2. Do not squeeze the **function-enable** switch ❶ or push the **SGLE** button ❼. Push and pull the **controller handle** ❷ to raise and lower the platform.
   - **Result:** The platform does not rise or lower.
3. Push and hold the **SGLE** button only. Do not squeeze the **function-enable** switch. Push and pull the **controller handle** to raise or lower the platform.
   - **Result:** The platform does not rise or lower
4. Push and hold the **SGLE** button. Squeeze the **function-enable** switch. Push and pull the **controller handle** to raise or lower the platform.
   - **Result:** The platform rises and lowers.
5. Squeeze the **function-enable** switch only. Do not push the **SGLE** button. Push and pull the **controller handle** to raise or lower the platform.
   - **Result:** The platform lowers, but does not **rise.**

4.3-18 Do a test of the flashing light (optional equipment)

1. Make sure the path of intended motion is clear.
2. Operate the drive or lift function.
   - **Result:** The **light** ❽ flashes.
3. Stop all MEWP motion.
   - **Result:** The light does not flash.

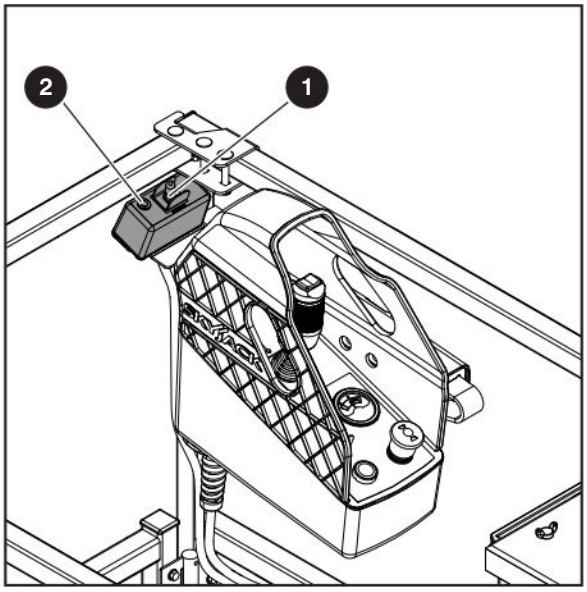

4.3-19 Do a test of the dual height control console (optional equipment)

⚠ WARNING

Look for overhead obstructions or other possible hazards around the MEWP when you raise the platform. Do not lower the platform unless the area below is clear of personnel and obstructions. If you do not obey, there is a risk of death or serious injury.

1. Make sure the MEWP is indoor or in an environment with no wind.

⚠ WARNING

Tip-over hazard. Do not move MEWP outdoors. Wind has an effect on how stable the MEWP is. If you do not obey, there is a risk of death, serious injury, and/or MEWP damage.

2. Lift the **dual height** switch ❶ and select the outdoor (wind) position.
3. Raise the platform to 4.57 m (15 ft).
   - **Result:** The platform rises to 3.96 m (13 ft) and then stops.
4. Lift the **dual height** switch and select the indoor (no wind) position.
   - **Result:** The **dual height light** ❷ turns on.
5. Raise the platform to 4.57 m (15 ft).
6. Lift the **dual height** switch and select the outdoor (wind) position.
   - **Result:** The alarm makes a sound.

⚠ WARNING

Lock and tag the MEWP, and remove it for servicing if:

- **The alarm does not make a sound,**
- **Or the lift or drive functions are not disabled when you get at the cut-off height.**

If you do not obey, there is a risk of death or serious injury.

7. Raise the platform.
   - **Result:** The platform does not rise.
8. Drive the MEWP forward.
   - **Result:** The MEWP does not move.
9. Lower the platform.
   - **Result:** The platform lowers.

4.4 Operator's checklist (Page 1 of 2)

SKYJACK

SJ20
Daily Operator's Checklist

Serial Number: _____
Model: _____
Hourmeter Reading: _____
Date: _____
Time: _____

Operator's Name (Printed): _____

Operator's Signature: _____

Each item shall be inspected using the appropriate section of the Skyjack operating manual. As each item is inspected, check or complete the appropriate box.

P PASS **N/A** NOT APPLICABLE

Add a comment if the item does not pass inspection.

	P	N/A	Comment (if item does not pass inspection)
Visual and Daily Maintenance Inspections			
Labels - Do an inspection for damaged, or missing labels			
Electrical - Do an inspection for loose, damaged, or missing components			
Limit switches - Do an inspection for loose, damaged, or missing components			
Hydraulic - Do an inspection for loose, damaged, or missing components			
Base - Do an inspection for loose, damaged, or missing components			
Base weldment			
Steer cylinder assembly			
Battery charger			
Static pothole protection			
Display panel			
Wheel/tire assembly - Do an inspection for loose, damaged, or missing components			
Wheel/tire assembly			
Wheel nuts			
Platform assembly - Do an inspection for loose, damaged, or missing components			
Platform			
Fall protection anchorages			
AC power socket			
Platform control console			
Manual storage box			
Hydraulic/electrical compartment - Do an inspection for leaks and loose, damaged, or missing components			
Batteries			
Manifold			
Hydraulic tank			
Hydraulic oil level			
Hydraulic pump and motor			
Steer cylinder assembly			
Steer linkages			
Wheel/motor assembly			
Motor controller			
Lift mechanism- Do an inspection for loose, damaged, or missing components			
Mast assembly			
Wear pads			

Page 1 of 2 *2155AA*

NOTE: *Make a copy of this page or go to www.skyjack.com for a copy that you can print.*

Operator's checklist (page 2 of 2)

	P	N/A	Comment (if item does not pass inspection)
Visual and Daily Maintenance Inspections			
Optional equipment and attachments - Do an inspection for leaks and loose, damaged, or missing components. Refer to the Operation manual for the applicable optional equipment or attachment.			
Function Tests			
Do a test of the main power disconnect switch			
Do a test of the emergency-stop button on the base			
Do a test of the off/platform/base key switch			
Do a test of the lower/neutral/raise switch			
Do a test of the brake release function			
Do a test of the emergency-lowering function			
Do a test of the emergency-stop button on the platform			
Do a test of the function-enable switch			
Do a test of the steer function			
Do a test of the drive function			
Do a test of the anti-tiedown function			
Do a test of the brakes			
Do a test of the platform raise and lower functions			
Do a test of the horn			
Do a test of the platform maintenance limit switch			
Do a test of the elevated travel speed			
Do a test of the SGLE switch			
Do a test of the flashing light			
Do a test of the dual height control console			

Page 2 of 2 *2155AA*

NOTE: *Make a copy of this page or go to www.skyjack.com for a copy that you can print.*

Notes

Section 5 – Operation

⚠ WARNING

Do not operate this MEWP without authorization and training. If you do not obey, there is a risk of death or serious injury.

Do these tasks in sequence before MEWP operation:

1. Visual and daily maintenance inspections. Refer to *Section 4.2*.
2. Function tests. Refer to *Section 4.3*.
3. Worksite inspection. Refer to *Section 2.4*.
4. If a risk assessment finds that a rescue plan is necessary, make sure you have a system of communication. The communication must be between the personnel on the platform and the selected support personnel. The selected support personnel must know how to use the base controls to lower the platform.

⚠ WARNING

Do not operate the MEWP if:

- **It does not operate correctly**
- **It is damaged or shows worn or missing parts**
- **The safety devices are tampered with or disabled**
- **It is locked and tagged for servicing or repair**
- **It was modified without permission from Skyjack and the MEWP owner.**

If you do not obey, there is a risk of death or serious injury.

5.1 Energize the base control console

1. Turn the **main power disconnect** switch to the on position.
2. Pull the **emergency-stop** button on the base control console.
3. Turn and hold the **off**/**platform**/**base key** switch to the base position.

5.2 Raise or lower the platform with the base control console

1. Energize the base control console (refer to *Section 5.1*).
2. Turn and hold the **off**/**platform**/**base key** switch to the **base position**.

⚠ WARNING

Look for overhead obstructions or other possible hazards around the MEWP when you raise the platform. Do not lower the platform unless the area below is clear of personnel and obstructions. If you do not obey, there is a risk of death or serious injury.

3. Turn and hold the **lower**/**neutral**/**raise** switch to the raise or lower position and hold it to raise or lower the platform. Release the switch to stop.

5.3 Energize the platform control console

1. Turn the **main power disconnect** switch to the on position.
2. Pull the **emergency-stop** button on the base control console.
3. Turn the **off**/**platform**/**base key** switch to the **platform position**.

⚠ WARNING

Fall Hazard. Use the three points of contact principle when you use the MEWP to enter or exit the platform. If you do not obey, there is a risk of death or serious injury.

4. Enter the platform.
5. Close the gate.
6. Pull the **emergency-stop** button on the platform control console.

5.4 Raise or lower the platform with the platform control console

1. Energize the platform control console (refer to *Section 5.3*).

⚠ WARNING

Tip-over hazard. If equipped, use the wind rating to select the correct height mode—indoor (no wind) or outdoor (wind) before you raise the MEWP. If you do not obey, there is a risk of death, serious injury, and/or MEWP damage.

2. If equipped, lift the **dual height** switch and select the indoor (no wind) or outdoor (wind) position.

⚠ WARNING

Look for overhead obstructions or other possible hazards around the MEWP when you raise the platform. Do not lower the platform unless the area below is clear of personnel and obstructions. If you do not obey, there is a risk of death or serious injury.

3. Move the **lift**/**off**/**drive** switch to the **lift position**.
4. Squeeze and hold the **function-enable** switch.
5. Move the **controller handle** forward or rearward to go to the necessary height.

NOTE

The lowering function is not proportional.

6. Move the **controller handle** to the neutral central position to stop. Release the **function-enable** switch.

⚠ WARNING

Push the emergency-stop button when you are at the necessary location or elevation. This prevents unintended MEWP movement. If you do not obey, there is a risk of death or serious injury.

⚠ WARNING

If the tilt alarm makes a sound, and the platform does not raise:

1. **Fully lower the platform immediately.**
2. **Make sure the MEWP is on a firm, level surface.**

If you do not obey, there is a risk of death or serious injury.

5.5 Drive forward or rearward

⚠ WARNING

Make sure there are no personnel or obstructions in the path of travel. Acquaint yourself with the blind spots of the MEWP. If you do not obey, there is a risk of death or serious injury.

⚠ WARNING

Do not drive the MEWP elevated in areas where electrical cables or debris are in the path of travel. If you do not obey, there is a risk of death or serious injury.

1. Energize the platform control console (refer to *Section 5.3*).
2. Move the **lift**/**off**/**drive** switch to the drive position.
3. Squeeze and hold the **function-enable** switch.
4. Move the **controller handle** forward or rearward to drive at and in the necessary speed and direction.
5. Move the **controller handle** to the neutral central position to stop. Release the **function-enable** switch.

⚠ WARNING

Push the emergency-stop button when you are at the necessary location or elevation. This prevents unintended MEWP movement. If you do not obey, there is a risk of death or serious injury.

⚠ CAUTION

The pothole protection relies on stable ground clearance. If the total MEWP weight is ever on the pothole protection, immediately lower the platform, and lock and tag the MEWP. A qualified service technician must do a complete inspection. If you do not obey, there is a risk of MEWP damage.

5.6 Steer

1. Energize the platform control console (refer to *Section 5.3*).
2. Move the **lift**/**off**/**drive** switch to the drive position.
3. Squeeze and hold the **function-enable** switch.
4. Push the **steering rocker** switch on top of the **controller handle** in one of the two directions to steer.

NOTE

The steer function is not proportional. Drive and steer functions can be active at the same time.

5.7 Platform Traversing

1. To traverse the platform, step on the foot pedal on the platform ❶ and grasp the platform repositioning handle ❷ then carefully push/pull the platform until desired location is reached.

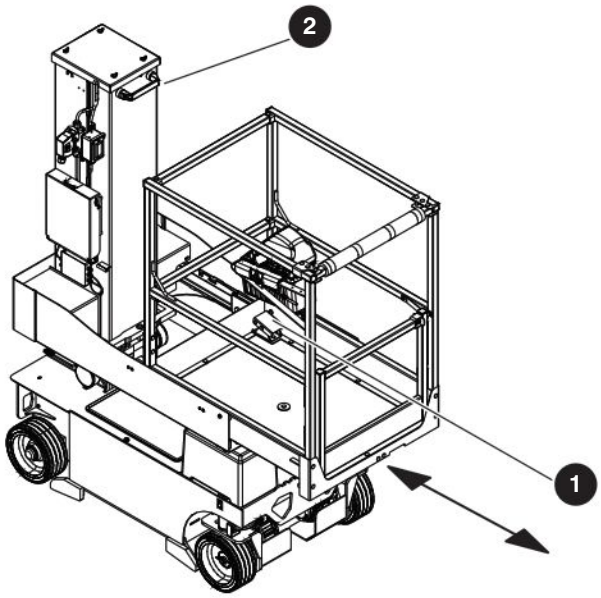

2. Ensure the foot pedal ❶ rests in one of the locking slots.

5.8 Raise and lower with the SGLE platform control console (optional equipment)

1. Energize the platform control console (refer to *Section 5.3*).
2. Move the **lift**/**off**/**drive** switch to the **lift position**.

⚠ WARNING

Look for overhead obstructions or other possible hazards around the MEWP when you raise the platform. Do not lower the platform unless the area below is clear of personnel and obstructions. If you do not obey, there is a risk of death or serious injury.

3. Push and hold the **SGLE** push-button and squeeze the **function-enable** switch.
4. Push the **controller handle** until you are at the necessary height.
5. Squeeze the **function-enable** switch.
6. Pull the **controller handle** to lower the platform.

NOTE

The SGLE does not have an effect on these functions: lower, drive, steer, or emergency-lowering.

7. Release the **controller handle** until it goes back to the center position to stop. Release the **function-enable** switch.

5.9 MEWP shutdown

⚠ WARNING

Look for overhead obstructions or other possible hazards around the MEWP when you raise the platform. Do not lower the platform unless the area below is clear of personnel and obstructions. If you do not obey, there is a risk of death or serious injury.

1. Select a reasonably well-protected location to park the MEWP. This location must have a firm, level surface, clear of obstructions, and traffic.
2. Fully lower the platform.
3. Push the **emergency-stop** button.

⚠ WARNING

Fall Hazard. Use the three points of contact principle when you use the MEWP to enter or exit the platform. If you do not obey, there is a risk of death or serious injury.

4. Exit the platform.
5. Turn the **off**/**platform**/**base key** switch to the **off position** on the base control console and remove the key.
6. Push the **emergency-stop** button.
7. Turn the **main power disconnect** switch to the **off position**.

Section 6 – Additional Procedures

6.1 Use the emergency-lowering function

With the emergency-lowering system, you can lower the platform if there is a failure of the primary power.

⚠ WARNING

Crush hazard. Keep clear of the lift mechanism when you use the emergency-lowering function. If you do not obey, there is a risk of death or serious injury.

1. Remove obstructions before you lower the platform.
2. If necessary, retract the extension platform or move the MEWP to clear an obstruction.
3. Push the **emergency-stop** button on the base control console.

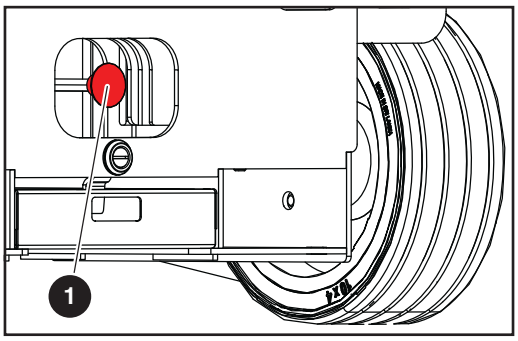

4. Find the emergency-lowering valve ❶ at the rear of the base.

⚠ WARNING

Look for overhead obstructions or other possible hazards around the MEWP when you raise the platform. Do not lower the platform unless the area below is clear of personnel and obstructions. If you do not obey, there is a risk of death or serious injury.

5. Pull out and hold the emergency-lowering valve to fully lower the platform.

6.2 Release the brakes

⚠ WARNING

Runaway hazard. After you release the brakes, the MEWP rolls freely on slopes. Do not manually disengage the brakes unless the MEWP is on a level surface or the MEWP is fully restrained.

Keep the travel path clear at all times.

If you do not obey, there is a risk of death, serious injury, and/or MEWP damage.

1. Make sure that the MEWP is on firm, level ground.
2. Turn the **main power disconnect** switch to the **on position**.
3. Pull the **emergency-stop** button on the platform control console.
4. Pull the **emergency-stop** button on the base control console.
5. Turn and hold the **off**/**platform**/**base key** switch to the base position
6. Move the **brake release switch** up and hold for 3 seconds. The alarm makes a sound to indicate the brake is released.
7. Push the **emergency-stop** button to engage the brakes.

6.3 Use the platform control console from the ground

⚠ WARNING

The correct operator location is with the platform control console attached to the right-front side of the platform. Only operate the MEWP from the ground in these conditions:

- **To do maintenance**
- **When you cannot do work safely from the position of the operator on the platform because of an obstruction**

If you do not obey, there is a risk of death or serious injury.

6.3-1 Remove the platform control console

⚠ WARNING

Fall hazard. Use the three points of contact principle when you use the MEWP to enter or exit the platform. If you do not obey, there is a risk of death or serious injury.

1. Enter the platform and close the gate.
2. Remove the **control console mounting bracket lock-pin** ❶ from the mounting bracket. Remove the **platform control console** from the mounting bracket.

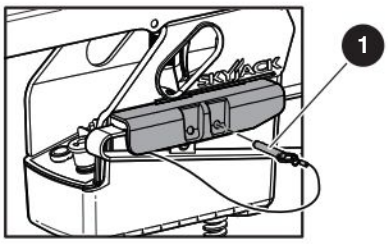

3. Put the **platform control console** down on the platform floor.
4. Exit the platform and close the gate.

6.3-2 Operate the MEWP from the ground

⚠ WARNING

Make sure the operator and the platform control console point in the same direction as the front of the MEWP.

Do not drive the MEWP toward yourself.

Keep away from crush hazards. Stay clear of the MEWP and out of the direction of travel.

When you use a ramp to drive the MEWP on to or remove it from a transport vehicle, make sure all personnel, which includes the operator:

- **Stay away from the direction of a possible tip-over of the MEWP.**
- **Stay out of the path of movement of the MEWP down the ramp.**

If you do not obey these instructions, there is a risk of death or serious injury.

⚠ CAUTION

Make sure the platform control console does not become entangled with the MEWP or objects that surround the MEWP. If you do not obey, there is a risk of MEWP damage.

1. Before you operate the MEWP, do a full worksite inspection to identify possible hazards in your work area. Refer to *Section 2.4*.
2. Cordon-off the pathway you plan to travel.

⚠ WARNING

Crush hazard. Make sure that there are no personnel in the path you will travel. Tell personnel around the path before you move the MEWP. Use a second person to monitor the movement of the MEWP. Make sure that person stays at a safe distance. If you do not obey, there is a risk of death or serious injury.

3. Stay behind or to the side of the MEWP.
4. Move the **lift**/**off**/**drive** switch to the drive position.
5. Use as low a speed as practical to drive the MEWP forward to the necessary location.
6. Push the **emergency-stop** button when the MEWP is at the necessary location.
7. Turn the **main power disconnect** switch to the off position.

⚠ WARNING

Fall hazard. Use the three points of contact principle when you use the MEWP to enter or exit the platform. If you do not obey, there is a risk of death or serious injury.

8. Enter the platform and close the gate.

⚠ CAUTION

Make sure each lock-pin is correctly installed with the detent ball of each lock-pin fully through the hole.

9. Install the **platform control console** onto the mounting bracket. Install the **lock-pin** in the mounting bracket.

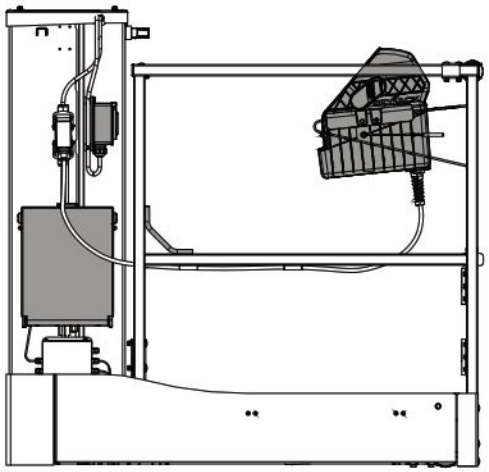

⚠ WARNING

Fall hazard. Use the three points of contact principle when you use the MEWP to enter or exit the platform. If you do not obey, there is a risk of death or serious injury.

10. Exit the platform and close the gate.

6.4 Push, Winch and Tow the MEWP

⚠ WARNING

Tip-over hazard. Make sure the platform is fully lowered before you push, winch, or tow, unless movement is necessary to clear an obstacle. Sudden movement can cause the MEWP to become unstable.

In emergency situations where the MEWP functions are not available, and an obstruction prevents the platform lower function, carefully move the MEWP sufficiently far away to clear the obstruction. Do not move at a speed faster than 50 mm/sec (2 in/sec).

If you do not obey, there is a risk of death, serious injury, and/or MEWP damage.

⚠ WARNING

Runaway hazard. After you release the brakes, the MEWP rolls freely on slopes. Do not manually disengage the brakes unless the MEWP is on a level surface or the MEWP is fully restrained.

Keep the travel path clear at all times.

If you do not obey, there is a risk of death, serious injury, and/or MEWP damage.

⚠ WARNING

When you push, winch, or tow, do not move the MEWP at a speed faster than 3.2 km/h (2.0 mph). If you do not obey, there is a risk of death or serious injury.

⚠ WARNING

Tip-over hazard. Disengage the brakes manually before you push, winch, or tow the MEWP. If you do not obey, there is a risk of death or serious injury.

1. Release the brakes manually. Refer *to Section 6.2.*
2. Push, winch, or tow the MEWP to the necessary location.
3. Put the MEWP on a firm, level surface.
4. Push the **emergency-stop** button to reset the brake.

⚠ WARNING

Engage the brakes immediately after the MEWP is at the necessary location. If you do not obey, there is a risk of death or serious injury.

6.5 Move the MEWP for transport

When you drive a MEWP onto or remove it from a transport vehicle, on a public road, give protection to the person(s) involved. Protection can include:

- Warning cones
- Road signs and signaling devices
- Applicable personal protective equipment, such as reflective clothing
- Flag personnel to warn other vehicles of the MEWP and other related vehicles
- Other applicable control measures.

Obey all the national, state/provincial/territorial, and local safety rules when you move the MEWP for transport. Only qualified personnel with authorization must drive the MEWP on to or remove it from a transport vehicle.

Be sure the vehicle capacity and load equipment, hoists, chains, straps, and other related items are sufficient to withstand the maximum MEWP weight.

Park the transport vehicle on a level surface. Use wheel chocks or blocks to prevent unintended vehicle movement during this operation.

6.5-1 Hoist the MEWP

⚠ WARNING

Only qualified riggers must operate the machinery during a lift.

When you hoist the MEWP, you must:

- Turn the **main power disconnect** switch to the off position.
- Retract and secure the traversing platform.
- Attach the platform control console to the mounting bracket, or remove the **platform control console.**
- Remove all personnel, tools, and materials from the platform.
- Attach the rigging to all **four lift points** ❶. Refer to *Figure 03* & *Figure 04.*

NOTE

*For the weight of the MEWP, refer to Section 7.3 Horizontally, the **center of gravity** is approximately in the middle of the MEWP, front to back and side to side. Refer to Figure 05. Vertically, the center of gravity is approximately a small distance above the chassis.*

6.5-2 Drive and tie-down the MEWP

Before you drive the MEWP:

- The ramp or dock capacity must be able to hold the maximum MEWP weight.
- Use side guards (if available) to prevent a fall from the ramp.
- The incline of the ramp must not exceed the MEWP gradeability. Refer to *Section 7.3*.
- Do a test of the MEWP brakes to make sure they operate correctly.

⚠ WARNING

When you transport the MEWP, it must be attached to a truck or trailer deck. Use the available tie-down points to attach the MEWP. If you do not obey, there is a risk of death or serious injury.

- Tie-down the MEWP to the transport vehicle using the four **tie-down points** ❶. Refer to *Figure 03.*

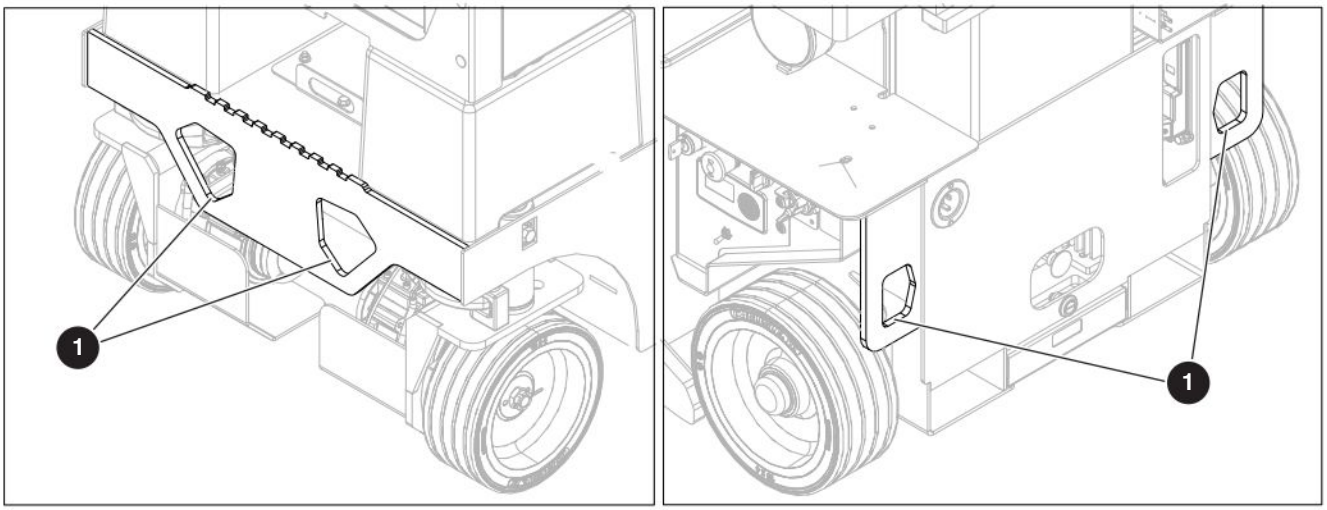

Figure 03 *Tie-down and lift points*

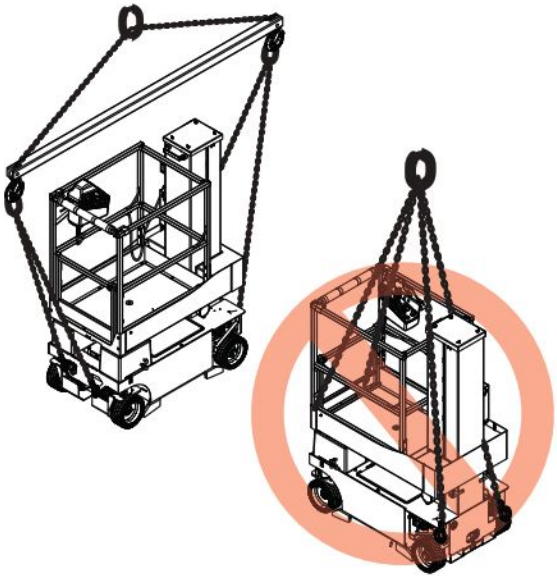

Figure 04 *Appropriate method to hoist*

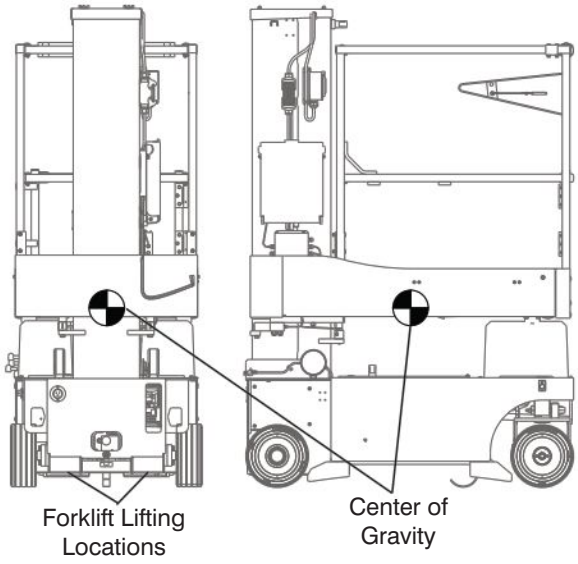

Figure 05 *Center of gravity and forklift lift locations*

NOTE

For the weight of the MEWP, refer to Section 7.3. The center of gravity is approximately in the middle of the MEWP, front to back and side to side. Refer to Figure 05. Vertically, the center of gravity is approximately a small distance above the base..

NOTE

A forklift truck can lift the MEWP from the back. Lift with the forks in the forklift lift locations as shown in Figure 05.



Gradeability 25%: Climbing reverse, descending forward
Gradeability 25%: Climbing forward, descending reverse

Figure 06 *Maximum gradeability of inclined drive*

⚠ CAUTION

Make sure you use the correct lift method. An incorrect lift method, such as the one in *Figure 04*, can cause damage to the MEWP.

6.6 Open the hydraulic/ electrical compartment

1. Make sure that the MEWP is on firm, level ground.
2. Fully lower the platform.

⚠ WARNING

The following procedure must be done from the ground outside of the platform. If you do not obey, there is a risk of death or serious injury.

3. Turn the main power disconnect off.
4. Press the **foot pedal** ❶ on the platform.
5. Push the platform until the maintenance lock engages.

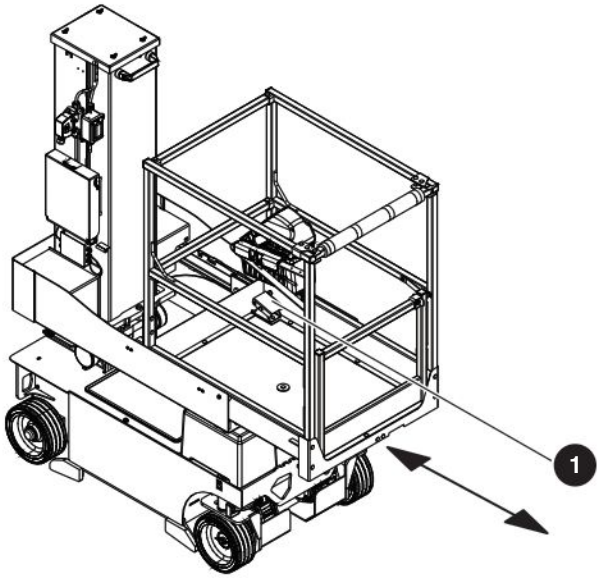

6. Locate the platform maintenance lock mechanism underneath the platform.
7. Pull and hold the **handle** ❷ to unlatch the platform locking mechanism.
8. Fully pull the platform to the maintenance position.

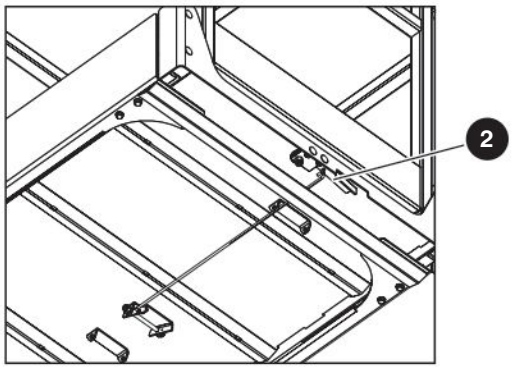

9. Open the hydraulic/electrical compartment cover.

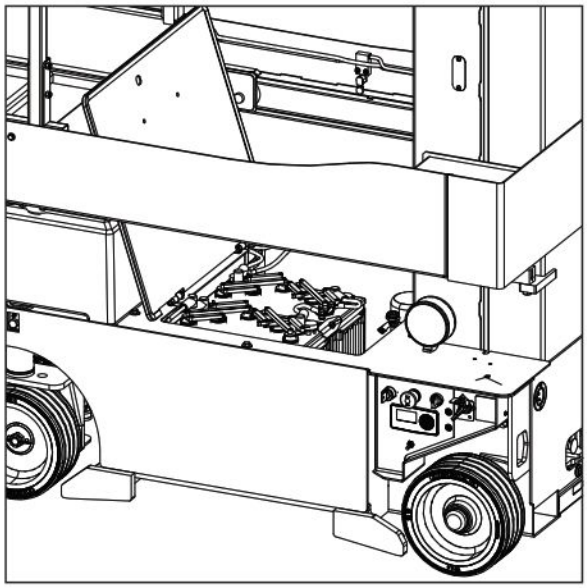

6.7 Charge the Battery

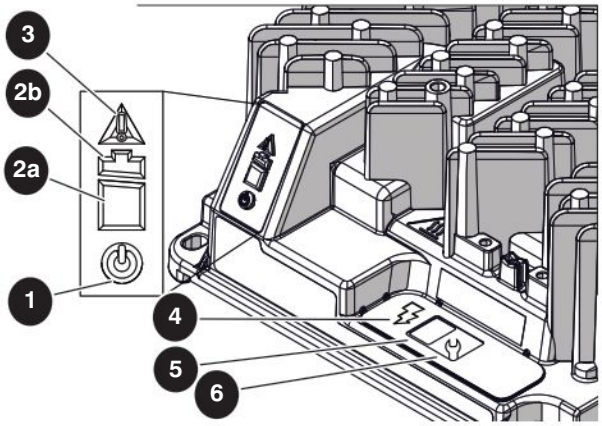

No.	Indicator type	Condition	Description
1	AC power	Blue	Battery charger is connected to the AC power.
2a	*Battery charge <80%*	Green flash	Low charge— continue to charge.
		Solid green	High charge—continue to charge.
2b	*Battery charge >80%*	Green flash	High charge—continue to charge or stop the charge.
		Solid green	Charge complete—stop the charge.
3	*Fault/ error*	*Solid red*	*Charger fault*—refer to the service manual.
		Amber flash	*Error found*—refer to the service manual.
4	*Charge output*	*Solid yellow*	*Charger output is on.*
5	*Charge profile/ error display*	*Algorithm or fault/ error code*	*N/A.*
6	*Select charge profile*	*Charge algorithm*	*N/A.*

⚠ WARNING

Electrocution hazard. Do not put the charger in water. If you do not obey, there is a risk of death or serious injury.

⚠ WARNING

Burn hazard. Do not touch the surface of the charger when it is in operation, especially in higher temperature environments. Let the charger cool before you touch it. If you do not obey, there is a risk of death or serious injury.

1. Supply sufficient airflow for the batteries and the charger.

NOTE

Do not let materials or fabric be on the charger. It is necessary for the charger to have access to cool air for it to operate correctly. Clean the charger cooling fins if they are clogged with debris to make sure the charger functions at its best.

2. Do a visual and manual inspection of the DC output wires and terminals. Make sure they are in good condition before each use.

⚠ WARNING

Explosion hazard. Be careful when you use fuels, solvents or other flammable materials near the charger or batteries. A spark from the charger or batteries can cause a fire or explosion. If you do not obey, there is a risk of death or serious injury.

3. Connect the power supply cable to a correctly grounded socket between 100 to 240 VAC, 50/60 Hz. The charger automatically senses and adjusts to the voltage range of the AC input.

NOTE

The charger starts automatically in 4-6 seconds, regardless of the remaining battery charge (down to 1 VDC terminal voltage). The LEDs show that the charge continues.

NOTE

Many conditions have an effect on the battery charge time. These include: the battery amp-hour capacity, the remaining charge, the temperature, and the condition (new, used, and defective). More time is necessary to charge batteries that are larger than 240 AH.

⚠ WARNING

Explosion hazard. Do not disconnect the DC output wires near the batteries when the charger is ON. This can cause an arc, which can then cause the batteries to explode. You must disconnect the AC power supply cable from its socket, and then the charger DC connections. If you do not obey, there is a risk of death or serious injury.

⚠ WARNING

Electrocution hazard. Do not touch parts of the charger output wires that are not insulated, the battery connector, or the battery terminals. If you do not obey, there is a risk of death or serious injury.

⚠ WARNING

Do not charge the batteries in hazardous areas.

Notes

Section 7 – Specifications

7.1 Standard and optional equipment

Models	SJ20
STANDARD EQUIPMENT	
Maximum drive height	Full Height
Variable speed, front two wheel electric drive	*
Zero-inside turn radius	*
Dual holding brakes	*
Proportional controls	*
24V DC power source	*
Low-voltage battery protection	*
Solid rubber, non-marking tires	*
AC socket on platform	*
Tilt alarm with drive and lift cut-out	*
All-motion audible alarm	*
Fall-protection anchorages	*
Operator horn	*
Lift lugs and tie-downs	*
Color-coded and numbered wiring system	*
Platform traversing	*
Half heigh spring-hinged gate	*
Grey non-marking tires	*
OPTIONAL EQUIPMENT	
Flashing light	*
Saloon spring-hinged gate	*
Dual height control console	*
Lowering-only alarm	*
Secondary guard lift enable (SGLE)	*
Elevate telematics	*
Light-duty pipe rack	*
Tool tray	*
Tube caddy	*

2063AA

7.2 Owner's annual inspection record

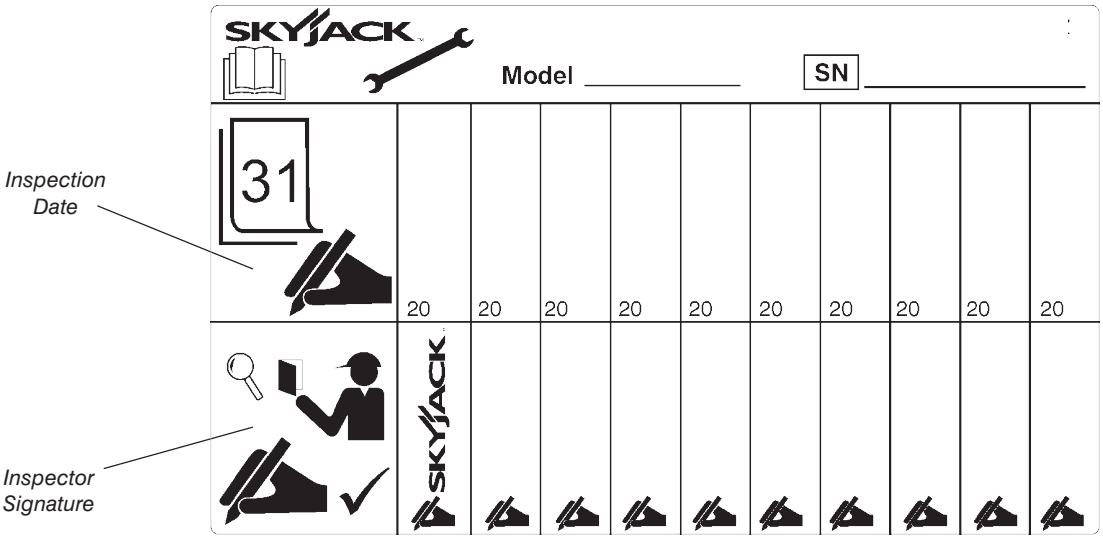

⚠ WARNING

Do not use the MEWP if there is no inspection recorded in the last 13 months. If you do not obey, there is a risk of death or serious injury.

IMPORTANT

The Owner's annual inspection record is located on the mast assembly. It must be filled out after an annual inspection has been completed. Do not use the MEWP if an inspection has not been recorded in the last 13 months.

7.3 Specifications

Model	SJ20
Weight *	1107 kg (2440lb)
Overall Width	0.80 m (31.5 in)
Overall Length	1.37 m (54 in)
Platform Size (Inside)	0.69 m x 0.91 m (27.13 in x 35.66 in)
Platform Traversing	0.41 m (16 in)
Height	
Working Height	7.77 m (25 ft 6 in)
Platform Elevated Height	5.94 m (19 ft 6 in)
Stowed Platform Height (Railings Up)	2.01 m (79.19 in)
Drive Height	Full
Stowed Platform Height	0.75 m (29.7 in)
Standard Operating Times	
Lift Time (Rated Load)	26 s
Lower Time (Rated Load)	26 s
Chassis	
Stowed Drive Speed	4 km/h (2.5 mph)
Elevated Drive Speed	0.5 km/h (0.3 mph)
Gradeability (Ramp Angle [Reverse/Forward])**	25% / 25%
Tires (Solid Rubber)	10 in x 4 in
Hydraulic Oil	
Type	ATF Dexron III
Tank Capacity	5.3 l (1.41 gal)

2064AA

** Weights are approximate; refer to the serial nameplate for the specific weight.*

7.4 Environment

Model	SJ20
Electromagnetic Compatibility (EMC)	Meets requirements of ISO 13766-1:2018
Hazardous Location Rating	MEWP not rated for hazardous locations with potentially flammable gases, explosive gases or particles
Operating Temperatures	
Standard	-20°C (-4°F) to +40°C (+104°F)

2065AA

7.5 Maximum platform capacities (evenly distributed)

Model		Wind Rating	Total Platform Capacity		Traversing Platform Capacity		Manual Side Force	Tilt Cutout Setting (side-to-side x front-to-back)
SJ20	Indoor	0 m/s (0 mph)	159 kg (350 lb)	1 person	159 kg (350 lb)	1 person	200 N (45 lbf)	1.5° x 2.5°

2066AA

NOTE

Occupants and materials are not to exceed the rated load. Refer to the capacity label at the entrance of the platform and the mast assembly. For additional information and models equipped with options.

7.6 Floor loading capacity

Model		Total MEWP Weight	Total MEWP Load		
			Wheel**	LCP***	OFL***
SJ20	min*	1107 kg (2440 lb)	276 kg (609 lb)	792 kPa (115 psi)	9.9 kPa (207 psf)
	max*	1264 kg (2787 lb)	426 kg (940 lb)	1021 kPa (148 psi)	11.3 kPa (237 psf)

2067AA

* **Min:** Minimum MEWP weight (Unloaded platform, no options/attachments)
Max: Maximum MEWP weight (Platform loaded to capacity with options/attachments)

** **Wheel** is the weight that can be experienced on one wheel.
Note: *This is more than 25% of the machine weight due to possible weight distribution over the machine and platform.*

*** **LCP:** Local Concentrated Pressure is a measure of how hard the MEWP presses on the area in direct contact with the floor/tire.
OFL: Overall Floor Load (Pressure) is a measure of the average load the MEWP imparts on the whole surface directly underneath the chassis. This has been calculated by dividing the MEWP weight by the overall floor area occupied by the MEWP (on wheels).

Note: *The floor covering (e.g., tile, carpet, etc.) or the structure (e.g., beams) of the operating surface must be able to withstand more than the values indicated above.*

NOTE

The **LCP** *or* **OFL** *that an individual surface can withstand varies from structure to structure and is generally determined by the engineer or architect for that particular structure.*

⚠ WARNING

Do not use tires other than the tires that Skyjack specifies for this MEWP. Do not mix different types of tires or use tires that are not in good condition. Only replace the tires with the same types that are approved by Skyjack. The use of other tires can make the MEWP less stable. If you do not obey, there is a risk of death or serious injury.

Notes

Section 8 – Labels

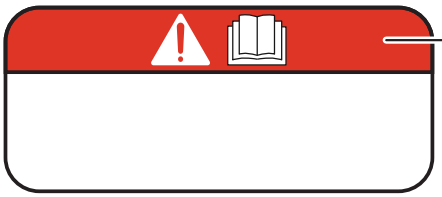

Red
DANGER.

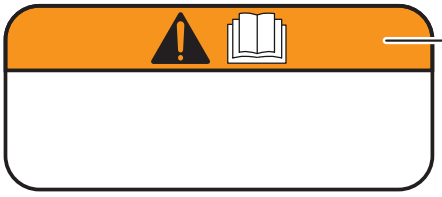

Orange
WARNING.

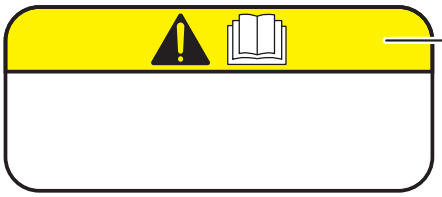

Yellow
CAUTION.

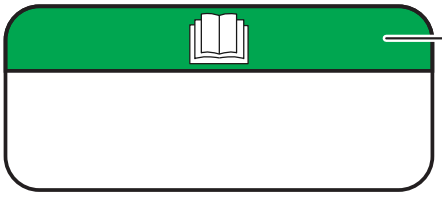

Green
Emergency-lowering procedure.

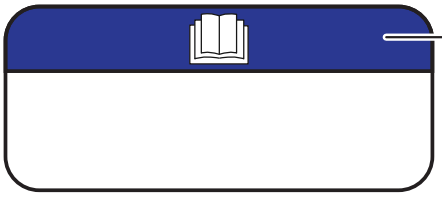

Blue
Safety information.

8.1 Labels

8.1-1 Rear view

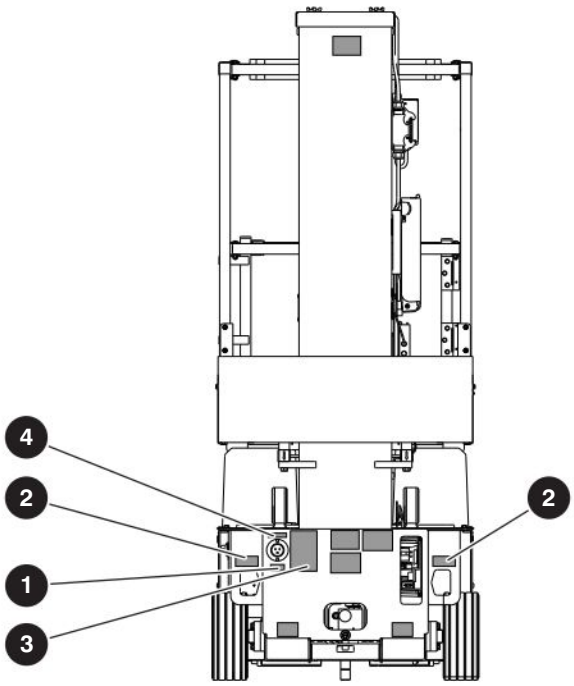

Description	Label pictorial
1 Skyjack manufactured date Shows the month and year of manufacture for this MEWP.	
2 Lift and tie-down points Only use these points to lift or tie-down the MEWP.	
3 Serial plate* MEWP identification and specifications. **The serial plate information changes with different MEWPs.*	
4 AC power plug Connect the AC supply here.	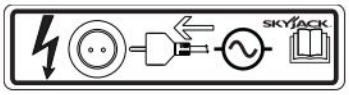

Rear view (continued)

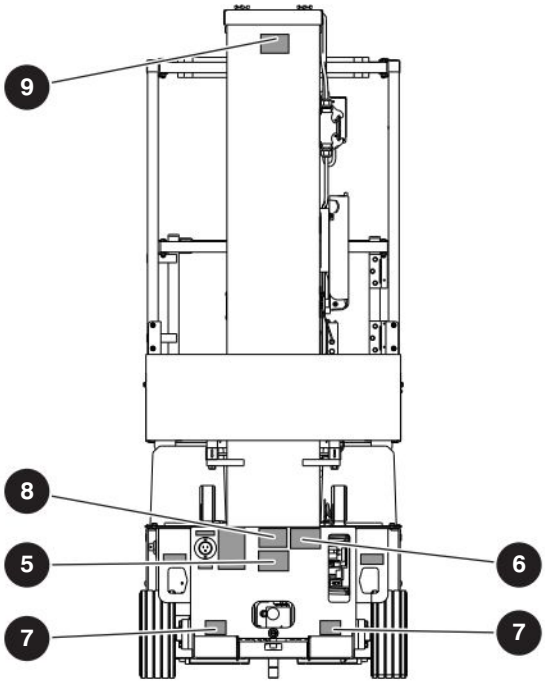

Description	Label Pictorial
5 Emergency-lowering identification	
6 Emergency-lowering procedure Refer to the operation manual. **1.** Push the **emergency-stop** button to on the base control console. **2.** Pull and hold the emergency-lowering valve to fully lower the platform.	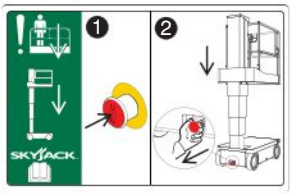
7 Forklift lift location Insert the fork fully into the forklift lift location to lift the MEWP.	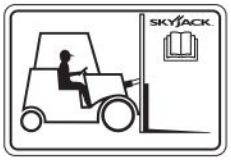
8 Warning - crush hazard	
9 QR code This code gives you fast access to the MEWP documentation, and the live MEWP data supplied by ELEVATE telematics (optional equipment).	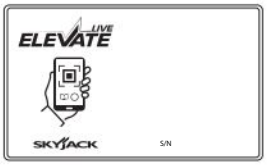

8.1-2 Left view

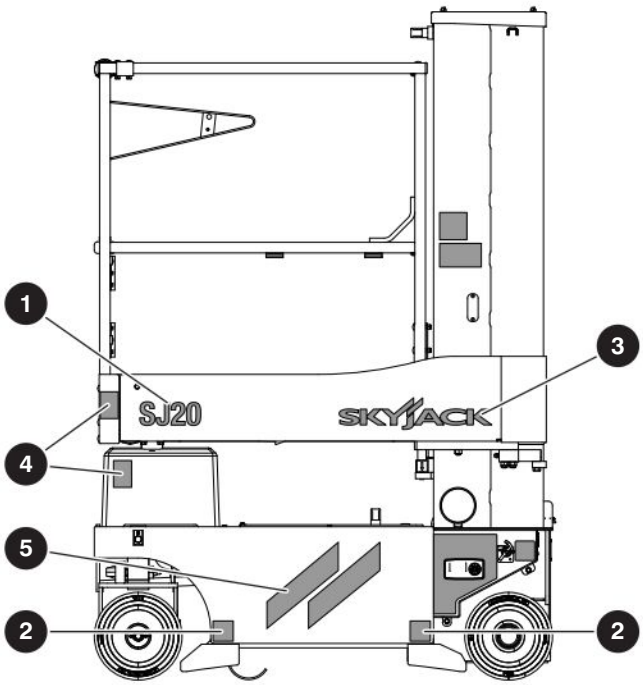

Description	Label Pictorial
1 Model number* Product identifier. **The model number can be different from the one you see.*	SJ20
2 Wheel load* Shows the maximum load applied to the ground by the specified wheel. **Each model has different wheel loads.*	kg (lb)
3 Skyjack logo	SKYJACK
4 Warning - crush hazard	
5 Talon Logo	

Left view (continued)

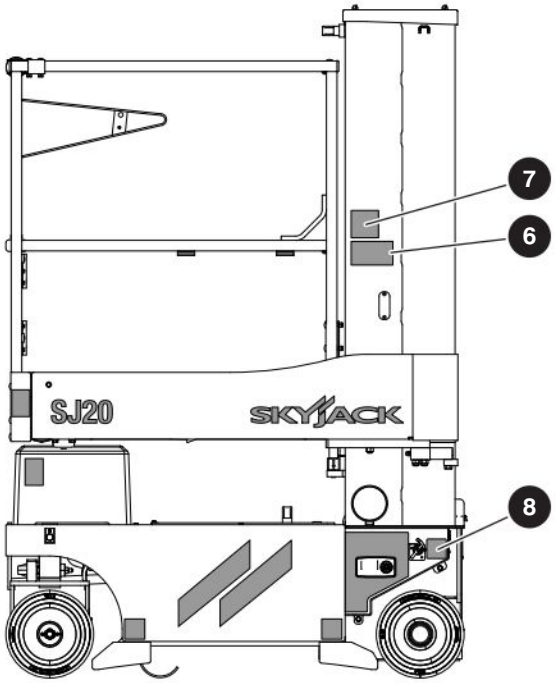

Description	Label Pictorial
6 Annual inspection Make sure the MEWP has received an annual inspection before operation.	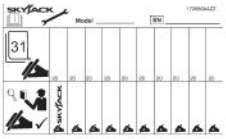
7 Warning - annual inspection Refer to the operation manual. Make sure the annual and daily inspections are done.	
8 Main power disconnect switch Turn the switch clockwise to turn the power on. Turn the switch counterclockwise to turn the power off. Use a padlock to lock the switch in position.	

Left view (continued)

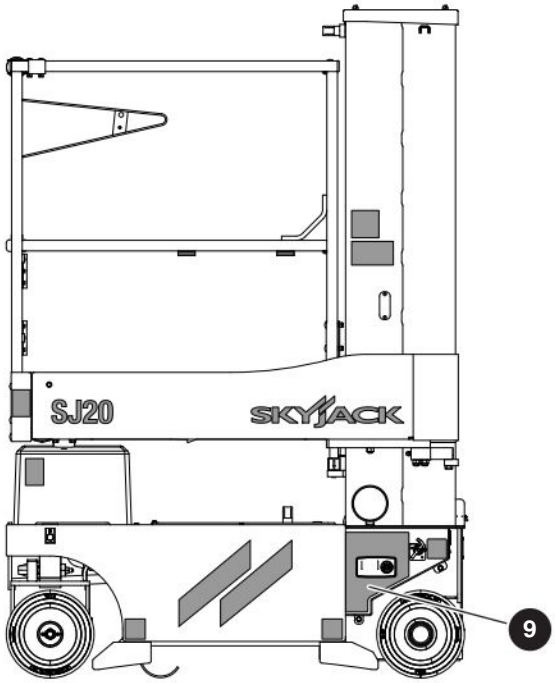

Description	Label Pictorial

9 Base controls

- Turn and hold the **lower**/**neutral**/**raise** switch to lower or raise the platform.
- Select the **off position** to turn off power to the MEWP, the **base position** to energize the base controls, or the **platform position** to energize the platform controls.
- Push the **emergency-stop** button to disconnect power to the control circuit. Pull the **emergency-stop** button to connect the power again.
- Push the **power circuit breaker** to reset the power circuit breaker.

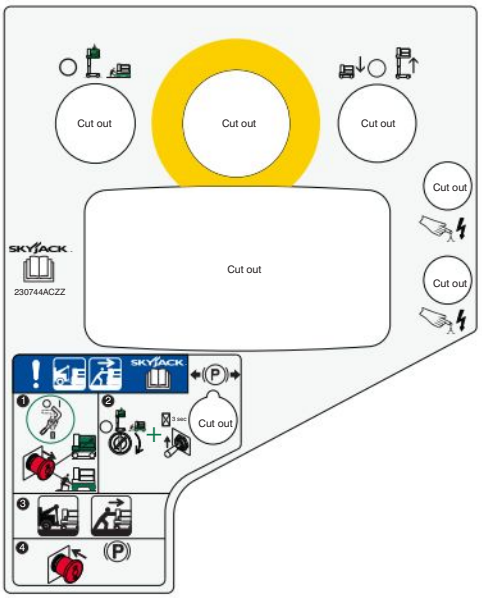

Left view (continued)

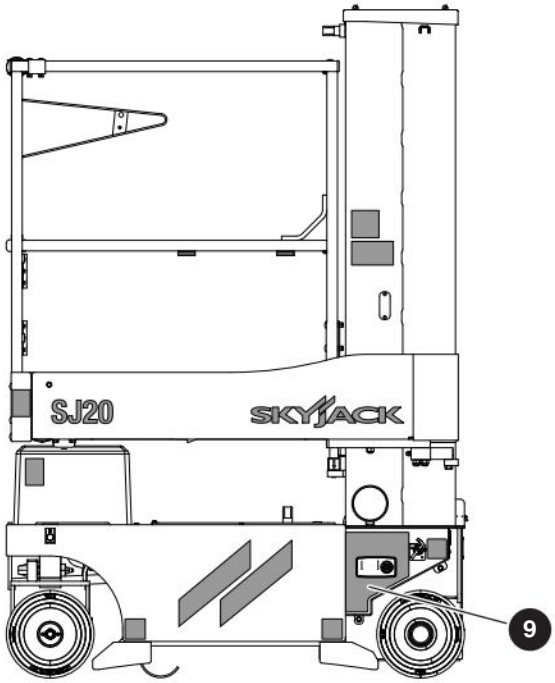

Description	Label Pictorial

9 Base controls

Winch/tow/push procedure

Refer to the operation manual.

1. Release the brakes manually. Refer *to Section 6.2.*
2. Push, winch, or tow the MEWP to the necessary location.
3. Put the MEWP on a firm, level surface.
4. Push the **emergency-stop** button to engage the brakes.

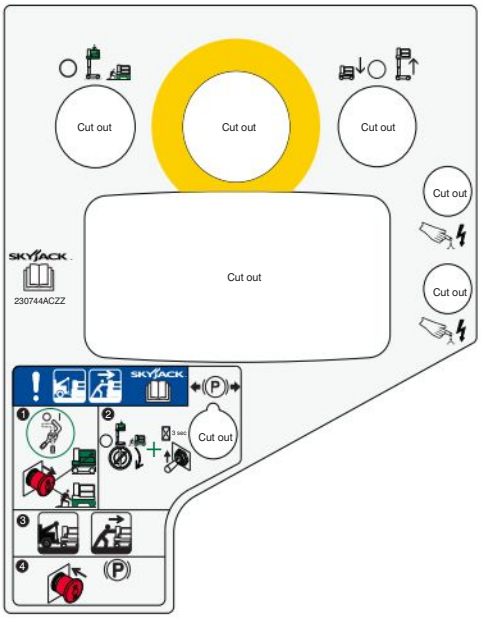

8.1-3 Front view

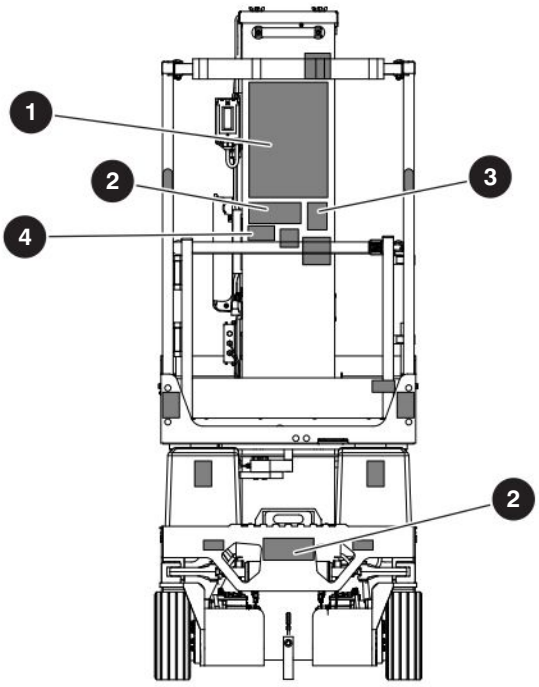

Description	Label Pictorial
1 Hazard identification Read and understand the specified hazards with this MEWP before operation. Refer to *Section 2*. *Note: This label is on the mast assembly.*	
2 Platform capacity* Shows the rated work load in each configuration. **Horizontal load rating**** Do not apply more than the specified side load. Operate the MEWP when the wind speed, which includes wind gusts, is less than the specified speed for this model. ***The rating changes between different units.* *Note: One label is at the base and another is on the mast assembly.*	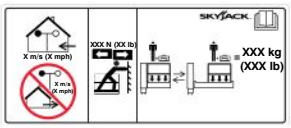
3 Operator daily inspection Refer to the operation manual. Do the visual inspections and function tests before you start each work shift. Refer to *Section 4.4*.	
4 Warning - California proposition 65 Cancer and reproductive harm - https://www.p65warnings.ca.gov/.	

Front view (continued)

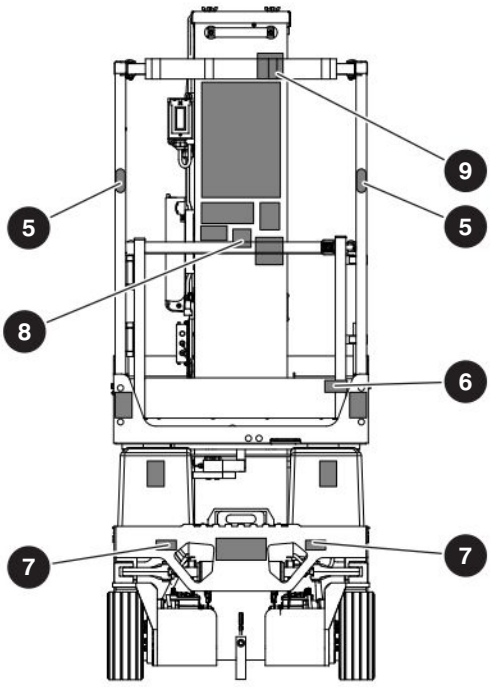

Description	Label Pictorial
5 Fall-protection anchorages When required, attach the body-harness lanyards of each occupant to the fall-protection anchorage points. Rated for one (1) person for each anchorage point. *Note: This label is inside the platform above the fall-protection anchorages.*	
6 Platform traversing procedure Refer to the operation manual. Follow this procedure to traverse the platform.	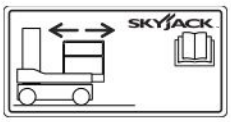
7 Lift and tie-down points Only use these points to lift or tie-down the MEWP.	
8 No jewelry Caution. Do not wear jewelry or loose clothing that could become caught or entangled.	
9 Refer to the service manual. Remove the cover to perform the scheduled maintenance.	

Front view (continued)

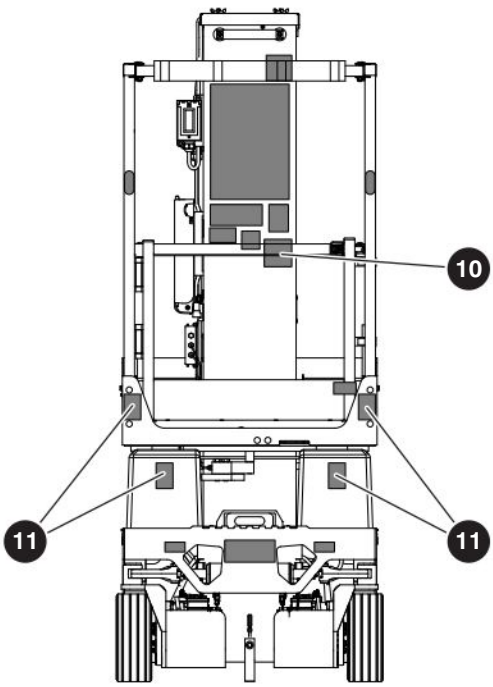

Description	Label Pictorial

10 No insulation

This MEWP is not electrically insulated and does not provide protection from contact with or proximity to energized electrical conductors. Follow *Section 2.1-1* for the minimum distance to keep between all parts of the MEWP, occupants, or tools, and the electrical conductors.



11 Warning - crush hazard



8.1-4 Right view

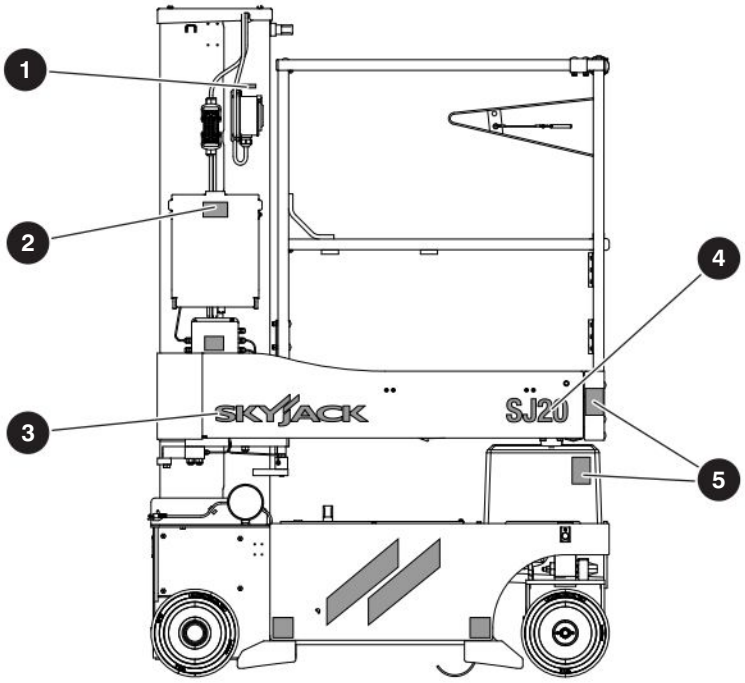

Description	Label Pictorial
1 AC power plug Connect the AC supply here.	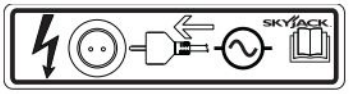
2 Manual storage box Shows the location of the operation manual.	
3 Skyjack logo	
4 Model number* Product identifier. **The model number can be different from the one you see.*	
5 Warning - crush hazard	

Right view (continued)

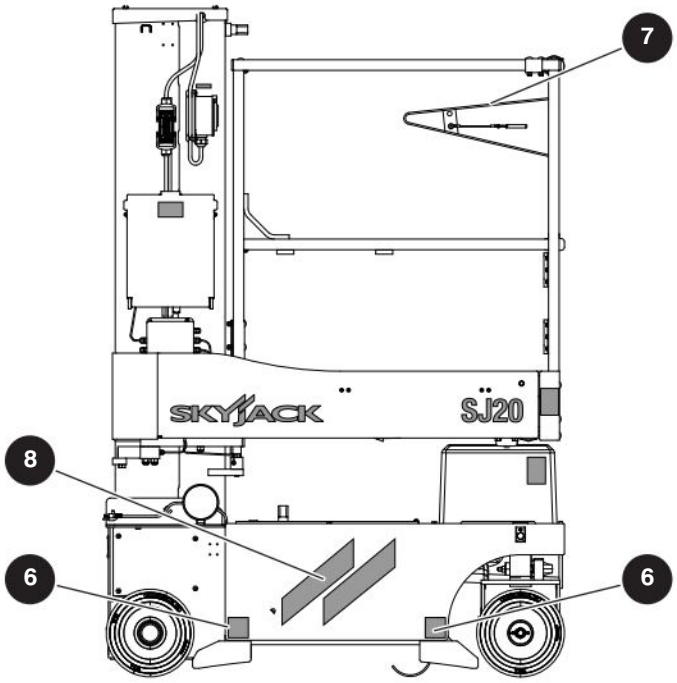

Description	Label Pictorial
6 Wheel load* Shows the maximum load applied to the ground by the specified wheel. **Each model has different wheel loads.*	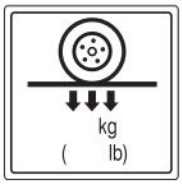
7 Location of the platform control console Shows the location of the platform control console.	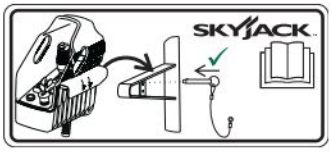
8 Talon Logo	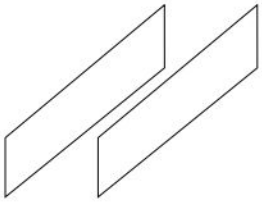

8.1-5 Platform control console

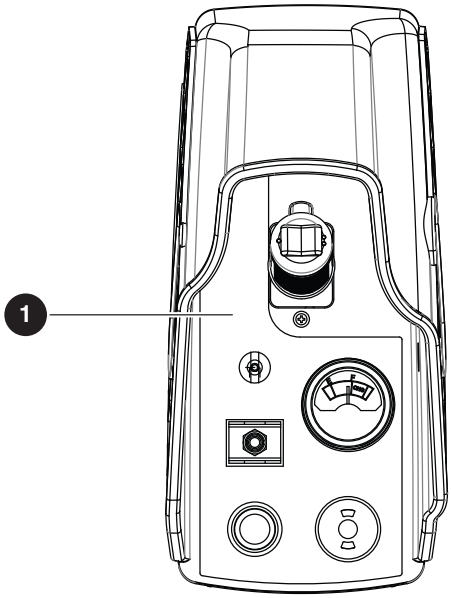

Description	Label Pictorial

1 Platform controls

- Squeeze and hold the **function-enable** switch to energize the lift, drive, and steer functions.
- Operate the **steering rocker** switch to steer.
- Move the **controller handle** to control the lift and drive movements.
- Select the **lift**, **off**, or **drive** mode.
- Push the **horn** button to make a sound like a car horn.
- Push the **emergency-stop** button to disconnect power to the control circuit. Pull the **emergency-stop** button to connect the power again. The operation light goes on to indicate upper control availability.

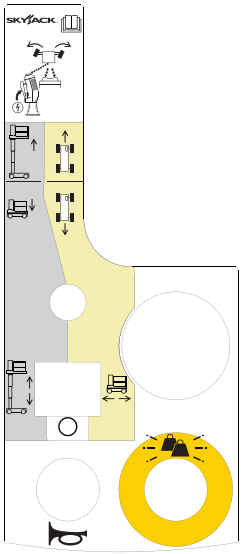

8.1-6 Base view (cover down)

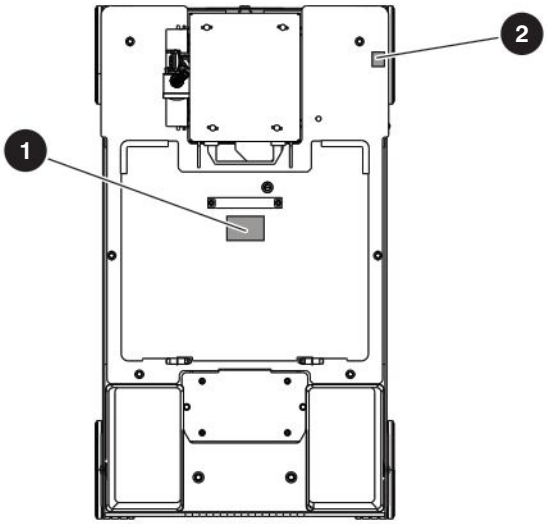

Description	Label Pictorial
1 Warning - do not open Do not access the hydraulic/electrical compartment while the platform is elevated.	
2 Elevate™ Trackunit (optional) This MEWP has added functionality.	

8.1-7 Platform (inside view)

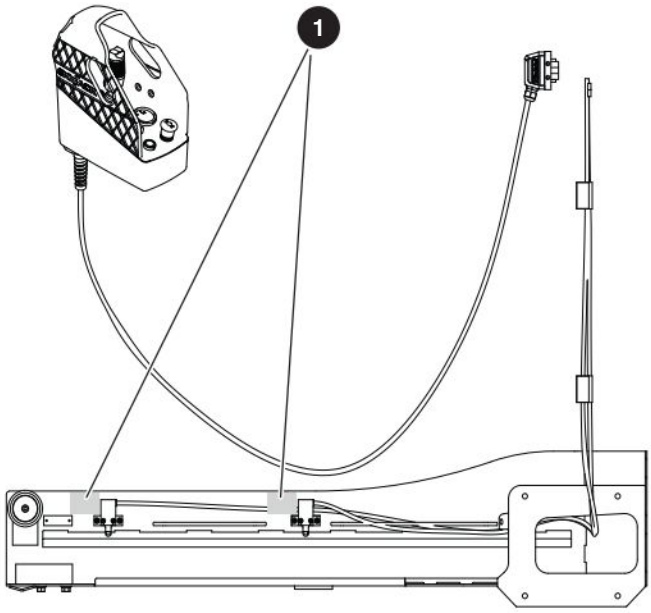

Description	Label Pictorial
1 Do not alter Do not tamper with or disable the limit switches or other safety devices.	

8.1-8 Base view–cover up

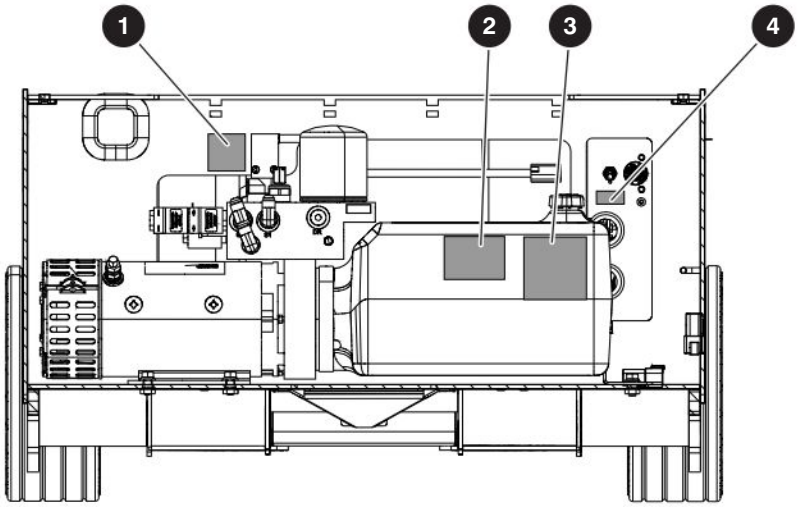

Description	Label Pictorial
1 Do not alter Do not tamper with or disable the limit switches or other safety devices.	
2 Hydraulic oil level Shows the minimum and maximum hydraulic oil level.	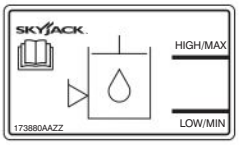
3 Hydraulic Oil ATF Dexron III Only replace the hydraulic fluid with ATF Dexron III.	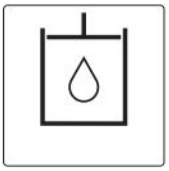
4 Maintenance Switch Refer to the service manual. This switch enables the hydraulic functions for maintenance/servicing.	

8.1-9 Optional equipment

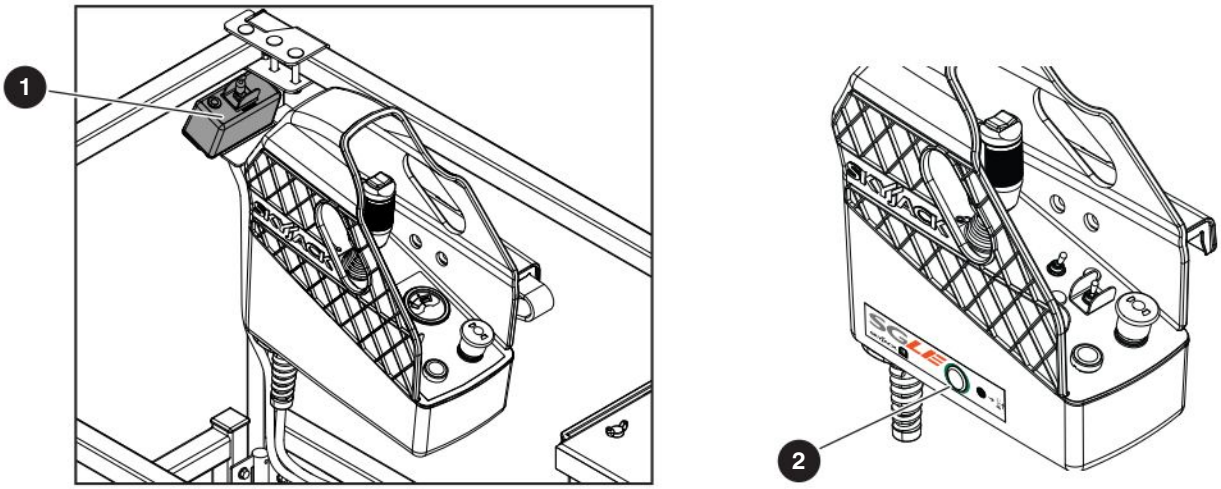

Description	Label Pictorial
❶ **Dual height controls** Lift the **dual height** switch to select the indoor (no wind) or outdoor (wind) mode.	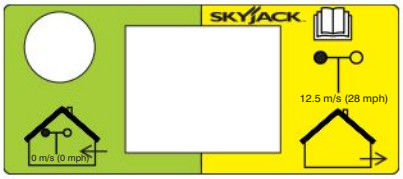
❷ **Secondary Guarding Lift Enable (SGLE) push-button** This push-button energizes the lift function. Hold the button down together with the function-enable switch to enable the raising of the platform with the lift function.	

Optional equipment (continued)

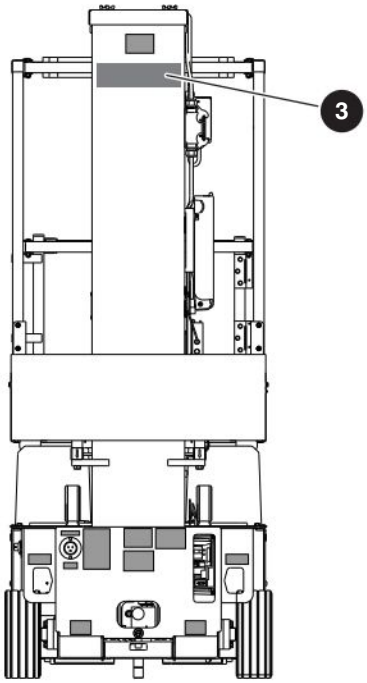

Description	Label Pictorial
3 Ecotray	

Section 9 – Unique Skyjack Features

Your Skyjack MEWP may be equipped with the following unique features:

ACCESSORYZERS™

Having equipment with features and functionality that allow you and your customers to do more is a vital part of the utilization equation. Skyjack offers a range of accessory products to further expand a given product's adaptability and your power to offer a truly flexible rental choice.

Notes


WARNING
Cancer and Reproductive Harm-
https://www.p65warnings.ca.gov/.

SKYJACK™

www.skyjack.com