RAVEN RATO

R212 R300 R420
Engine Owner's Manual

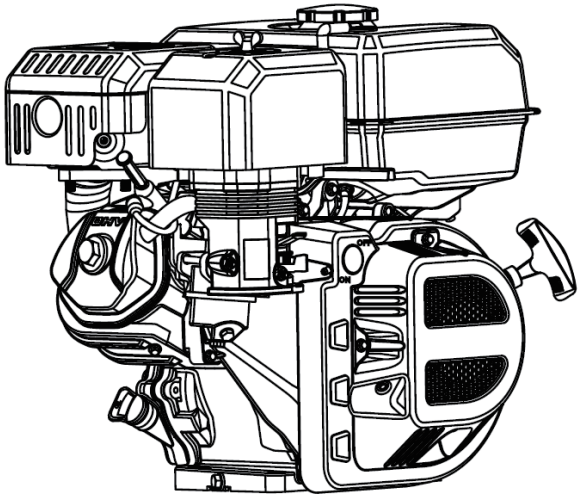

PREFACE

Thank you for choosing our general-purpose gasoline engine.

The manual gives information with respect to operation and maintenance of the 80 100 180-3 210 225 300 390 420 440, general-purpose gasoline engines, and be sure to read it carefully first before operation. Only operate as the manual tells, can insure user's safety and get the best results of the engine operation.

All information and diagrams of this manual are in accordance with the newest products at the publishing time. If revision and other change the information descried in this manual are a little different from the actual status, our company will explain it. Our company reserves the right to make change at any time without notice and without incurring any obligation. No part of this publication may be reproduced without written permission.

This manual should be considered a permanent part of the engine and should remain with the engine if it is resold!

SAFETY MESSAGES

Your safety and the safety of others are very important. We have provided important safety messages in this manual and on the gasoline engine. Please read these messages carefully.

A safety message alerts you to potential hazards that could hurt you or others. Each safety message is preceded by a safety alert symbol . Symbol is as following:

⚠WARNING **You CAN be KILLED or SERIOUSLY HURT if you don't follow instructions.**

⚠CAUTION **You CAN be HURT if you don't follow instructions.**

NOTICE **Your generator or other property could be damaged if you don't follow instructions.**

NOTE **Give you helpful information.**

CONTENTS

PREFACE 1
SAFETY MESSAGES 2
CONTENTS 3
I. SAFETY PRECAUTIONS 4
II. PARTS DESCRIPTION 6
III. BATTERY CONNECTION 9
IV. PRE-OPERATE INSPECTION 11
V. STARTING THE ENGINE 15
VI. RUNNING THE ENGINE 18
VII. STOPPING THE ENGINE 21
VIII. EXHAUST CONTROL SYSTEM..... 22
IX. MAINTENANCE..... 23
X. RANSPORT AND STORAGE 27
XI. TROUBLESHOOTING 29
XII. SPECIFICATIONS 34
XIII. ELECTRIC DIAGRAM 37
XIV. EASY WORN PARTS AND ACCESSORIES LIST 39

I. SAFETY PRECAUTIONS

WARNING **Indicate a possibility of invalid warranty and personal or equipment damage if instructions are not followed.**

Please pay special attention to the following:

1. Strictly set the engine according to the regulated power on the owner's manual. Do not overload, overrun the engine or run it with low load and at low speed in a long time.
2. Use regulated brand of gas and diesel. The fuel should be fully deposited and filtrated before use. Keep clean the fuel filler, change the oil periodically.
3. Periodically check the installation, connection and the degree of tightness of the fixed bolt. Tighten it if necessary.
4. Periodically clean the element of the air cleaner, change it when necessary.
5. The gasoline engine is air-cooled, so clean the radiator, wind cover and fan in time in order to make the engine cool normally.
6. The operator should be familiar with the working principle and structure of the gasoline engine, knowing how to make an emergent stop and the operation of all controlling parts. Any one without training is forbidden to operate the engine. Keep periodical maintenance. Solve problems in time. Do not run the engine in spite of malfunction.
7. Running the engine in a well-ventilated place, keep it at least one meter away from building walls or other equipments, keep away from inflammables such as gasoline, matches and so on to avoid possibility of fire.
8. Refuel in a well-ventilated area with the engine stopped, do not smoke

and do not allow flames or sparks in the refueling area.

9. Do not overfill the fuel tank to avoid fuel's spilling out. If there is spilled fuel around, be sure to clean it thoroughly before starting.
10. The exhaust from the engine may contain poisonous carbon monoxide. To avoid inhalation of CO, never run your engine in a pooly ventilated area.
11. The exhaust muffler is very hot during running the engine even after the engine stops. Never touch it, or you may get burns. Transport or store the engine with it cooling down entirely.
12. Do not allow children to use this engine. Keep children and pets away from the operating area.
13. Safe warning label:
    Please carefully read warning label before operating. Our company will not accept any responsibility for person hurt, or equipment damaged caused by disregarding this warning label.

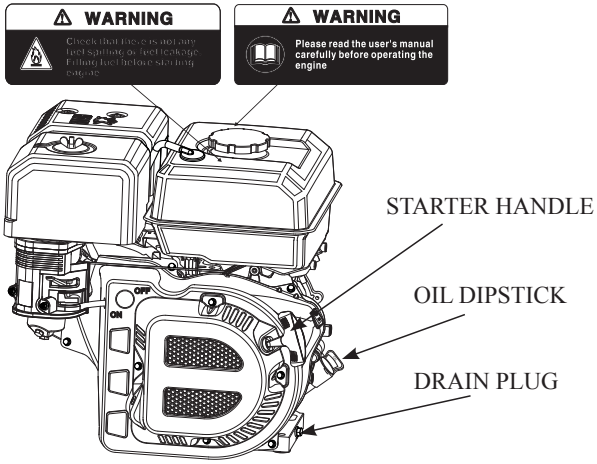

II. PARTS DESCRIPTION

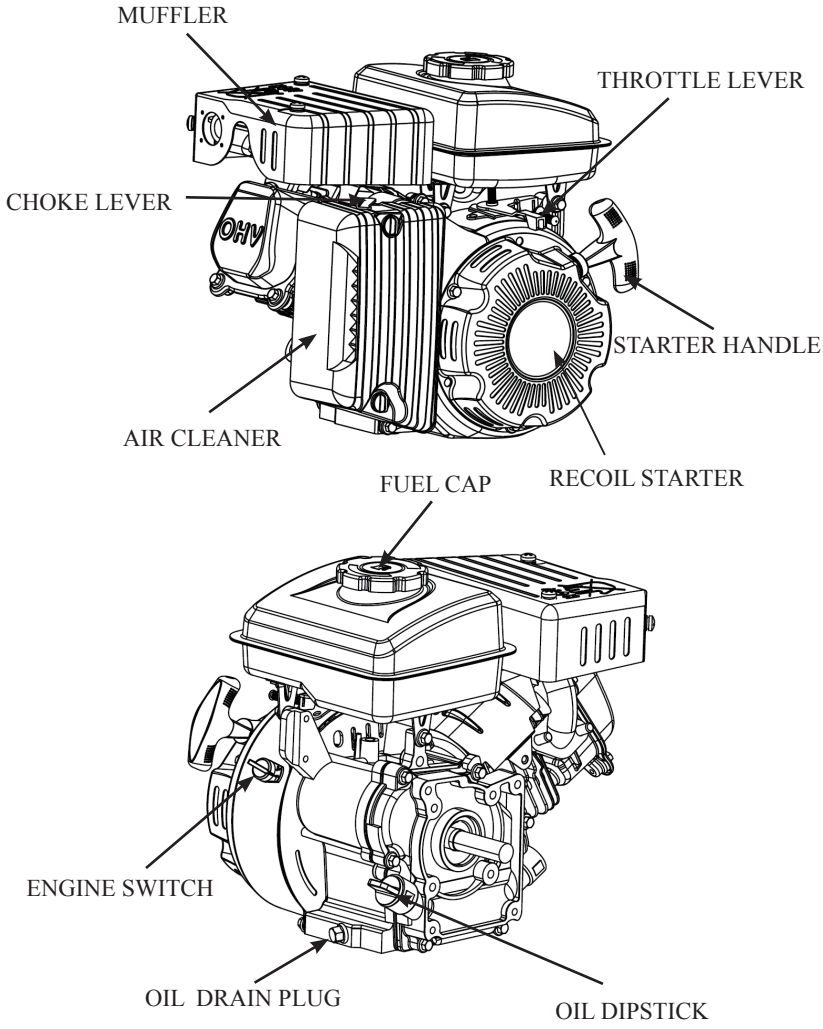

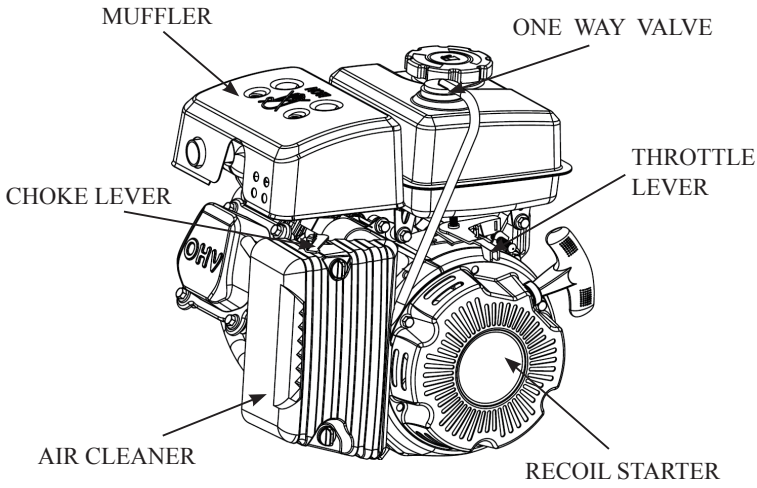
MUFFLER
ONE WAY VALVE
THROTTLE LEVER
CHOKE LEVER
OHV
AIR CLEANER
RECOIL STARTER

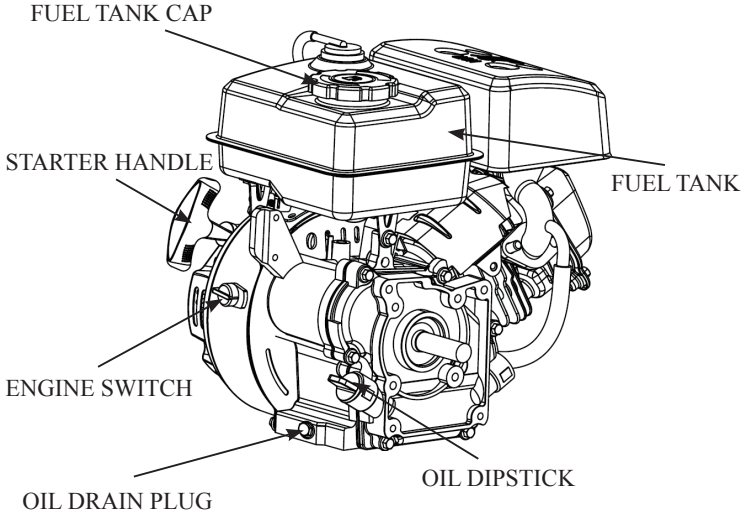
FUEL TANK CAP
STARTER HANDLE
FUEL TANK
ENGINE SWITCH
OIL DIPSTICK
OIL DRAIN PLUG

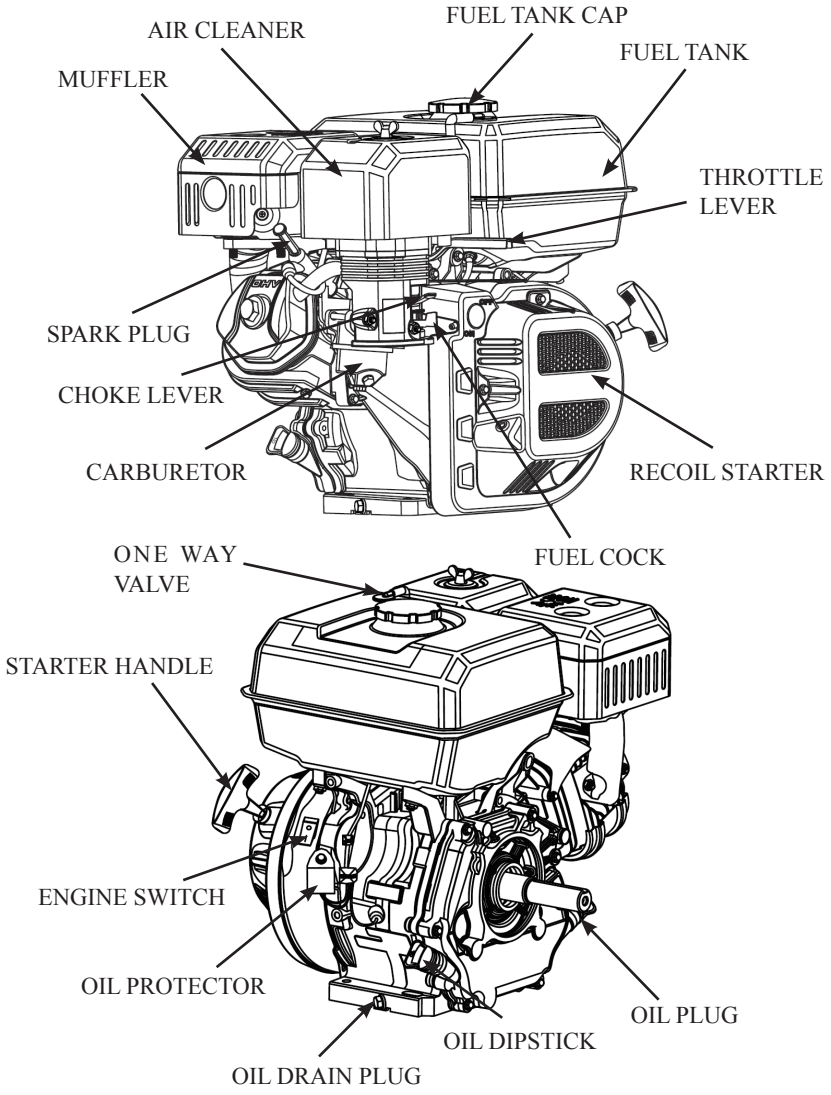
AIR CLEANER
FUEL TANK CAP
FUEL TANK
MUFFLER
THROTTLE LEVER
SPARK PLUG
CHOKE LEVER
CARBURETOR
RECOIL STARTER
FUEL COCK
ONE WAY VALVE
STARTER HANDLE
ENGINE SWITCH
OIL PROTECTOR
OIL PLUG
OIL DIPSTICK
OIL DRAIN PLUG

III. BATTERY CONNECTION

Use 12V and more than 18AH battery, connect its positive lead to start relay terminal while connect its negative lead to engine mounting screw, base screw or other grounding point with the engine.(See the following picture)

Check the battery's connecting point; make sure that it is tight and not rusted. If rusted, clean and connect.

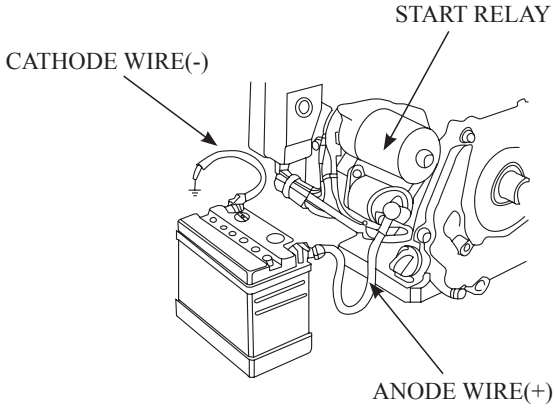

⚠WARNING

1) **The battery may give off explosive gas, keep sparks, flames and cigarettes away. Charge or use it indoors with good ventilation.**
2) **The battery contains sulphuric acid (electrolyte). If contact with skin or eyes may cause severe burns. If electrolyte gets in your skin, flush with water; if gets in your eyes, flush with water for at least 15 minutes and call a physician at once.**
3) **Electrolyte is poisonous. If swallowed, drink large quantities of**

water or milk, and follow with milk of magnesia or vegetable oil and call a physician.

4) Keep out of reach of children.

NOTICE

1) Do not add tap water to the battery instead of distilled water, otherwise the battery service life will be shortened.

2) Do not add distilled water over the electrolyte upper level mark, if not, electrolyte will spill out and corrupt the engine part. If so, be sure to wash them away with water.

3) Make sure not to connect the battery leads in reverse order, otherwise short-circuit or breaker's trip may be result in.

IV. PRE-OPERATE INSPECTION

1. ENGINE OIL

⚠CAUTION

Use 4-stroke engine oil, API service classification SF class or equivalent. Check the API service label on the oil container to be sure it includes the letters SF class or equivalent .

SF 10W-30 is recommended for general use. Other viscosities shown in the chart may be used when the average temperature in your area is within the indicated range.

SAE VISCOSITY GARADES

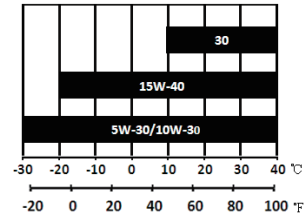

ENVIRONMENT TEMPERATURE

Oil level check

Check method:

1) Remove the dipstick and clean it.
2) Reinsert the dipstick into the oil filling hole without screwing it, and check oil level.
3) If the oil level is too low, add the recommended engine oil up to the oil filling neck.
4) Reinstall the dipstick.
5) Lubrication oil capacity: 80 100 0.35L
   180-3 210 225 0.5L
   300 390 420 440 1L

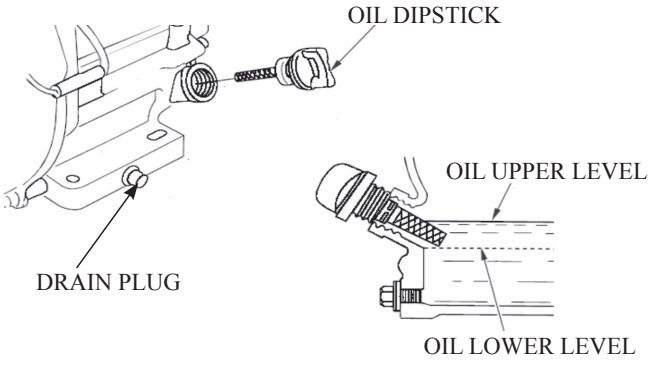

NOTICE

Run with insufficient engine oil may damage the gasoline engine severely and that is not within valid warranty.

2. AIR CLEANER

Dismantle the air cleaner cover and check its element to make sure it clean and complete. Clean or replace it as necessary(see page 25: maintenance of air cleaner).

NOTICE

Never run the engine without an air cleaner, or severe wear of the engine may be resulted in. That is not within the valid warranty.

3. CHECK THE OIL

1) Remove the fuel tank cap and check fuel level.
2) If the level is too low, refuel the tank. Remember adding fuel not

over the fuel filler shoulder.

⚠WARNING

1) Gasoline is extremely flammable and is explosive under certain conditions.

2) Refueling in a well-ventilation area with the engine stopped. Do not smoke and do not allow flames or sparks in the area where gasoline is stored or where the fuel tank is refueled.

3) Do not overfill the fuel tank (there should be no fuel in the filling neck). After refueling, make sure the fuel tank cap is set back securely.

4) Be careful not to spill fuel when refueling. Spilled fuel or fuel vapor may ignite. If any fuel is spilled, make sure the area is dry before starting the engine.

5) Avoid repeated or prolonged contact with skin or breathing of fuel vapor. Keep out of reach of children.

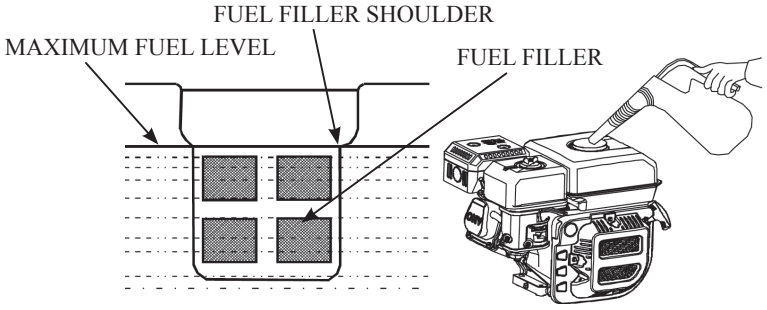

Fuel tank capacity:	80/100	180-3/210/225	300	390/420/440
	2L	3.6L	5.4L	6.5L

NOTICE

Fuel may damage the oil paint and plastic. Be careful not to spill fuel when refueling. Any damage due to oil spilling is not within valid warranty.

"Light knocking" or "spark exploding" sound can be hear when the engine overloading. It is normal. Do not be worry about that.

If " knocking" or "spark exploding" sound occur at a steady speed under normal load, change brand of gasoline; if such phenomena still happen, consult your dealer for help, otherwise the engine may be damaged.

NOTICE

When the engine is running, continuously "Knocking" or "spark exploding" sound occurring will damage engine.

"Knocking" or "spark exploding" sound from misusing will not be within the valid warranty.

V. STARTING THE ENGINE

1. Turn the fuel cock to the “ON” position.

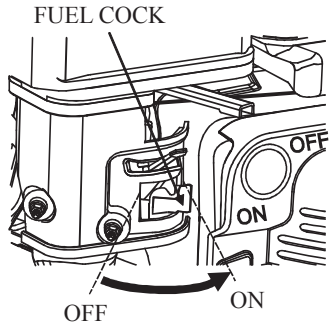

2. Turn the choke lever to the "START" position.

If the gasoline engine is hot, turn the choke lever to the "RUN"position.

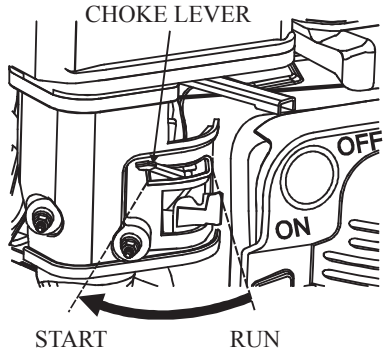

3. Move governor lever to left a little.

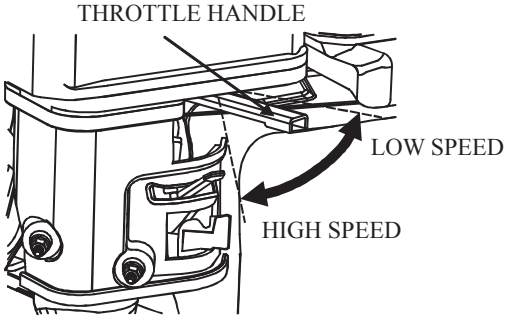

4. Start the engine

1) Recoil starter:

Turn the engine switch to the "ON" (OPEN) position.

Pull the starter grip lightly until resistance is felt, then briskly.

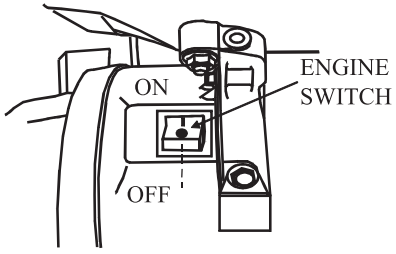

NOTICE

Don't allow the starter grip to snap back against the engine. Return it gently to prevent damage to the starter

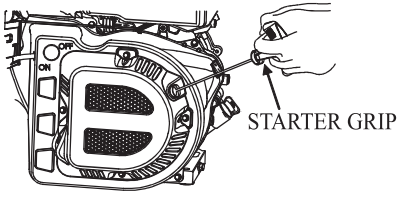

2) Electric start

Turn the engine switch to the "START" position, and hold it there until the gasoline engine starts. When the engine starts, allow the engine switch to return to the "ON" position.

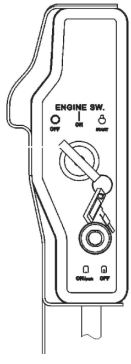

ENGINE SWITCH

NOTICE

Do not use the starter for more than 5 seconds or starter motor damage may occur. If the engine fails to start, release the switch and wait 10 seconds before operating the starter again.

VI. RUNNING THE ENGINE

1. Preheat the engine and push back the choke lever to the "RUN" position.

CHOKE LEVER

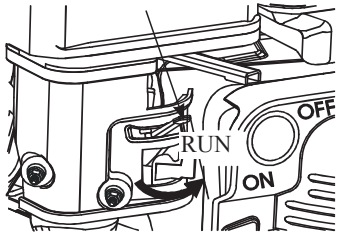

2. Move the throttle lever to proper position to make the gasoline engine run at required velocity.

THROTTLE LEVER

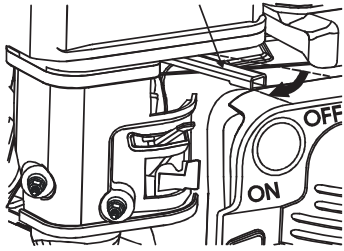

ENGINE OIL ALARM

The engine oil alarm is specially designed to protect engine when the engine oil in the crankcase is insufficient. Once the engine oil level gets lower than the limit line, the alarm system will stall the engine automatically while the engine switch is still at ON position.

NOTICE

If cannot restart the engine, check the engine oil level first before go to other check items.

BREAKER (Electric-start type)

The breaker will cut off automatically to protect the charging circuit of the battery in the case that short circuit or incorrect connection of the battery poles occurs.

The green indicator in the breaker will jump out with the circuit cutting off. After finding troubles and troubleshooting, depress the breaker button to turn the breaker on.

KIT HIGH ALTITUDE REPLACEMENT FOR EPAIII ENGINES

3000ft to 6000ft or 6000ft to 8000ft of elevation

* At high altitude, the standard carburetor air-fuel mixture will be too rich. Performance will decrease and fuel consumption will increase. A very rich mixture will also foul the spark plug and cause hard starting. Operation at an altitude that differs from that at which this engine was certified, for extended periods of time, may increase emissions.

* The fuel system on this Engine or Equipment may be influenced by operation at higher altitudes. Proper operation can be ensured by installing an altitude kit when required. See the table below to determine when an altitude kit is required. Operating this generator without the proper altitude kit installed may increase the engine's emissions and decrease fuel economy and performance. Kits may be obtained from any Dealer, and should be installed by a qualified individual.

Fuel	Altitude Range**	Kit Part Number
Gasoline	0 – 3000 ft	Not Required
	3000 – 6000 ft	Altitude kit 1#
	6000 – 8000 ft	Altitude kit 2#
* Engine, Generator Set, Pressure Washer, Walk-Behind Lawnmower, Compressor, Pump, Tiller etc. ** Elevation above sea level.		

* This high altitude jet is to be used at elevations above 3000 feet.

* At elevations above 8000 feet, the engine may experience decreased performance, even with the high altitude kit.

If a carburetor is replaced, the proper high altitude kit jet will need to be installed into the replacement carburetor.



WARNING! To prevent serious injury from fire: Follow the kit procedures in a well-ventilated area away from ignition sources. If the engine is hot from use, shut the engine off and wait for it to cool before proceeding.

NOTICE: The warranty may be void if necessary adjustments are not made for high altitude use. To install a high altitude kit.

VII. STOPPING THE ENGINE

In emergency, push the engine switch to the OFF".

In normal, please do as following:

1. Push right the throttle lever to low speed position.

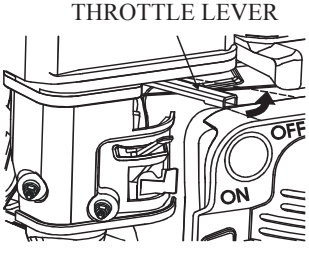

2. Push the engine switch to the "OFF" position.

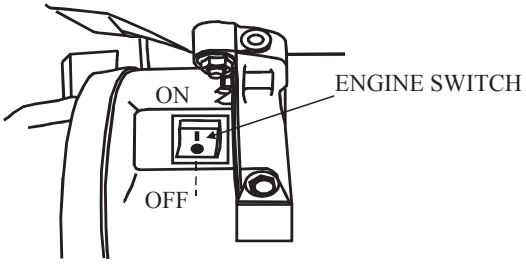

3. Set the fuel cock to "OFF" position.

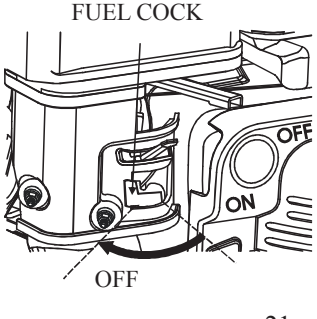

NOTICE

Sudden stopping at high speed under heavy load is forbidden, otherwise damage will result.

VIII. EXHAUST CONTROL SYSTEM

With the engine running, carbon monoxide, oxide of nitrogen and hydrocarbon will produce, and in certain conditions, oxide of nitrogen and hydrocarbon will react chemically each other to make smoke while carbon monoxide is toxic, so exhaust control of them is very important.
To keep the exhaust of your engine with in the standard exhaust emission, pay attention to the following:

1. Maintenance

Maintain the engine periodically in accordance with the maintenance schedule in the manual. The maintenance schedule is made out on the base of normal use in normal conditions, if using under heavy load, dusty or wet circumstances or in high temperature, service of the engine should be done more often.

2. Problems affecting exhaust emissions

1) Difficult starting or difficult stopping.
2) Unstable idling speed.
3) Give off black smoke or consume fuel too much
4) Poor ignition sparks or fire back.
5) Too early ignition.

Once you find any of above problems, contact your dealer for help.

IX. MAINTENANCE

The engine must be properly maintained to ensure its operation be safe, economy and trouble-free, as well as eco-friendly.
In order to keep your gasoline engine in good working condition, it must be periodically serviced. The following maintenance schedule and routine inspection procedures must be carefully followed

Items \ Frequency		Each time	First 1 month or first 20hrs of operation	Thereafter, every 3 months or every 50hrs of operation	Every year or every 100 hrs of operation
Engine oil	Check- Refill	√			
	Replace		√	√	
Reduction gear oil(if equipped)	Oil level check	√			
	Replace		√	√	
Air filter element	Check	√			
	Clean		√		
	Replace			√	
Deposit Cup(if equipped)	Clean				√
Spark Plug	Check - adjust				√*
Spark arrester	Clean			√	
Idling (if equipped)**	Check - adjust				√
Valve clearance **	Check-adjust				√
Fuel tank & fuel filter **	Clean				√
Fuel line	Check	Every 2 years(change if necessary)			
Cylinder head, piston	Clean up carbon **	< 225cc, Every 125hrs ≥225cc, Every 250hrs			

* These items should be replaced if replacement needed.
** These items should be maintained and repaired by our authorized dealer, unless the owner has appropriate tools and is proficient with mechanical maintenance.

NOTICE

- If the gasoline engine frequently work under high temperature or heavy load, change the oil every 25 hours.
- If the engine frequently work under dusty or other severe circumstances, clean the air filter element every 10 hours; If necessary, change the air filter element every 25 hours.
- The maintenance period and the exact time (hour), the one which comes first should govern.

● If you have missed the scheduled time to maintain your engine, do it as soon as possible.

⚠WARNING

Stop the engine before servicing. Put the engine on a level surface and remove the spark plug cap to prevent the engine from starting. Never run your engine in a poorly ventilated room or other enclosed area, be sure to keep good ventilation in working area. The exhaust from the engine may contain poisonous CO, inhalation can cause shock, unconsciousness and even death.

2. MAINTENANCE METHOD

1) Replacement of engine oil (see page 11 to check method)
   Drain the engine oil rapidly and completely out when the engine is hot.

(1) Turn off the oil filler cap and drain plug to drain engine oil thoroughly.
   Reinstall the drain plug and screw in securely.

(2) Fill the specified engine oil up to the upper level mark.

(3) Reinstall the oil filler cap.

NOTICE

Do not dump oil containers or discarded engine oil into rubbish boxes or onto the ground. For the sake of environmental protection, we suggest you take in discarded engine oil with a closed container and bring to local recycling station.

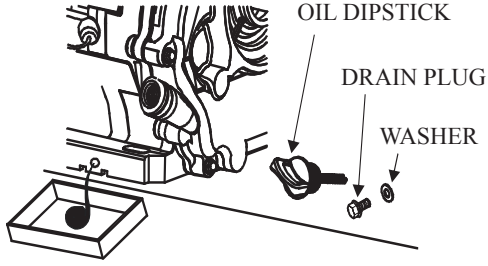

2) Maintenance of air cleaner

A dirty air cleaner can restrict air flowing into the carburetor. To keep the carburetor in good working conditions, please service the air cleaner periodically(clean air cleaner element after engine running 20h).If operating the engine in extremely dusty area, the job should be done more often.

⚠WARNING

Never clean the air cleaner element with gasoline or low flash-point detergents, or explosion may happen.

NOTICE

Never run the engine without an air cleaner, because air with dirt and dust entering the engine can speed up the engine wear.

(1) Remove the air cleaner cover off and take the element out.

(2) Paper element: Wash the element with home detergents and warm water (or non-flammable or high flash-point cleansing solvents) and dry up.

Foam element: Soak in clean engine oil until saturated. Squeeze out excess oil, otherwise, the engine will smoke in starting stage.

(3) Clean the air cleaner cover and inner surface with wet cloth, be careful not to allow the dust entering into the carburetor.

(4) Reinstall the element and put the air cleaner cover on.

3) Spark plug

Spark plug type: BPR6ES (NGK) or NHSP LD F7RTC

In order to ensure the engine normal running, gap of the spark plug must be correct and no deposit around the spark plug.

(1) Remove the spark plug cap.

(2) Clear away dirt around the spark plug base.

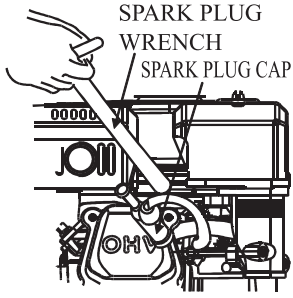

(3) Dismantle the spark plug with a spark plug wrench.

(4) Visually check the spark plug. Clean with a steel brush. If the insulator is damaged, replace the spark plug instead.

(5) Measure the spark plug clearance with a feeler. The clearance should be 0.7~0.8mm. If adjustment is necessary, bend the side electrode carefully.

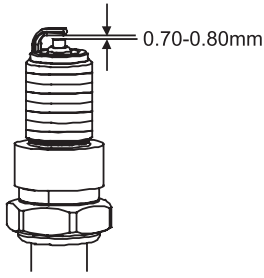

(6) Check if the spark plug gasket is in good conditions. In order to screw thread misplace, screw in by hand.

(7) Screw on the spark plug to the bottom first by hand and then screw in by a spark plug wrench and compress the gasket.

-- If a new spark plug is used, more twist 1/2 turns after compressing the gasket.

-- If reinstalling the used spark plug, just more twist 1/8-1/4 turns.

⚠WARNING

Don't touch the muffler in running and just gasoline engine stopping stage to avoid burn.

NOTICE

The spark plug must be tightened securely, or it may become very hot to damage the engine.

X. RANSPORT AND STORAGE

Transport with the fuel cock turned the “OFF” position. Transport or store the engine when it is cool so as to avoid getting burns or fire.

NOTICE

Do not incline the engine so as to avoid fuel’s spill. Spilled fuel or fuel vapor may ignite to cause fire.

If the engine is not kept in use for a long time, be sure to store it properly.

1. Make sure the storage area is dry and free of dust.
2. Turn the fuel cock to “OFF” position, set a proper container under the carburetor (as shown on the fig).
3. Open the fuel cock to completely train gasoline out of the fuel tank.
4. Reinstall the oil drain plug back and tighten it.

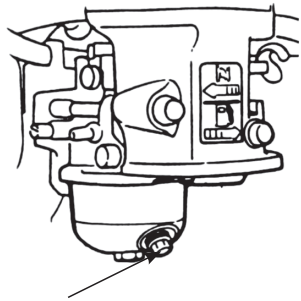

CARBURETOR OIL DRAIN PLUG

WARNING

Fuel is extremely flammable and explosive under certain conditions. Keep smoke, fire and spark away from operating site.

5. Drain the oil out of the gasoline engine.
6. Remove the spark plug. Fill about a spoon of fresh engine oil onto the cylinder. Crank the engine up to distribute engine oil evenly. Reinstall the spark plug.
7. Electric starter: Remove the battery and store in dry and cool area. Charge one every month.
8. Cover the engine to protect dust entering.

Please maintain according to following table when reuse after storing.

Storing time	Maintaining procedure is commended in order to prevent starting difficult.
1 month	Don’t need to prepare.
1-2 month	Drain the used gasoline out and add the fresh gasoline
2 months to 1 year	Drain the used gasoline out and add the fresh gasoline Drain the gasoline ① out of the carburetor cup. Drain the gasoline ② out of the sediment bowl.
1 year over	Drain the used gasoline out and add the fresh gasoline Drain the gasoline ① out of the carburetor cup. Drain the gasoline ② out of the sediment bowl. After removing out of the storage, first, drain the used gasoline to proper container, and don’t start before adding fresh gasoline.
Loosen the oil drain bolt and completely drain the gasoline out of the carburetor to proper container and screw the oil drain bolt down. Remove the sediment bowl after closing fuel cock, and completely pour the gasoline out the sediment bowl. Finally reinstall the sediment bowl back and screw it down.	

XI. TROUBLESHOOTING

1. START ENGINE DIFFICULTLY (By using recoil starter):

TROUBLE			CAUSE		REMEDY
Normal cylinder compression	Normal spark plug spark	Something wrong with the fuel system.	Fuel supply is not smooth or no fuel supply.	There is no enough fuel in fuel tank and fuel cock is closed.	Fill fuel, open fuel cock.
				Air vent in the fuel filler cap is clogged	Dredge air vent.
				Fuel cock is clogged	Clean first and then dredge
				Improper or clogged main oil flow hole.	Readjust or clean, blow to get through.
				Needle valve is not closed properly or start hole is clogged.	Dismantle needle valve and repair, clean, blow to get through.
				Float is damaged or sticking.	Repair float
			Fuel supply is normal.	Fuel is too filthy or deteriorated	Replace
				There is water in fuel.	Replace
				Too much fuel in engine	Drain extra fuel, dry up spark plug electrodes.
				Wrong fuel brand	Select proper fuel brand corresponding with the requirements.
	Normal fuel supply system.	Normal high –tension line spark.	Normal high-tension line spark	Too much carbon deposit and dirt around electrodes.	Clear away.
				Electrodes are burn damaged seriously or insulators damaged.	Replace spark plug.
				Improper electrodes gap.	Adjust to proper value.
		High-tension line no spark	Normal spark plug	High–tension line is damaged.	Replace
				Ignition coil is damaged.	Replace
				Magneto loses magnetism.	Replace
				Abnormal gap between ignition coil and flywheel.	Adjust gap

TROUBLE			CAUSE	REMEDY
Abnormal cylinder compression.	Normal fuel supply system.	Normal spark plug.	Piston ring is worn to or even over its wear limit	Replace
			Piston ring is broken.	Replace
			Piston ring is sticking.	Clear up carbon fouling.
			Spark plug is not installed tighten or without a gasket.	Tighten with a gasket in.
			Air leakage between cylinder block and cylinder head.	Check cylinder gasket, and the flatness of the surface by which cylinder block contacting with cylinder head
				Tighten cylinder head bolts in stipulated order to stipulated torque.
			Air leakage in the valves	Check valve. Clearance and tightness, repair if necessary.

If still can't starting, have the gasoline engine to our authorized dealer for repairing.

⚠WARNING

- **When testing the spark plug, never hold the high- voltage wire of the spark plug with wet hand.**
- **Make sure there is no spilled fuel outside the engine and that the spark plug isn't dipped with fuel.**
- **To prevent fire, keep sparks far away from the spark plug mounting hole.**

START ENGINE DIFFICULTLY (By using starting motor):

ITMES	CAUSE	REMEDY
Check battery connection	Incorrect connection	Correct
Check battery	No charge or under charge, corrosion	Check the breaker, charge up the battery or replace it.

2. GASOLING ENGINE POWER OUTPUT INSUFFICIENCY:

TROUBLE	CAUSE		REMEDY
When increasing throttle, speed increase slow or even decrease and stop running	Fuel supply system	Air in fuel line or fuel line clogged	Exhaust air or dredge fuel line
		Main oil flow hole is not adjusted properly	Readjust
		In carburetor, needle valve hole and main oil flow hole clogged.	Clean and blow to get through
		Fuel cock is clogged up.	Clean, replace damaged part
		Too much carbon deposit in combusting chamber.	Clear away
		Too much car bon fouling in muffler and exhaust pipe.	Clear away
		Air cleaner is clogged up.	Clean air cleaner filter element
		Intake pipe is leaking	Repair or replace
	Poor compression	Piston or cylinder or piston ring is worn	Replace the worn
		Air leakage from the surface by which cylinder block contacting with cylinder head.	Replace cylinder gasket
		Too big or too small valve clearance.	Readjust
		Valve tightness is poor.	Repair

3. GASOLINE ENGINE RUNNING UNSMOOTHLY:

TROUBLE	CAUSE	REMEDY
Knocking sound	Piston, cylinder or piston ring is worn excessively.	Replace the worn
	Piston pin and piston pin hole are worn excessively.	Replace piston or piston pin
	Tie rod small head is worn excessively.	Replace tie rod
	Roller bearing for crankshaft main shaft is worn.	Replace roller bearing
Abnormal combustion	Engine is too hot	Shoot trouble
	Too much carbon deposit in combustion chamber	Clear away
	Improper gasoline brand or low gasoline quality	Replace with qualified gasoline
Spark lacking	There is water in float chamber	Clean
	improper spark plug electrodes clearance	Adjust
	Something wrong with induced coil, and so on	Check and replace damaged parts

4. STOP SUDDENLY WHEN RUNNING:

TROUBLE	CAUSE		REMEDY
Stop suddenly when running.	Fuel supply system	Fuel is finished	Refill fuel
		Carburetor is clogged	Check fuel line and dredge
		Float is leaking	Repair
		Needle valve is sticked	Dismantle float chamber and eliminate it
	Ignition system	Spark plug is punctured, or short-circuited by carbon deposit	Replace spark plug
		Side electrode of spark plug is dropped out	Replace spark plug
		High-tension wire is dropped out	Weld on
		Ignition coil is punctured or short-circuited	Replace ignition coil
		Parking wire is located on engine body	Find out meeting and insulate
	The other	Cylinder is seriously scored and valve dropped out	Repair or replace damaged parts

5. GASOLINE ENGINE IS OVERHEAT

TROUBLE	CAUSE	REMEDY
Gasoline Engine Is Overheat.	Oil insufficient	Refill engine oil enough
	Exhaust pipe blocked up	Clean exhaust pipe
	Shroud leaking	Repair damaged part
	Cooling fins blocked by foreign matter	Clear cooling fins
	Cooling fan loosen and misfunction	Reinstall well
	Connection rod deformation to make piston and cylinder bushing side wear	Replace connection rod
	Cylinder or piston or piston ring is worn to make hunting between cylinder and crankcase	Replace the worn parts
	Improper adjustment of engine governor to produce speed high.	Readjust engine governor
	Crankshaft main bearing burnt out	Replace main bearing

6. THERE EXISTS ABNORMAL NOISE WHEN ENGINE RUNNING

TROUBLE	CAUSE	REMEDY
Beating sound	Piston, piston ring or cylinder is worn	Replace the worn part
	Connection rod or piston pin and piston pin hole are worn	Replace the worn part
	Crankshaft main neck is worn	Replace bearing
	Piston ring is broken	Replace piston ring
Metal beating sound when abnormal combustion occurs	Too much carbon deposit in combusting chamber	Clear away carbon deposit
	Too small electrode clearance of spark plug	Adjust electrode clearance properly
	Engine fuel is too much	Check relative parts such as carburetor
	Improper fuel brand	Replace fuel
	Engine is overheat	Find a cause and eliminate it
The other	Improper valve clearance	Readjust valve clearance properly
	Fly wheel is not connected with crankshaft tightly	Connect tightly

XII. SPECIFICATIONS

1. 80 100 180-3 210 225

1) MAIN SPECIFICATION

Specification \ Model	80	100	180-3	210	225
L×W×H	310×290×300mm		390×320×345mm 455×320×345mm(ELECTRIC START)		
Dry Weight	10kg		16kg/18.4kg(ELECTRIC START)		
Gasoline Engine Type	4-Stroke, OHV, Single Cylinder				
Displacement	78.5ml	98.5ml	179ml	212ml	223ml
Compression Ratio	8.5:1	8.3:1	8.5:1	9.0:1 8.5:1(equiped with catalyst)	8.4:1
Bore × Stroke	52×37mm	56×40mm	65×54mm	70×55mm	70×58mm
Maximum Output Power	1.4kW/3600r/min	1.8kW/3,600r/min	3.5kW/3,600r/min 3.4kW/3600r/min (equiped with catalyst)	4.1kW/3,600r/min	4.3kW/3,600r/min
Maximum Torque	3.6N•m/2,500r/min	4.7N·m /2,500r/min	9.5N·m /2,500r/min	12N·m /2,500r/min	13N·m /2,500r/min
Cooling System	Forced Air-cooled				
Ignition System	Transistorized Magneto Ignition (TCI)				
Spark Plug	E5TC	E7TC	BP6ES(NGK)/F6RTC(NHSP)/F6TC/F7RTC/F7TC		
Lubrication System	Forced Splash				
PTO Shaft Rotation	Counterclockwise				

DATA ADJUSTMENT:

Items	Technical Data
Spark Plug Clearance	0.7- 0.8mm
Valve Clearance (Cold Engine)	Intake: 0.10-0.15mm Exhaust: 0.15-0.20mm

2) TORQUE OF IMPORTANT BOLTS

Items	80/100			180-3/210/225		
	Specifications	Torque Valve		Specifications	Torque Valve	
		N · m	Kg · m		N · m	Kg · m
Connection-Rod Bolt	M6×25	12	1.2	M6×1.25(special)	13	1.3
Cylinder Head Bolt	M8×55	32	3.2	M10×1.25	35	3.5
Flywheel Nut	M12×1.5	55	5.5	M14×1.5(special)	85	8.5
Lock Nut Of Rocker Arm Shaft	M6×0.5	10	1.0	M6×0.75	10	1.0
Rocker Arm Stud	M6×1	24	2.4	M8×1.25(special)	24	2.4
Crankcase Bolt	M6×25	11	1.1	M8×1.25	28	2.8

2. 300 390 420

1) MAIN SPECIFICATION

Model / Specification	300	390	420	440
L×W×H	430×392×425mm	480×320×440mm	480×320×440mm	480×320×440mm
Dry Weight	26kg	32kg	32.5kg	32.5kg
Engine Type	4-Stroke, OHV, Single Cylinder			
Displacement	301ml	389ml	420ml	438ml
Compression Ratio	8.2:1	8.0:1	8.2:1	8.5:1
Bore × Stroke	80×60mm	88×64mm	90×66mm	92×66mm
Maximum Output Power	6.0kW/3,600r/min	7.6kW/3,600r/min	8.5kW/3,600r/min	8.5kW/3,600r/min
Maximum Torque	18N·m /2,500r/min	23N·m /2,500r/min	25N·m /2,500r/min	27N.m/2,500r/min
Cooling System	Forced Air-Cooled			
Ignition System	Transistorized Magneto Ignition(TCI)			
Spark Plug	F6TC	BP6ES (NGK) / F6RTC (NHSP)		
Lubrication System	Forced Splash			
PTO Shaft Rotation	Counterclockwise			

DATA ADJUSTMENT:

Items	Technical data
Spark Plug Clearance	0.7-0.8mm
Valve Clearance (Cold Engine)	Intake: 0.10-0.15mm Exhaust: 0.15-0.20mm

2) TORQUE OF IMPORTANT BOLTS:

Items	Specifications	Torque Valve	
		N·m	Kg·m
Connection-Rod Bolt	M8×1.25(special)	15	1.5
Cylinder Head Bolt	M10×1.25	40	4.0
Flywheel Nut	M16×1.5(special)	95	9.5
Lock Nut Of Rocker Arm Shaft	M6×0.75	10	1.0
Rocker Arm Stud	M8×1.25(special)	24	2.4
Crankcase Bolt	M8×1.25	28	2.8

XIII. ELECTRIC DIAGRAM

1.Electric Starter Engine With Oil Protection System

Combination Switch

	IG	E	ST	BAT
OFF	O	O		
ON				
START			O	O

Bl	BLACK	Br	BROWN
Y	YELLOW	W	WHITE

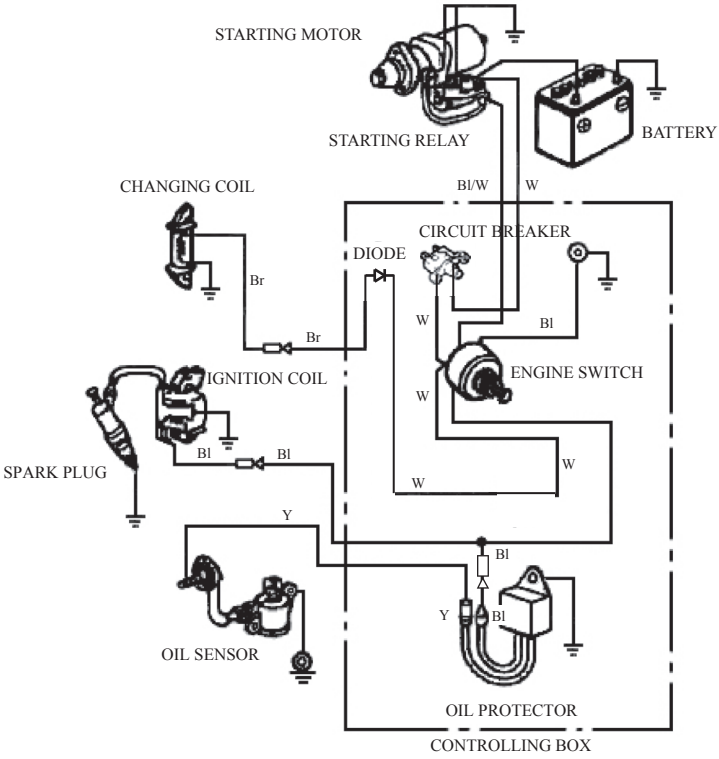

With Oil Protection System

2.No Electric Starter Engine With Oil Protection System

Bl	BLACK
Y	YELLOW
G	GREEN

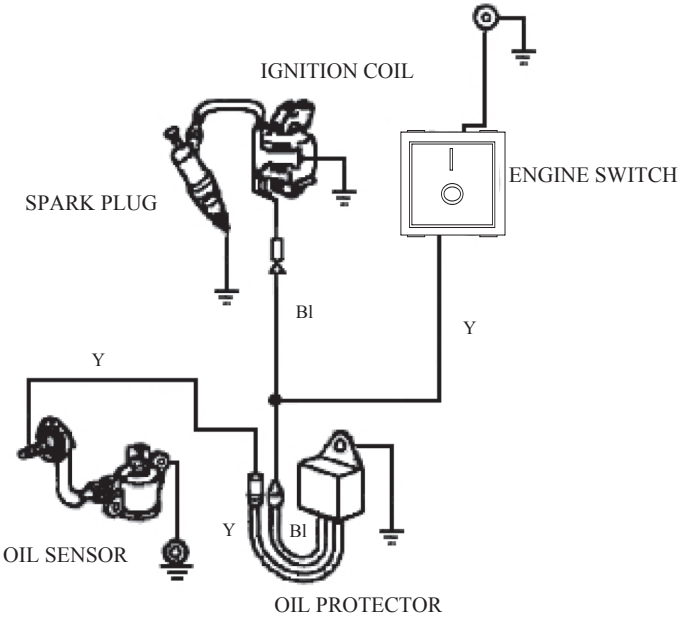

XIV. EASY WORN PARTS AND ACCESSORIES LIST

EASY WORN PARTS LIST:

CRANKCASE GASKET
CYLINDER HEAD COVER GASKET
CYLINDER HEAD GASKET
CARBURETOR GASKET
CARBURETOR INSULATION GASKET
AIR CLEANER GASKET
EXHAUST VENT GASKET
SPARK PLUG
RECOIL STARTER
SEAL GUIDE
OIL SEALING

ACCESSORIES PART:

SOCKET
FORCE BAR

93004–Z010280–0000