MEC06 MINI EXCAVATOR

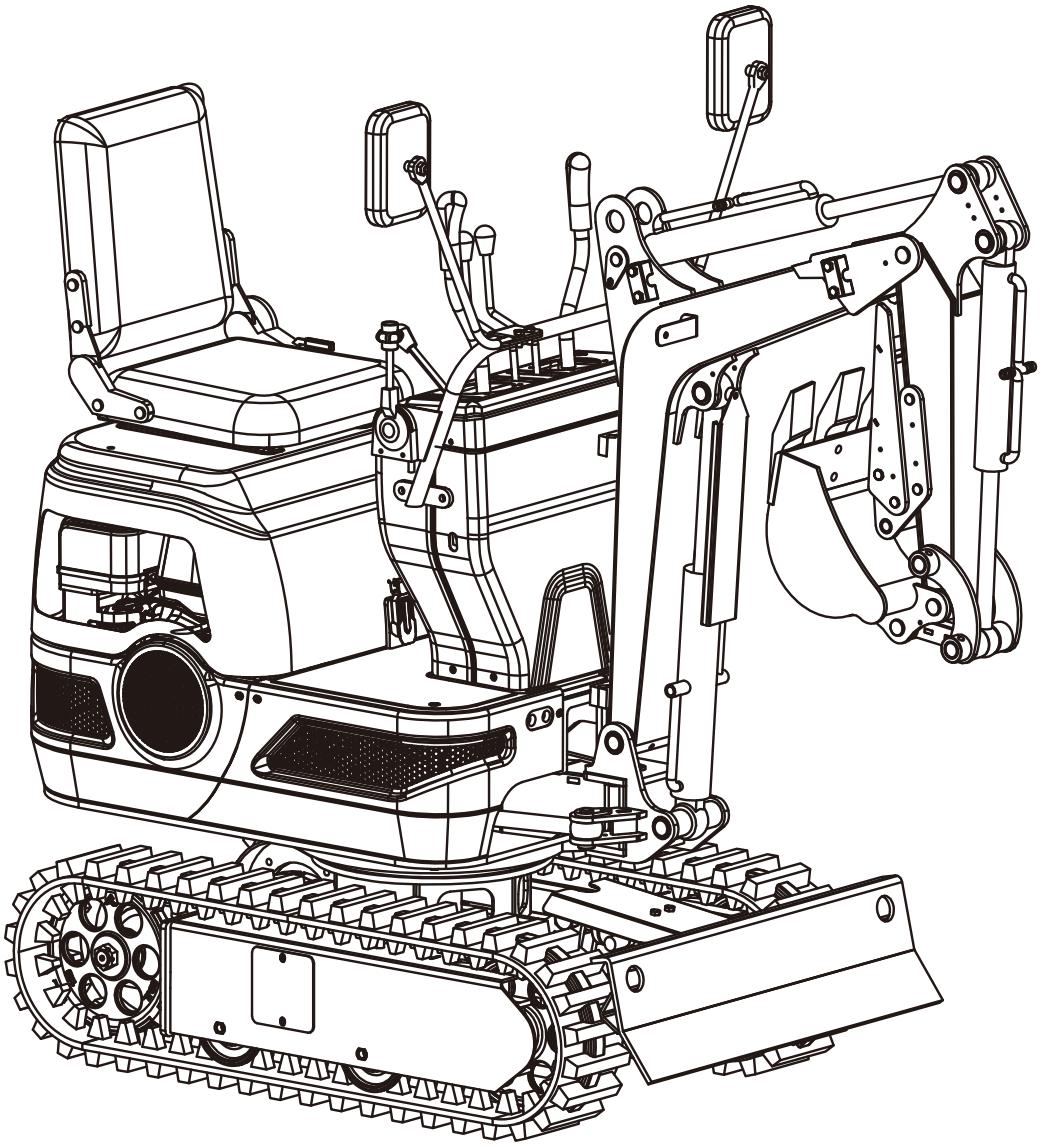

Operator's Manual

CROBA

READ AND UNDERSTAND THE ENTIRE MANUAL BEFORE OPERATING MACHINE

TABLE OF CONTENTS

SAFETY WARNING SIGNS 2
SIGNAL WORDS 2
INTRODUCTION 3
FOREWORD 3
SERIAL NUMBER 3
FRONT, REAR, LEFT, AND RIGHT 4
DESIGNATED OPERATIONS 4
PRODUCT FEATURES 4
RUN-IN PERIOD 4
NOTES ABOUT READING OF THIS MANUAL 4
SAFETY 5
GENERAL PRECAUTIONS 5
PRECAUTIONS DURING PREPARATIONS 7
SAFETY MEASURES AT START 8
OPERATION PRECAUTIONS 9
PRECAUTIONS FOR PARKING 13
PRECAUTIONS DURING TRANSPORT 14
PRECAUTIONS FOR MAINTENANCE 15
SAFETY SIGNS 20
SIGN ON PRECAUTIONS 21
CONTROLS 23
COMPONENT NAME 23
FUSE CASE, FUEL FILLING PORT, SEAT 24
SEAT LOADING AND UNLOADING 24
ELECTRICAL CONTROL PANEL 25
SWITCHES 26
JOYSTICKS AND PEDALS 26
ACCESSORY 28
OPERATIONS 30
BEFORE START OF OPERATIONS 30
START AND STOP OF ENGINE 30
OPERATIONS OF MACHINE 31
TRANSPORTATION 34
34
MAINTENANCE 35
OVERVIEW 35
SERVICE DATA 36
PERIODICAL REPLACEMENT OF HYDRAULIC OIL 37
LIST OF WEARING PARTS 37
CRITICAL SAFETY PARTS 38
TROUBLESHOOTING 40
NO BATTERY POWER 40
RESTART AFTER REFUELING 41
FLASHING OF WARNING LAMPS 41
PARAMETERS 42
BASIC PARAMETERS 42
OVERALL DIMENSIONS OF MACHINE 43
OPERATING RANGE 44
ACCESSORIES 45
PRECAUTIONS FOR OPERATIONS 45
PERIODICAL REPLACEMENT OF HYDRAULIC OIL 45
EXPLODED VIEW & PARTS LIST 46

EXPLANATION OF THE SYMBOLS ON THE PRODUCT

Symbols are used in this manual to draw your attention to potential hazards. The safety symbols and the accompanying explanations must be fully understood. The warnings themselves will not rectify a hazard and cannot replace proper accident prevention measures.

Label	Meaning
	Before commissioning, read and observe the operating manual and safety instructions!
	Wear hearing protection. Exposure to noise can cause hearing loss. Wear a safety helmet. Wear safety goggles. Sparks created during work or fragments, chippings and dust ejected by the device can case sight loss.
	Smoking prohibited. No sparks or flames.
	Do not start the engine by short-circuiting the starter connections.
	Do not touch any parts that are still hot from operation. They can cause severe burns.
	Stay out of the area to avoid serious personal injury or death.
	Watch your hands.
	Be careful, objects can be thrown away during use.

Label	Meaning
	Do not use your bare hands to check for possible leaks.
	Keep away from moving parts.
	Keep away from the fan.
	Keep hands away from moving parts. Moving parts can crush and cut.
	Keep bystanders away.
	Pay attention to safety when working in front of the machine.
	Tipping hazard!
	Move the bucket close to the ground and remove the key when switching off the excavator.
	Switch off the engine, disconnect the spark plug cable and secure that all moving parts are stationary before cleaning, repairing or inspecting the excavator.

Label	Meaning
	Pay attention to the heat of the fan.
	Petrol and its vapours are extremely flammable and explosive.
	Do not touch any hot parts such as the exhaust etc.
	The exhaust gases are dangerous because they contain carbon monoxide. Staying in the area can result in unconsciousness and death.
	3-point lifting device
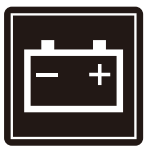	"Charge battery" warning light
	Disconnector earthing cable (negative switch)
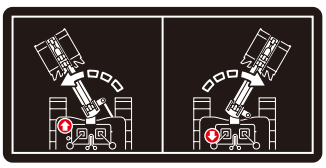	Press the pedal at the front to swivel the boom to the left. Press the pedal at the rear to swivel the boom to the right.

INTRODUCTION

Dear Customer,

We hope your new product brings you much enjoyment and success.

Note:

In accordance with the applicable product liability laws, the manufacturer of this product assumes no liability for damage to the product or caused by the product arising from:

- Improper handling
- Non-compliance with the operating manual
- Repairs carried out by third parties, unauthorised specialists
- Installing and replacing non-original spare parts
- Improper use
- Failures of the electrical system due to failure to observe the national electrical requirements and regulations

Note:

Read the whole text of the operating manual before assembly and commissioning.

This operating manual should help you to familiarise yourself with your product and to use it for its intended purpose.

The operating manual includes important instructions for the safe, proper and economic operation of the product, for avoiding danger, for minimising repair costs and downtimes and for increasing the reliability and extending the service life of the product.

In addition to the safety instructions in this operating manual, you must also observe the regulations applicable to the operation of the product in your country.

Keep the operating manual package with the power tool at all times and store it in a plastic cover to protect it from dirt and moisture. They must be read and carefully observed by all operating personnel before starting the work.

The product may only be used by personnel who have been trained to use it and who have been instructed with respect to the associated hazards.

The required minimum age must be observed.

In addition to the safety instructions in this operating manual and the separate regulations of your country, the generally recognised technical rules relating to the operation of such products must also be observed.

We accept no liability for accidents or damage that occur due to a failure to observe this manual and the safety instructions.

PRODUCT DESCRIPTION

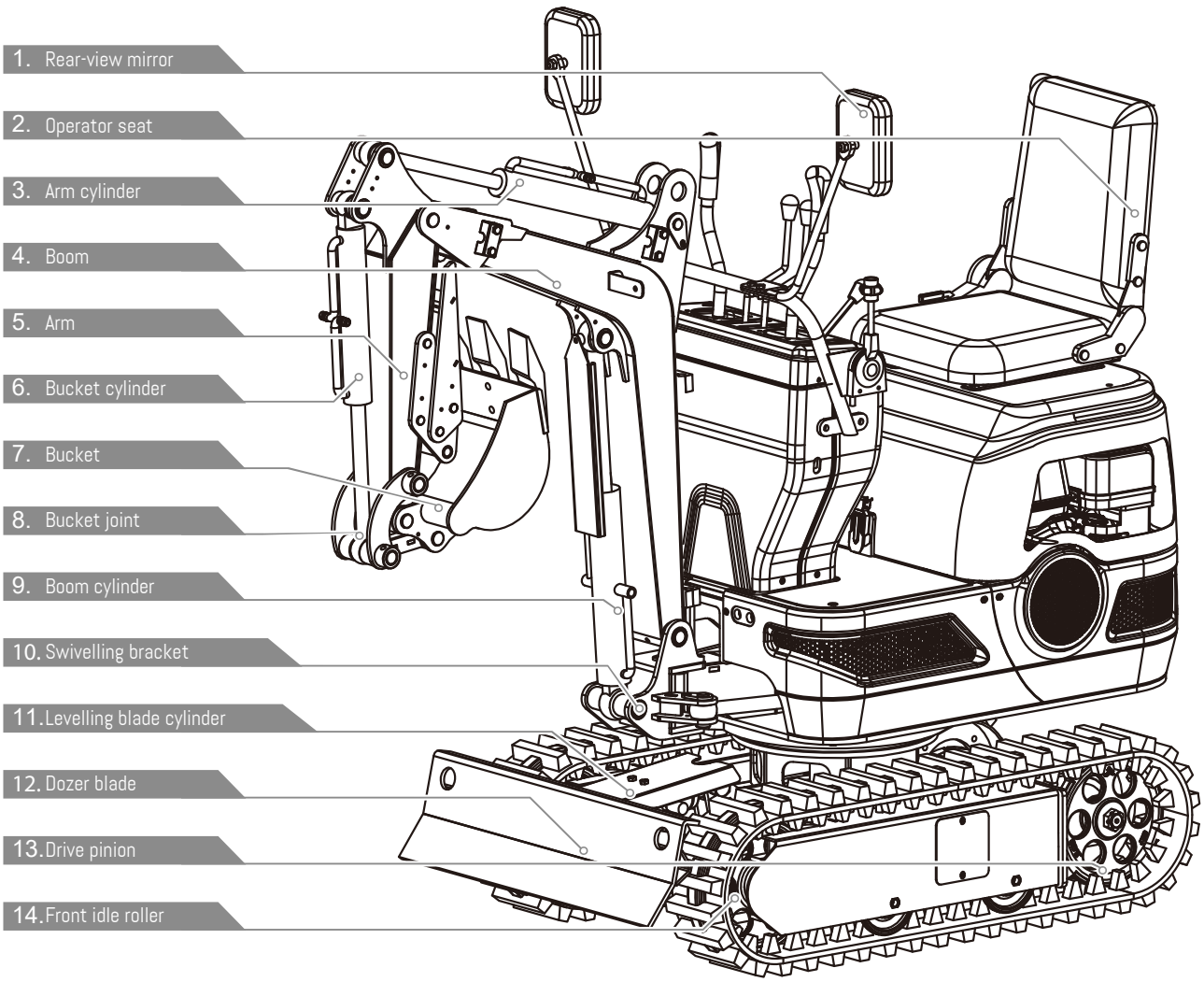

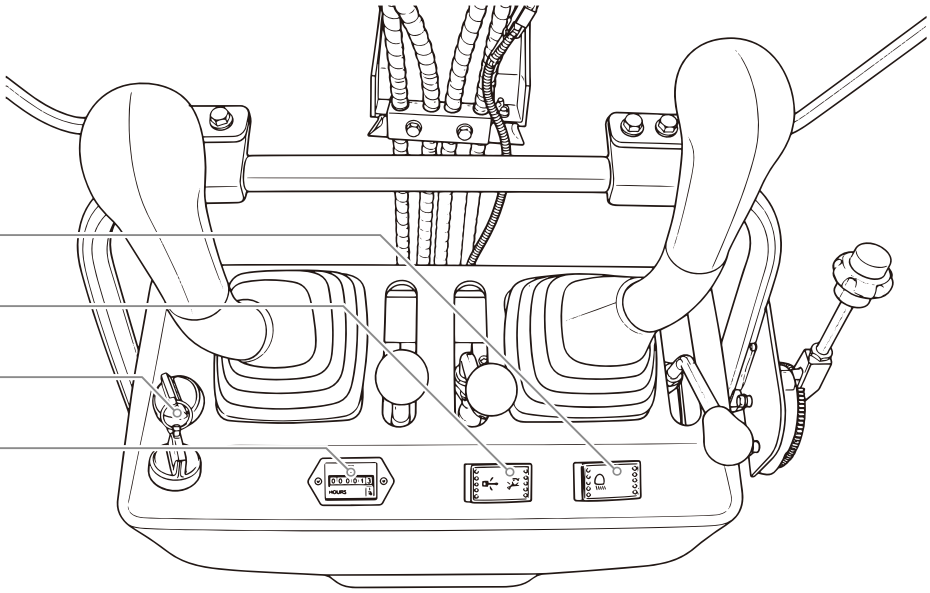

16. Work light switch
17. Horn switch
18. Ignition switch
19. Hour counter

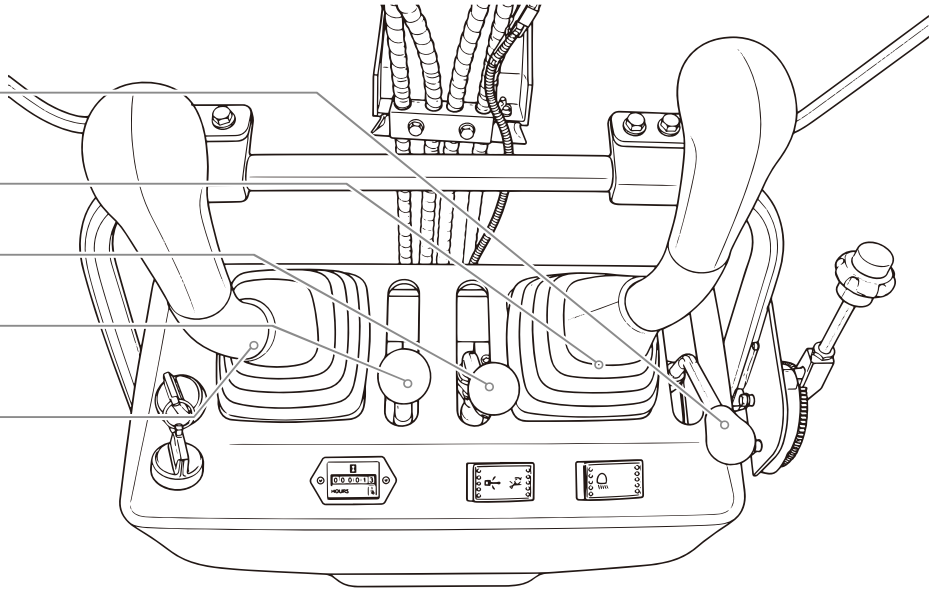

20. Operating lever for dozer blade
21. Operating lever for attachments (right)
22. Drive lever (right)
23. Drive lever (left)
24. Operating lever for attachments (left)

PROPER USE

The mini excavator is suitable for carrying out earthworks and leveling the ground after completion of construction work within the specified technical limits.

The product may only be used in the intended manner. Any use beyond this is improper. The user/operator, not the manufacturer, is responsible for damages or injuries of any type resulting from this.

An element of the intended use is also the observance of the safety instructions, as well as the assembly instructions and operating information in the operating manual.

Persons who operate and maintain the product must be familiar with the manual and must be informed about potential dangers.

The liability of the manufacturer and resulting damages are excluded in the event of modifications of the product.

The product may only be operated with original parts and original accessories from the manufacturer.

The safety, operating and maintenance specifications of the manufacturer, as well as the dimensions specified in the technical data, must be observed.

Please note that our products were not designed with the intention of use for commercial or industrial purposes. We assume no guarantee if the product is used in commercial or industrial applications, or for equivalent work.

The manufacturer is not liable for damage caused by improper use or incorrect operation.

GENERAL SAFETY INSTRUCTIONS

WARNING

Read all safety information, instructions, illustrations and technical data for this product.
Failure to follow all instructions listed below may result in electric shock, fire and/or serious injury.

ATTENTION

When using equipment, several safety warnings must be observed to prevent injuries and damage.

For this reason, please carefully read this operating manual / safety instructions. If you hand the device over to another person, please hand over this operating manual / safety instructions as well. We accept no liability for accidents or damage that occur due to a failure to observe this manual and the safety instruc□tions.

DANGER

A failure to observe these instructions poses an extreme danger of death or the risk of life-threatening injuries.

WARNING

A failure to observe these instructions poses a danger of death or the risk of serious injuries.

CAUTION

A failure to observe these instructions poses a minor to moderate danger of injury.

Note:

A failure to observe these instructions poses a risk of damage to the engine or other property.

- Familiarize yourself with your machine.
- Read the operating manual carefully and make sure you understand its contents, as well as all labels attached to the machine.
- Familiarize yourself with the area of application, as well as limitations of the machine, and particular sources of danger.
- Make sure that you know all the controls and their function exactly.
- Make sure you know how to stop the machine and controls.
- Do not attempt to use the machine without knowing the exact method of operation and the maintenance requirements of the engine and how to avoid accidents resulting in personal injury and/or property damage.
- Keep other people, particularly children, away from your work area.

WORKING RANGE

- Never start or operate the machine in an enclosed space. The exhaust gases are dangerous because they contain the odorless and deadly gas carbon monoxide. Operate the machine only in a well-ventilated outdoor area.
- Never operate the machine without good visibility or lighting conditions.

PERSONAL SAFETY

- Do not use the machine if you have taken drugs, alcohol or medication that affects your ability to operate the machine correctly.
- Wear suitable clothing. Wear long trousers, boots and gloves.
- Do not wear loose clothing, shorts or jewelry of any kind. Tie back long hair so that it is at shoulder height at most. Keep hair, clothing and gloves away from moving parts. Loose-fitting clothing, jewelry or long hair may become caught in the moving parts. Check your machine before starting.
- Leave protective screens in place and in working order.
- Make sure that all nuts, bolts, etc. are securely tightened.
- Never use the machine if it is in need of repair or in poor mechanical condition. Replace damaged, missing or defective parts before use.
- Check the machine for fuel leaks.
- Keep it in good functional order. Do not use the machine if the engine cannot be switched on and off at the corresponding switch.
- A petrol-driven machine that cannot be controlled via the engine switch is dangerous and must be replaced.
- Before starting the machine, get into the habit of checking that screwdrivers and spanners are away from the area around the machine. A screwdriver or spanner that is still in a rotating device part may result in personal injury.
- Be attentive, watch your actions and use common sense when working with the machine.
- Do not overextend yourself. Do not operate the machine barefoot or with sandals or similar light footwear. Wear safety shoes that protect your feet and improve your grip on slippery surfaces.
- Ensure safe footing and balance at all times. This will allow you to better control the machine in unexpected situations.
- Prevent unintentional start-up. Make sure that the engine switch is switched off before transporting the machine or carrying out maintenance work on the machine. Transport or maintenance work on the machine can lead to accidents if the switch is on.

SAFE HANDLING OF PETROL

- Petrol is very flammable and its gases can explode if they ignite.
- Take safety measures when handling petrol to reduce the risk of serious injury.
- Use a suitable petrol can when filling or draining the tank.
- Carry out this work in clean, well-ventilated outdoor areas.
- Do not smoke. Do not allow sparks, naked flames or other sources of fire to get near when filling up with petrol or working with the machine.
- Never fill the tank indoors. Keep earthed, electrically conductive objects, such as tools, away from exposed electrical parts and wires to avoid sparking or arcing. This could ignite petrol gases.
- Always switch off the engine and let it cool down before refilling the fuel tank. Never remove the fuel filler cap or fill fuel into the tank while the engine is running or while the engine is hot.
- Do not use the machine if you know there is a leak in the fuel system. Slowly loosen the fuel filler cap to release any pressure in the tank. Never overfill the tank (petrol should never be above the marked maximum fill level). Close the fuel tank securely again with the fuel filler cap and wipe up any spilled petrol.
- Do not use the machine if the fuel filler cap is not screwed tightly shut. Avoid ignition sources near spilled petrol. If petrol has been spilled, do not attempt to start the machine. Move the machine away from the area of the spillage and prevent the formation of ignition sources until the petrol gases have dissipated.
- Store petrol only in containers specially manufactured for this purpose.
- Store petrol in a cool, well-ventilated area away from sparks and naked flames or other sources of ignition. Never store petrol or the machine with a filled tank in a building where petrol gases could reach sparks, naked flames or other ignition sources such as water heaters, ovens, clothes dryers or similar.
- Allow the engine to cool before storing the machine in an enclosed area.

USE AND CARE OF THE MACHINE

- Never pick up or carry the machine while the engine is running.
- Do not handle the machine violently.
- Use the right machine for your area of application. The right machine will do the job it was designed for better and more safely.
- Do not change the speed governor setting of the engine or over-rev it. The speed control system controls the maximum speed of the engine with maximum safety.
- Do not hold your hands or feet near rotating parts.
- Avoid contact with hot petrol, oil, exhaust gases and hot surfaces. Do not touch the engine or exhaust silencer. These parts become particularly hot during use. They are still hot a short time after the machine is switched off.
- Allow the engine to cool down before carrying out maintenance or adjustment work.
- If the machine starts to make unusual noises or vibrations, switch the engine off immediately, disconnect the spark plug cable and determine the cause. Unusual noises or vibrations are usually a safety sign of faults.
- Only use assembly and accessory parts approved by the manufacturer. Failure to do so may result in injury.
- Service the machine. Check for misalignment or jamming of moving parts, damaged parts and other conditions that could impair function of the machine. Have the machine repaired before any further use if you find any damage. Many accidents are the result of poorly maintained equipment.
- Keep the engine and silencer free of grass, leaves, excess grease or soot encrustation to reduce the risk of fire.
- Never pour or splash water or any other liquid onto the machine.
- Keep the handles dry, clean and free of small parts.
- Clean the machine after every use.
- Follow the applicable waste disposal guidelines for petrol, oil etc. to protect the environment.

- Keep the switched-off machine out of the reach of children and do not allow persons who are not familiar with the machine or these instructions to use the machine. The machine is dangerous in the hands of untrained operators.

SERVICE

- Before cleaning, repairing, inspecting or adjusting, switch off the engine and ensure that all moving parts have come to a standstill.
- Always ensure that the throttle lever is in the "off" position. Disconnect the spark plug cable and keep it away from the spark plug to prevent accidental start-up.
- Have your machine serviced by qualified personnel. Use only original spare parts. This ensures that the machine remains safe.

Save all warnings and instructions for future reference.

RESIDUAL RISKS

The product has been built according to state-of-the-art and the recognized technical safety rules. However, individual residual risks can arise during operation.

- Health hazard due to electrical power, with the use of improper electrical connection cables.
- Furthermore, despite all precautions having been met, some non-obvious residual risks may still remain.
- Residual risks can be minimized if the "Safety Instructions" and the "Intended Use" together with the operating manual as a whole are observed.
- Avoid accidental starting of the product: the operating button may not be pressed when inserting the plug in a socket. Use the tool attachment that is recommended in this operating manual. This is how to ensure that your product provides optimum performance.
- Keep your hands away from the working area when the product is in operation.

PARAMETERS

Model	MEC06
Operating Weight:	1,345 lb
Bucket Capacity:	0.39 ft³
Bucket Width:	11.4 in
Digging Force(Arm):	944 lbf
Digging Force(Bucket):	1,978 lbf
Engine:	300cc,Gas
Starting:	Key-type starter Switch and Shutdown
Travel Speed:	0 – 1.24 mph
Traction Force:	742 lbf
Swing Speed:	9.5 rpm
Gradeability:	15°
Ground Contact Pressure:	3.84 psi
Boom Swing:	Left 65° / Right65°
Track Shoe type:	Rubber Crawler
Track Shoe width:	5.9 in
Pump Capacity:	4.76 gpm
Hydraulic reservoir:	2.64 gal
Width for machine	28.1 in

Subject to technical changes!

Noise and vibration

WARNING

Noise can have serious effects on your health. If the machine noise exceeds 85 dB, please wear suitable hearing protection.

Noise data	
Sound power level L_{WA}	93.0 dB
Sound pressure level L_{pA}	82.5 dB
Uncertainty $K_{wa/pA}$	2.0 dB

UNPACKING

Open the packaging and carefully remove the product.

Remove the packaging material, as well as the packaging and transport safety devices (if present).

Remove the M8 fastening screws from the iron frame and remove the iron frame. Lift the machine down.

Check whether the scope of delivery is complete.

Check the product and accessory parts for transport damage. In the event of complaints the carrier must be informed immediately. Later claims will not be recognized.

If possible, keep the packaging until the expiry of the warranty period.

Familiarize yourself with the product by means of the operating manual before using for the first time.

With accessories as well as wearing parts and replacement parts use only original parts. Spare parts can be obtained from your specialist dealer.

When ordering please provide our article number as well as type and year of manufacture for the product.

WARNING

The product and the packaging material are not children's toys! Do not let children play with plastic bags, films or small parts! There is a danger of choking or suffocating!

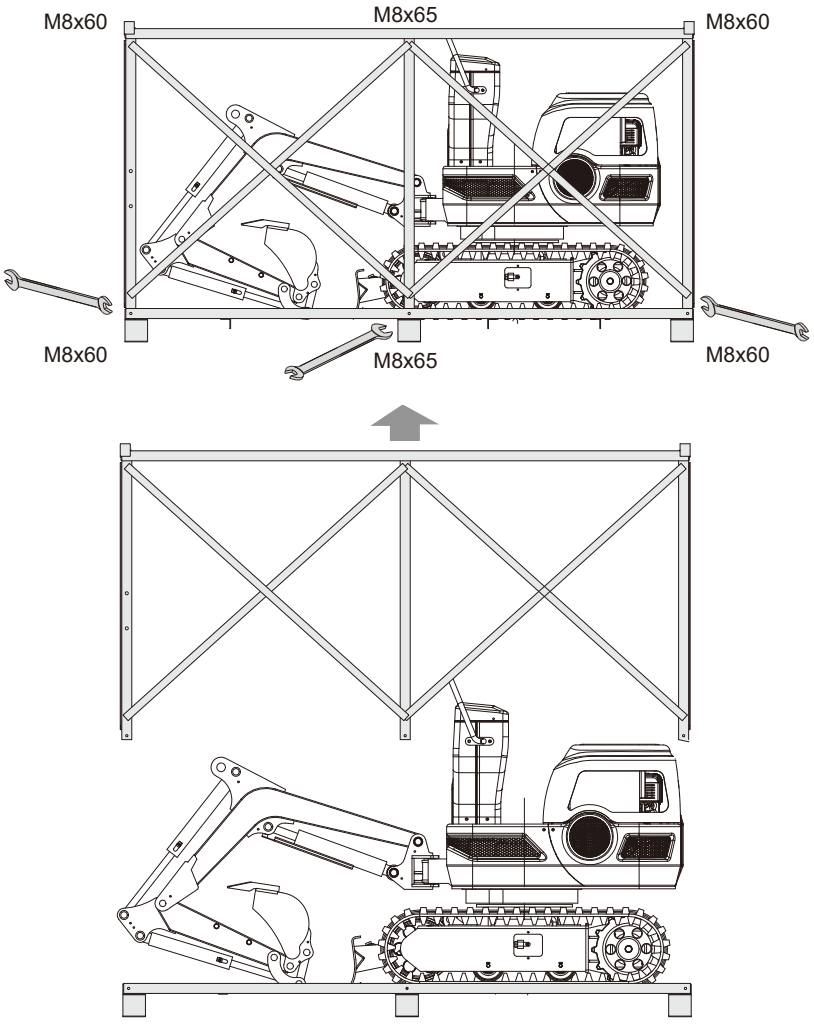

ASSEMBLY

If you follow the assembly instructions below, you will have the machine assembled in just a few minutes.

FITTING THE OPERATING LEVERS

1. Remove the flat nut M12 from the operating lever and loosen the set screw M6x16 and the nut on the side of the fastening opening.
2. Slide the operating lever through the rubber sleeve and the M12 flat nut into the mounting opening on the switch box.
3. Turn it to a suitable angle for operation and fasten the M16 flat nut to secure it.
4. Fasten the M6x16 set screw and the nut from the side. Repeat these steps to fit the other lever.
5. Screw the knobs to the operating levers.

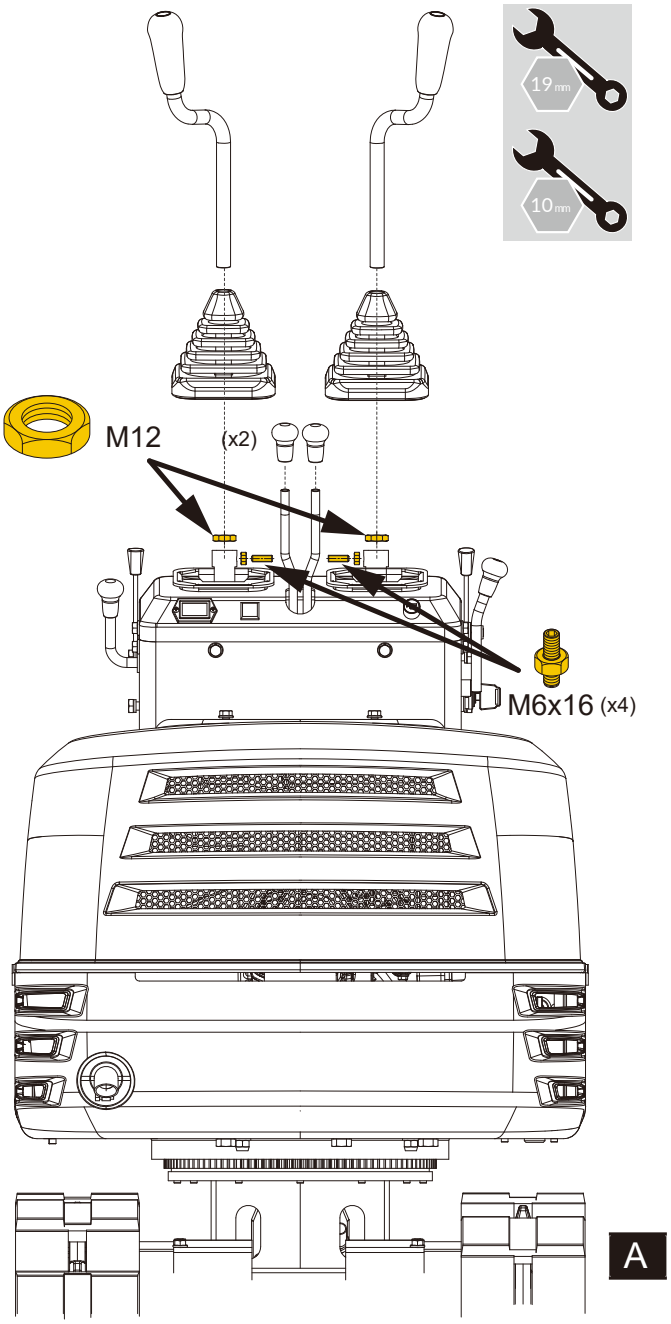

STRUCTURE OF THE HANDLEBARS

1. Unscrew the M10x20 screws, washers and spring washers from the switch box.
2. Attach the handlebar to the sides of the switch box.
3. Align the openings and secure the connection with the screws and washers.

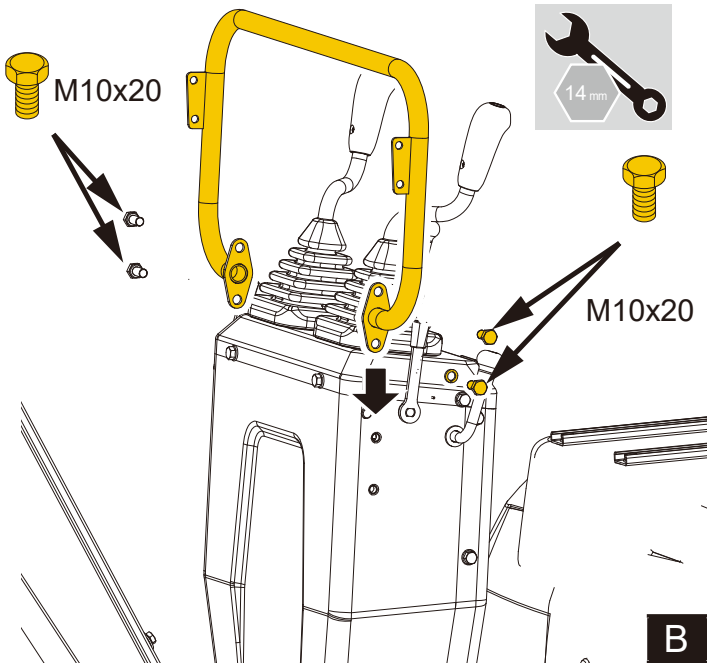

FITTING THE REAR-VIEW MIRRORS

1. Remove the M10x20 screws and nuts from the mirror connections.
2. Attach the connector to the brackets on the handle bar using the screws and nuts. Ensure that the mirrors are facing backwards

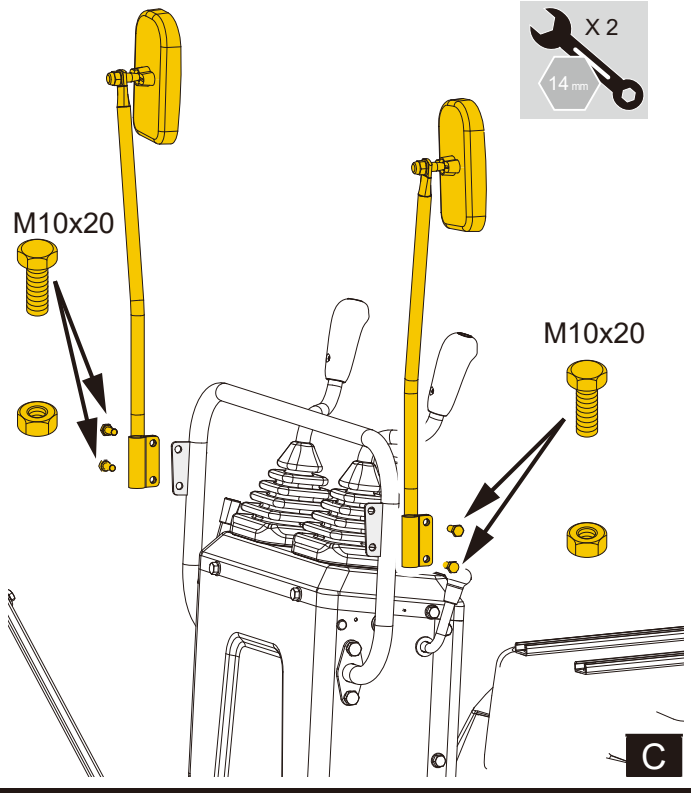

FITTING THE OPERATOR SEAT

1. Open the bonnet and align the four bolts on the hole.
2. Tighten the bolt with M8 nut

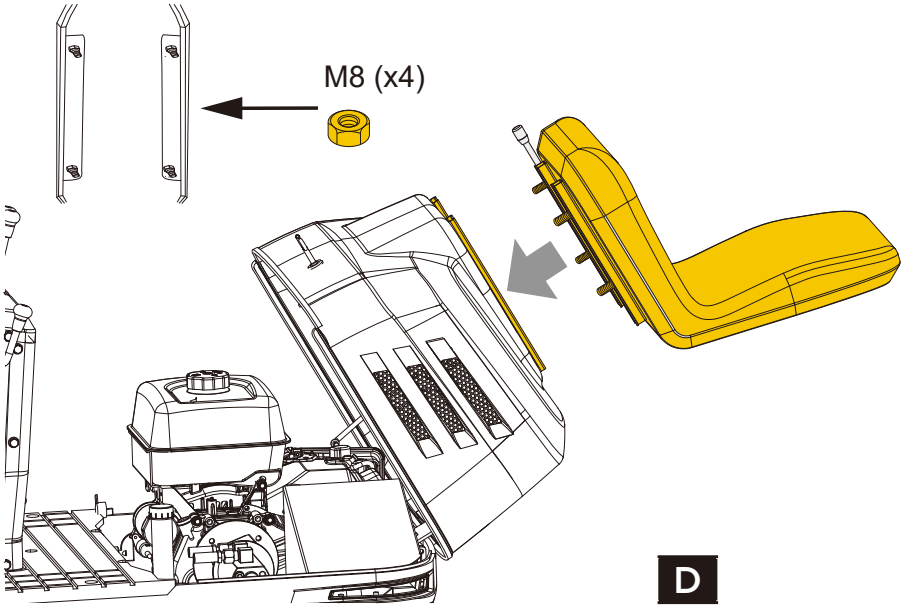

WARNING

Always remove the battery before carrying out adjustments on the product.

BEFORE COMMISSIONING

1. Familiarize yourself with the excavator and be aware of its limitations. Read this operator's manual carefully before starting the excavator.

2. Observe the danger, warning and caution notices on the machine.

3. The crawler width is 710 mm. Work in the right lane.

4. Do not operate the excavator under the influence of alcohol, medication or other substances. Tiredness is also dangerous.

5. Check the surroundings carefully before using the excavator or installing attachments.

- The excavator must not be used in a contaminated environment.
- Neither the excavator as a whole nor its internal components may be used in potentially explosive atmospheres.
- Pay attention to the distance overhead for electrical cables.

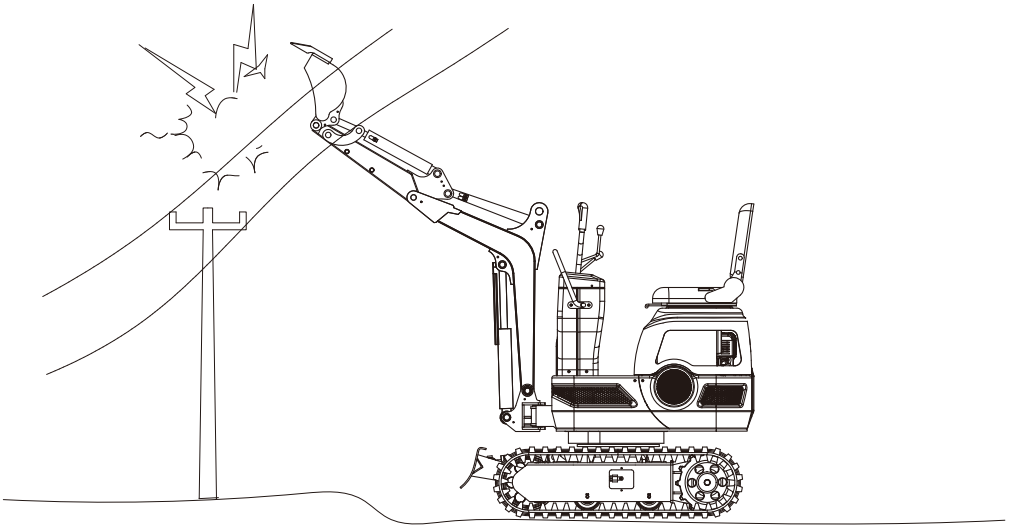

- Check for underground pipes and cables.
- Check for hidden holes, obstacles, soft ground and overhangs.

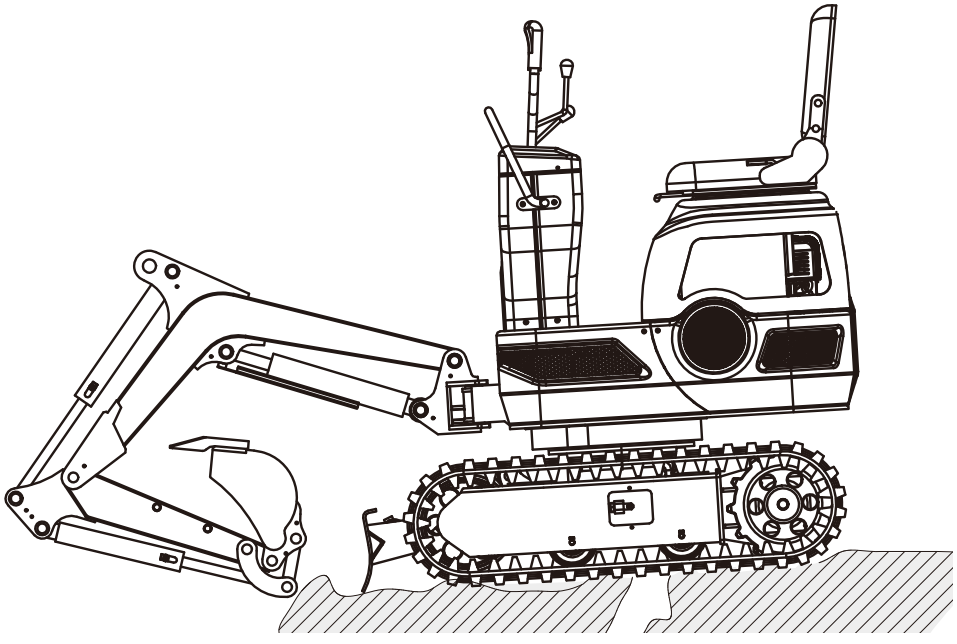

•Do not allow persons to remain within the working area of the excavator.

6. Do not allow other persons to use this machine until they have been thoroughly familiarized with the operation and work instructions. Ensure that you have read and understood the operator's manual.

7. Do not wear loose, torn or oversized clothing when working with the excavator. Clothing can get caught in rotating parts or controls and lead to accidents or injuries. Wear appropriate safety clothing as required and in accordance with legal regulations, e.g. safety helmet, safety shoes, ear protection, work gloves, etc.

8. Do not allow passengers to climb onto parts of the excavator seat during operation.

9. Check the mechanical parts for proper adjustment and possible wear. Replace worn or damaged parts immediately. Check nuts and bolts regularly for tightness. (Details can be found under "Care and maintenance".)

10. Keep your excavator clean. Heavy soiling, grease, dust and grass can catch fire and cause accidents or injuries.

11. Only use approved attachments.

12. Before starting the excavator, ensure that it has been filled with 10 petrol, lubricated, oiled and other maintenance work has been carried out.

13. Do not modify the excavator as this can lead to unforeseen safety problems.

DAILY CHECKS

To avoid damage, it is important to check the condition of the excavator before starting up.

CAUTION

Only carry out maintenance work on the excavator on level ground with the engine switched off and the safety devices in the "Locked" position.

CONTROLS

- Walk around the excavator and check for visible damage and wear.
- Check the fuel level.
- Check the oil level.
- Check the hydraulic oil level.
- Check the air filter for blockages.
- Check the hour counter.
- Check the lighting system.
- Check the condition of the hazard, warning and caution labels. (See "DANGER, WARNING AND CAUTION LABELS" in "SAFE OPERATION".)

COMMISSIONING

ATTENTION

Always make sure the product is fully assembled before commissioning!

1. Get on and off the machine in a safe manner. Always look in the direction of the machine. Always use the handrails and existing steps and keep your balance. Do not hold on to the control levers and switches. Do not jump from the stationary or moving machine.

2. Only start and control the excavator from the operator's seat. The driver must not lean out of their seat when the engine is running.

3. Before starting the machine, make sure that all operating levers are in the neutral position.

4. Do not start the engine by bridging the connections of the starter motor. Do not attempt to bypass the ignition lock, otherwise the engine could start suddenly and the excavator could start moving.

5. Ensure that the bulldozer blade is at the front. (The bulldozer blade must be raised.) If the swivel frame has been rotated by 180°, i.e. the bulldozer blade is at the rear from the operator's point of view, the direction of travel is opposite to the direction of travel of the levers. (If the drive lever is moved forwards, the excavator moves backwards as seen by the operator.)

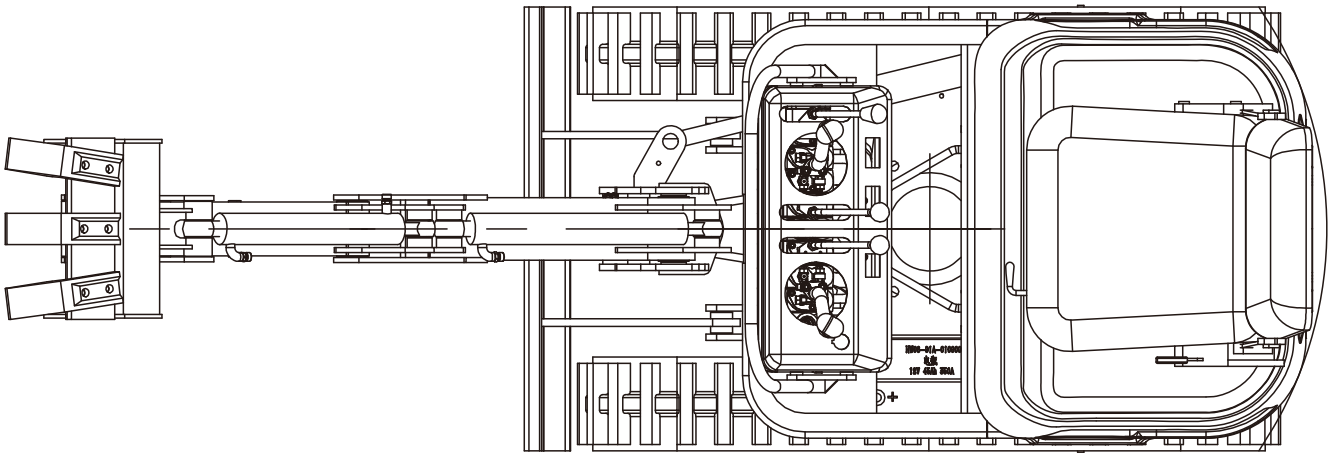

6. Do not run the engine in closed or poorly ventilated spaces. Carbon monoxide is colorless, odorless and deadly.

7. Leave all safety elements and cladding in place. Replace damaged or missing safety devices.

8. Precautionary measures against overturning. Keep away from steep slopes and embankments to ensure safe operation. Do not swivel the bucket downwards. Lower the bulldozer blade when digging. Keep the bucket as low as possible when travelling uphill. Turn carefully on slopes. Do not keep the excavator close to the edges of trenches and embankments, as the earth could give way due to the weight of the excavator.

9. Always pay attention to where the excavator is moving. Keep an eye out for obstacles.

10. Keep sufficient distance from ditches and bank edges. Protection of children! If the operator does not pay attention to the presence of children, tragic accidents can occur. Children are generally attracted to machines and their activities.

11. Never assume that children will stay where you last saw them.
12. Keep children away from the work area and leave them under the supervision of a responsible adult.
13. Pay attention and switch off your machine if children enter the work area.
14. Never transport children on your machine. There is no safe place for them there. They could fall down and be run over or interfere with the controls of your machine.
15. Do not allow children to operate the machine, even under adult supervision.
16. Never allow children to play on the machine or its attachments.
17. Take extra care when reversing, look behind and down and make sure the area is clear before you start moving.
18. If possible, park the machine on firm, flat and level ground. Lower the attachments to the ground, remove the key from the ignition lock and wedge

STARTING THE ENGINE

Start the engine as follows:

1.Establish power supply with Switch.

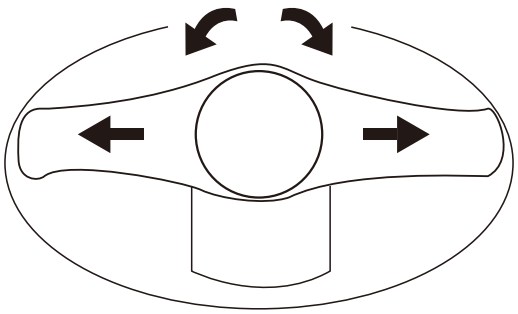

2. Before starting the engine, make sure that all control levers are in the neutral position.

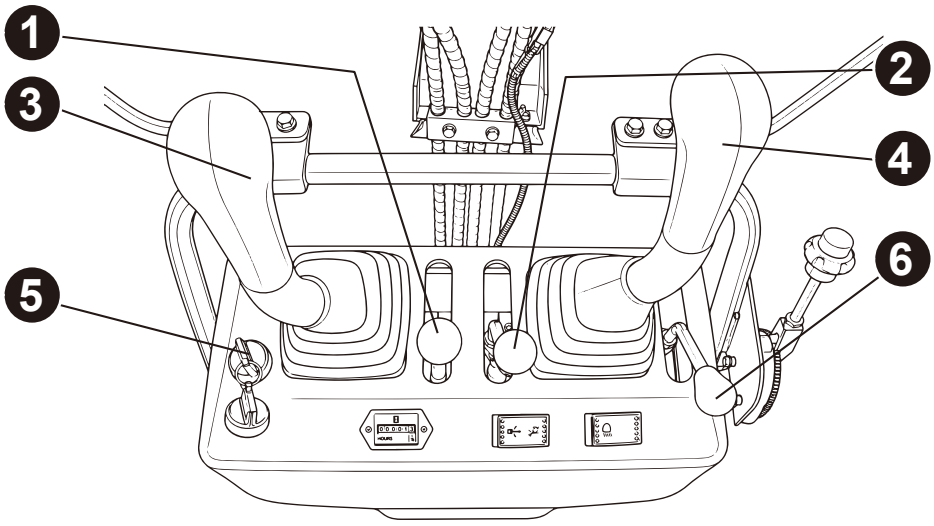

(1) Drive lever (left)
(2) Drive lever (right)
(3) Attachment operating lever (left)
(4) Attachment operating lever (right)
(5) Ignition switch
(6) Operating lever for bulldozer blade

3.Press the lock button and the set the throttle lever to "half throttle"(=middle position between "fast" and "slow").
4.Pull the choke lever (the choke is closed.)
5.Insert the ignition key into the ignition lock and turn it to the "ON" position until the engine starts
6.Loosen the choke lever

NOTE:

If the battery is empty, the machine can be started by pulling the pull starter.

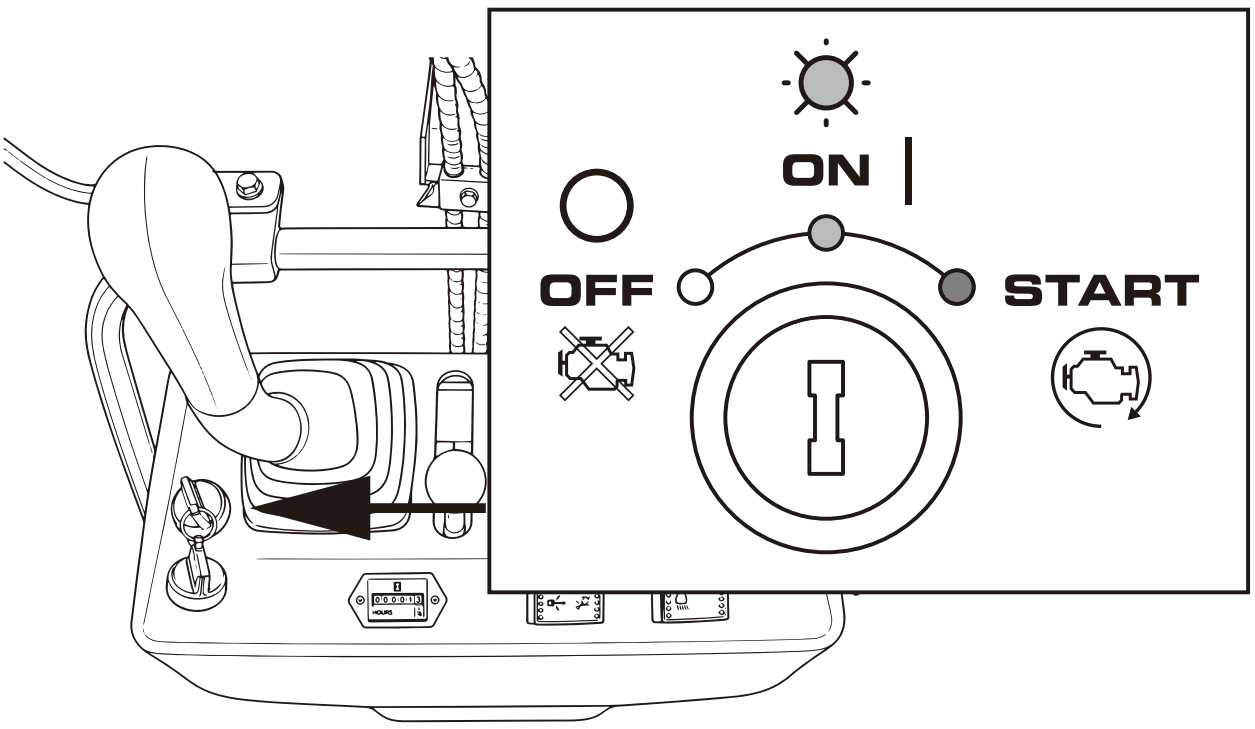

7. Pull out 1/2 of the throttle handle before starting. Pull the air regulator handle back down and set the start key to "ON" for five seconds to start. When the petrol engine starts, the left-hand air regulator handle resets. (Note that the petrol engine can be started when the vehicle is warm without pulling the air regulator handle).
8. Let go when the engine has started. The key automatically returns to the "ON" position.

HOUR COUNTER

The hour counter shows the total operating hours of the excavator.

READING THE COUNTER

The counter counts up by 1 for each hour of operation. The electrical counter continues when the engine stops and the key is still in the "ON" position.

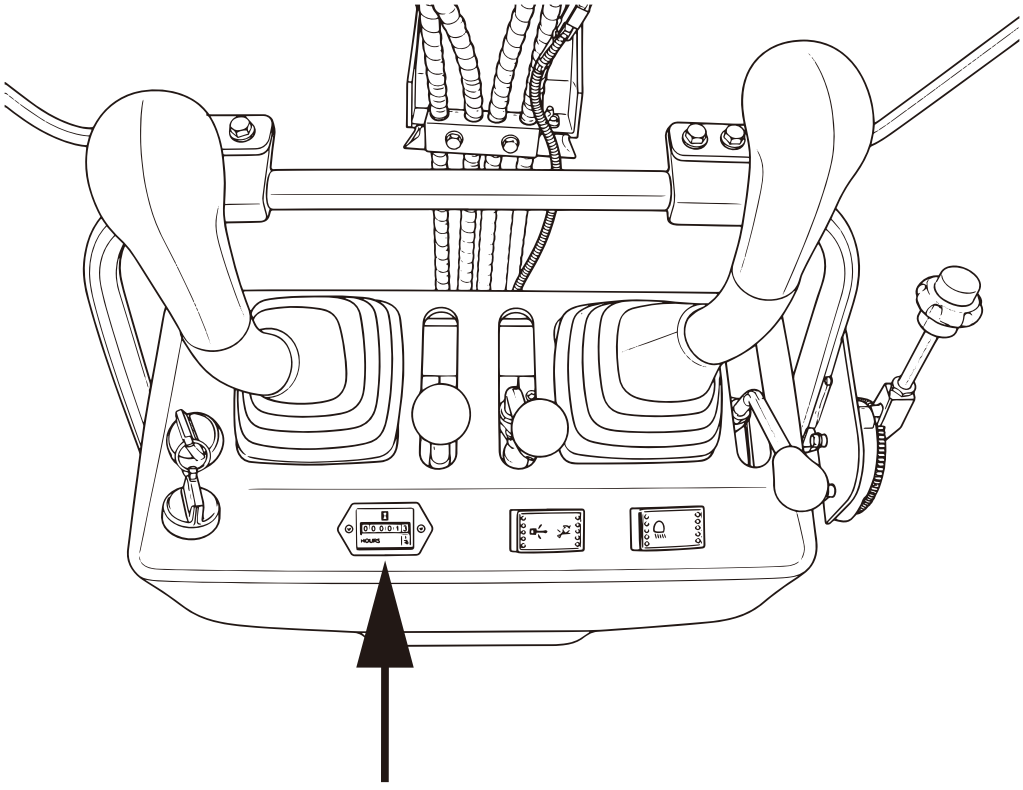

CHECKPOINTS AFTER STARTING THE ENGINE

Check the following points after starting the engine, but before starting work:

1. Move the throttle lever to the "LOW" position and allow the engine to idle for approx. 5 minutes. This warms up the engine oil and allows it to penetrate all parts of the engine.

Note: This operation in idle mode is usually called "warming up".

2. After the engine has warmed up, check as follows:

- The color of the exhaust gases is normal and no abnormal noises or vibrations can be heard.
- No liquid escapes from the pipes or hoses.

Stop the engine immediately if any of the following circumstances occur:

- The speed of the engine suddenly increases or decreases.
- Sudden abnormal noises.
- The exhaust fumes are black.

ATTENTION

In these cases, the excavator must be checked and maintained in accordance with the dealer's instructions.

STARTING THE ENGINE WHEN COLD

ATTENTION

Ensure that the safety lever is locked during warm-up.

1. Pull the throttle lever out by 1/3.
2. Pull the air regulator handle back down and the start key to "ON" for five seconds to start. When the petrol engine starts, the left-hand air regulator handle resets. (Note that the petrol engine can be started when the vehicle is warm without pulling the air regulator handle).
3. Release the key when the engine has started. It automatically returns to the "ON" position.

Note: After starting the engine, allow it to warm up for about 10 minutes without load. If the temperature of the hydraulic fluid is too low, the function will be impaired. Do not use the excavator under full load until the engine has warmed up sufficiently.

SWITCHING OFF THE ENGINE

WARNING

Do not leave the bucket or bulldozer blade raised, as someone could accidentally touch the levers and cause serious accidents. Lower all attachments to the ground, otherwise accidents may occur.

Allow the engine to idle for about 5 minutes to cool down.

1. Move the throttle lever to the idle position.
2. Carefully lower the attachments to the ground using the levers.
3. To stop the engine, turn the key to the "OFF" position and remove the key.

OPERATION

CHECKING THE CONTROLS DURING OPERATION

Switch off the engine immediately in the following cases:

Pay attention to the following points after starting the engine, but before starting work:

- The speed of the engine suddenly increases or decreases.
- Sudden abnormal noise development.
- The exhaust gases suddenly become very dark.

Observe the following controls during operation to ensure normal function.

WARNING

Push the right-hand handle bar forwards if the engine stops suddenly so that the bucket falls down and there are no malfunctions that could lead to accidents due to the bucket falling down.

RUNNING IN THE NEW EXCAVATOR

The service life of the new excavator is influenced by operation and maintenance. Your new excavator was carefully inspected and tested before it left the factory. Nevertheless, all moving components must be run in during the first 50 hours. Do not work at full speed and load during this time. It is extremely important to run in the excavator correctly in order to achieve its full performance and service life. The following points should always be observed during the running-in phase. Do not work at full speed or full load for the first 50 working hours.

- Allow the engine to warm up sufficiently in the cold.
- Do not increase the engine speed more than necessary.

OIL CHANGE DURING THE RUNNING-IN PHASE

Lubricating oil plays a particularly important role during the running-in phase of the excavator.

The various moving parts have not yet been run in, so that many fine metal particles develop which can cause damage or shorten the service life of many components. Pay attention to the intervals between oil changes and carry them out sooner rather than later. See "Care and maintenance" for more details on lhgn.

STARTING UP

CAUTION

The excavator may only be used by persons who are familiar with its operation. Do not allow anyone other than the operator to work with the excavator.

Adjusting the operator's seat

CAUTION

Before adjusting the operator 's seat, make sure that nobody puts their hands on the bonnet behind the seat.

After adjusting the seat, make sure that the seat adjustment is engaged.

1. Move forwards and backwards: Move the seat forwards and backwards while holding the adjustment lever.
2. Move the locking lever to the "unlock" position.
3. Move the locking lever to the "unlock" position and lift the lower side of the bucket 20 cm to 40 cm off the ground.

Work light switch

When the key is in the "ON" position, the lights are switched on by tapping the switch.

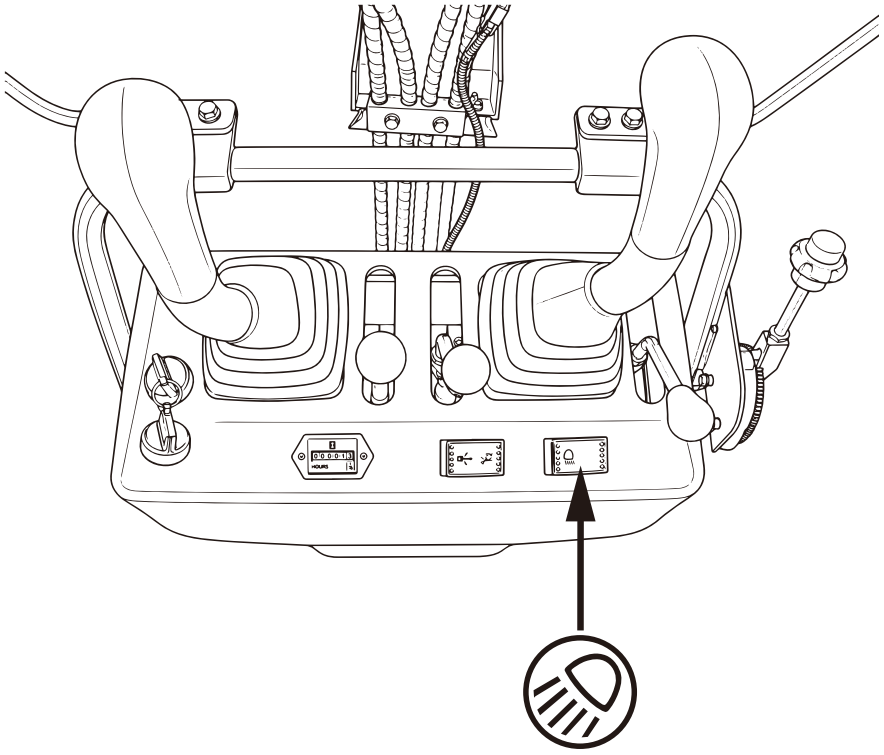

ATTENTION

The brightness in the vicinity of the machine must be above 500 lux.

Night mode

When the key is in the "ON" position, the lights are switched on by tapping the switch.

CAUTION

Visibility is limited in the dark, so work lighting alone is not enough. Prepare additional lighting and observe the safety regulations and special regulations for working at night.

Drive lever

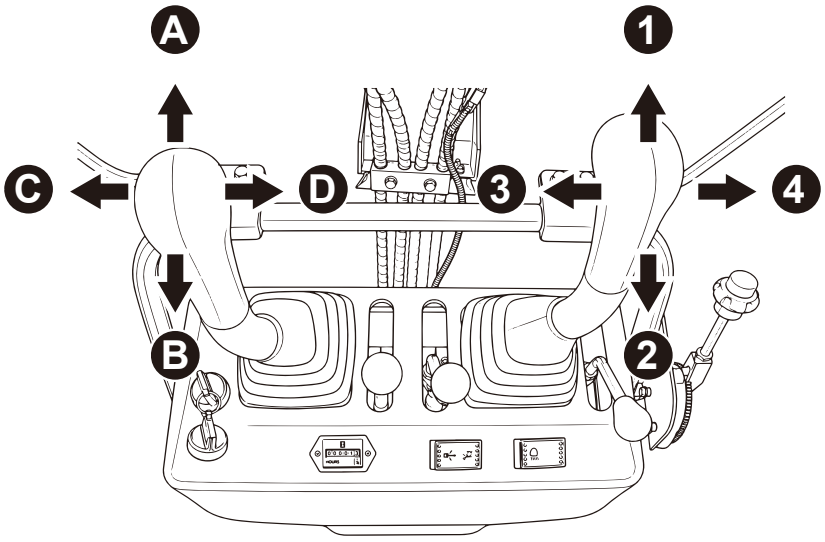

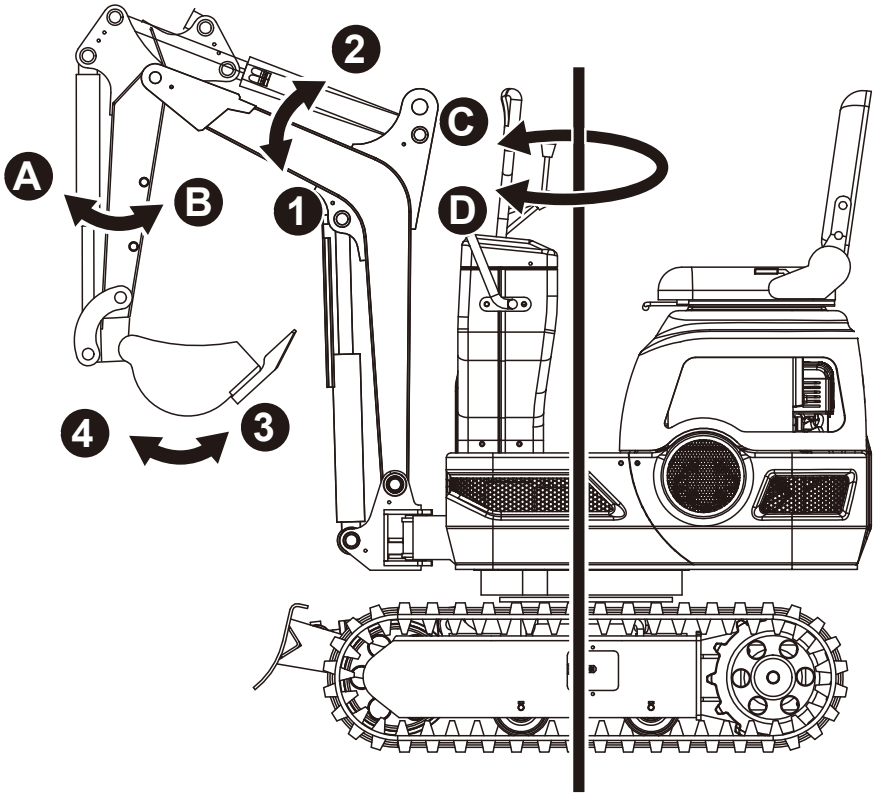

Position of the lever		Movement
Front left attachment operating lever	A	Extend arm
	B	Retract arm
	C	Swivel left
	D	Swivel right

Position of the lever		Movement
Front right attachment operating lever	1	Lower the boom
	2	Raise the boom
	3	Dig bucket
	4	Empty bucket

OPERATING THE BOOM

To raise the boom, pull the operating lever of the boom backwards. The boom is equipped with a damping cylinder that prevents the excavated material from falling out of the bucket. If the hydraulic oil temperature is low (e.g. immediately after starting the engine), the damper function only starts with a slight delay (approx. 3 to 5 seconds). This is due to the viscosity of the hydraulic oil and is not a sign of a malfunction.

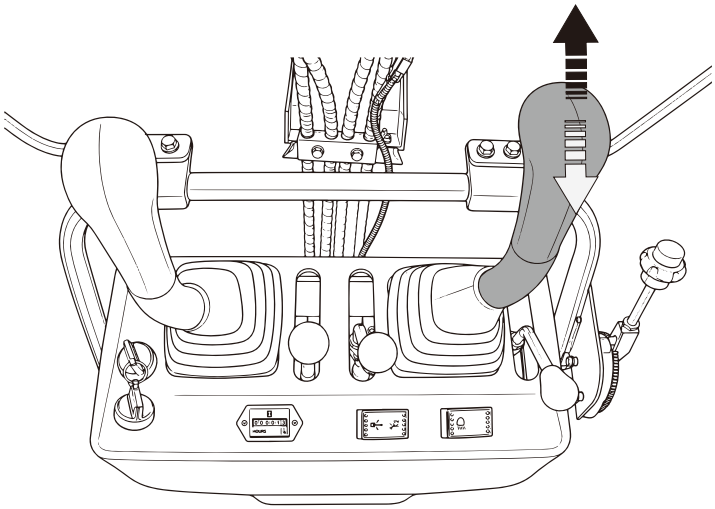

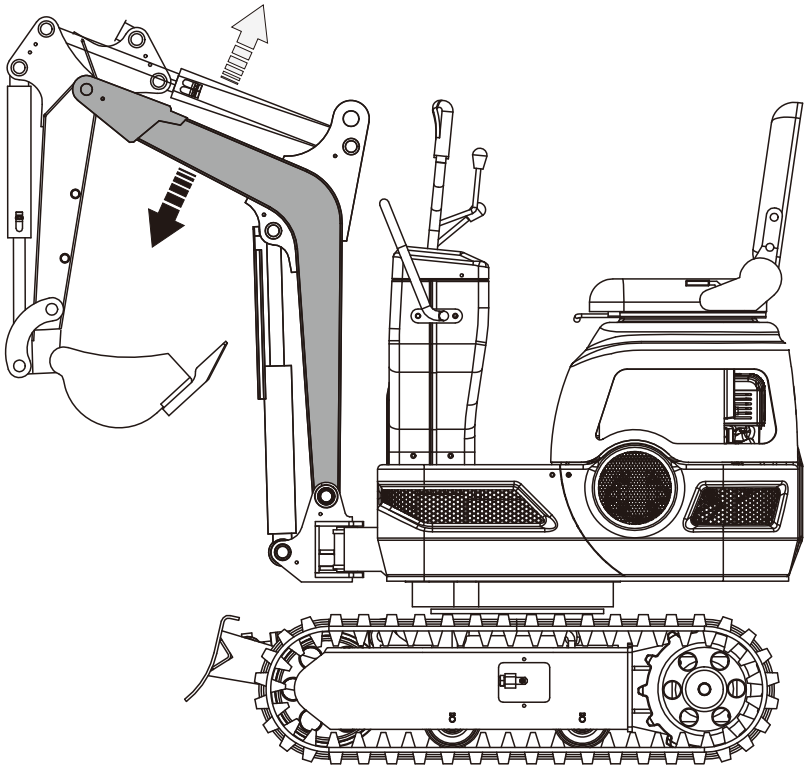

ATTENTION

When lowering the boom, make sure that it does not hit the dozer blade and that the excavator teeth do not touch it.

OPERATING THE ARM

Pull the left operating lever for the attachment backwards and the arm is retracted. Push the operating lever forwards to extend the arm.

ATTENTION

When moving the arm, the movement may pause for a brief moment if the arm is in a vertical position. This is because the maximum load on the arm and bucket is reached in this position and the hydraulic pressure in the cylinder is not high enough. This is a characteristic of the hydraulic system and not a sign of a malfunction.

OPERATING THE BUCKET

To dig with the bucket, move the operating lever for the right attachment from the "Neutral" position to the left. Move the operating lever to the right and the bucket is pushed outwards and the contents are poured out.

SWIVELLING OPERATION

ATTENTION

Hen working in groups, always let the others know in advance what you intend to do.

Keep the work area clear!

IMPORTANT!

Never move the left attachment operating lever abruptly from right to left (or vice versa). According to the law of inertia, this causes a shock load on the swivel motor gearbox and the part-turn motor. In addition, the service life of the excavator is shortened. Remove the swiveling locking pin before carrying out swiveling operations.

1. Tilt the operating lever to the left and the upper superstructure will rotate to the left.
2. Tilt the operating lever to the right and the upper superstructure will rotate to the right.

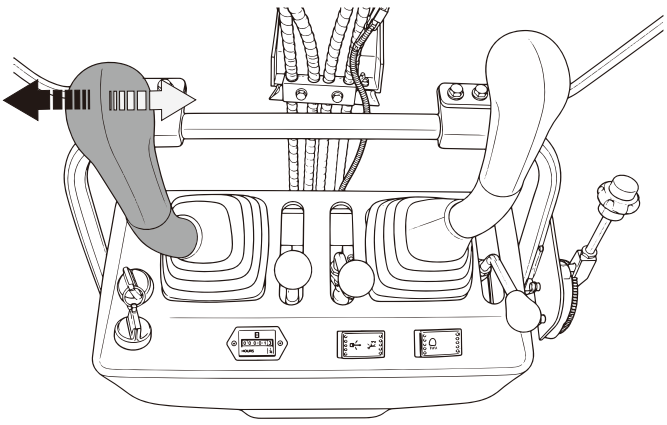

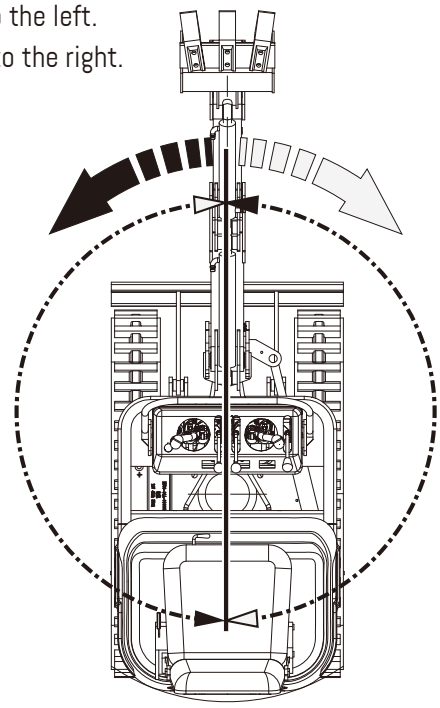

SWIVELLING THE OUTRIGGER

1. Press the pedal at the front to swivel the boom to the left.
2. Press the pedal at the rear to swivel the boom to the right.

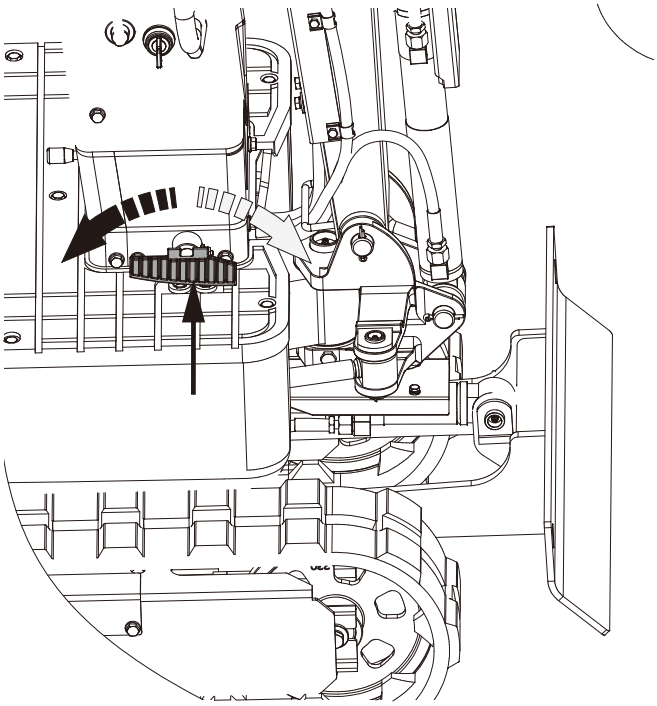

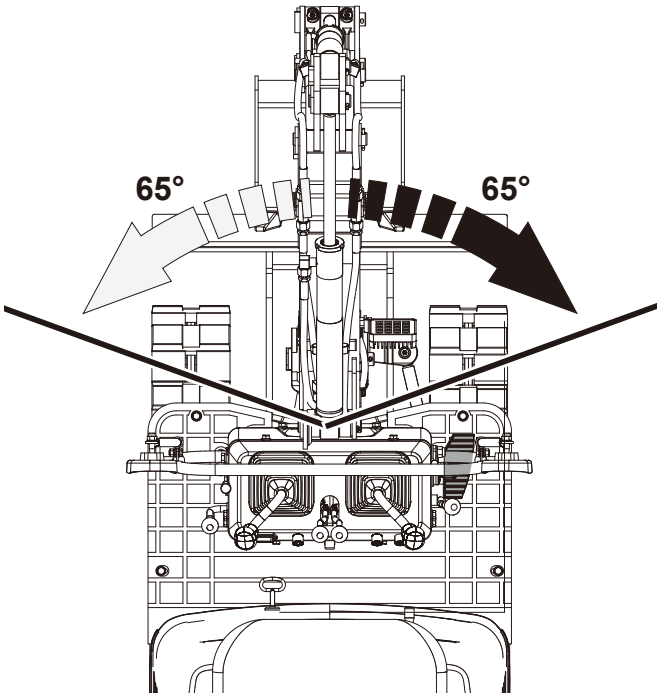

OPERATING THE LEVELLING BLADE

1. To raise the leveling blade, pull the operating lever for the dozer blade to the rear. Push the operating lever forwards to lower the dozer blade.

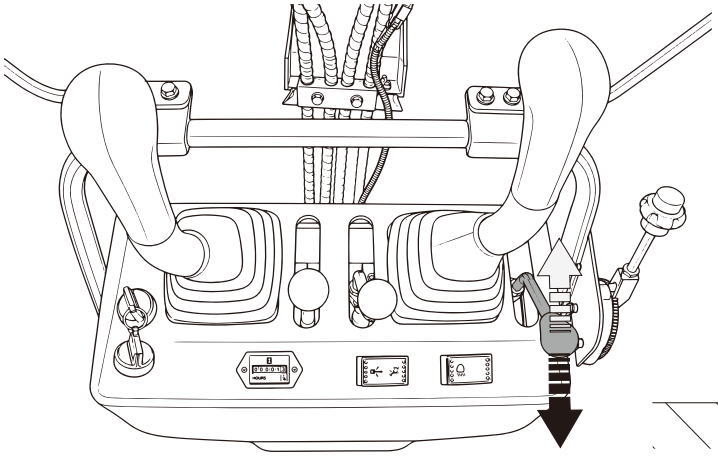

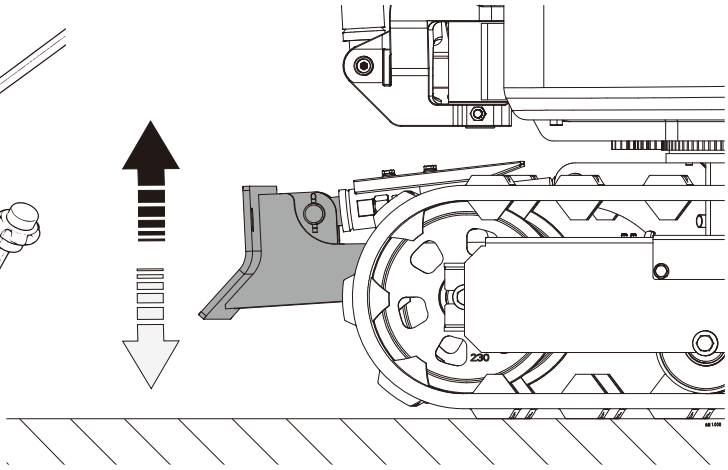

2. Operate both drive levers with your left hand and the control lever for the dozer blade with your right hand during earthworks.

DRIVING

WARNING

Before starting the engine, make sure that there are no other persons in the vicinity of the excavator. Check the direction of the crawlers before working with the excavator. (Idle roller and dozer blade pointing to the front of the excavator.) Avoid driving across a slope or working sideways on it.

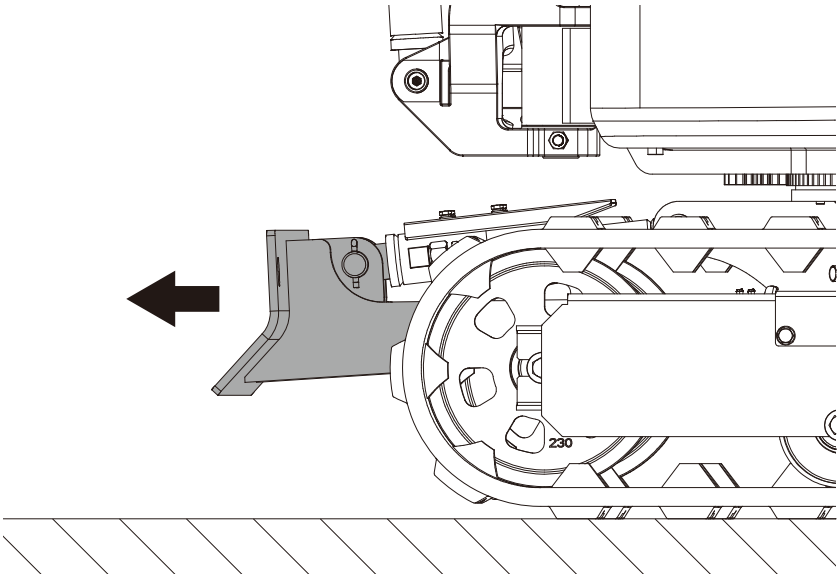

1. Set the engine speed from idling to medium speed.
2. Raise the dozer blade and hold the bucket 8 to 16 in from the ground.

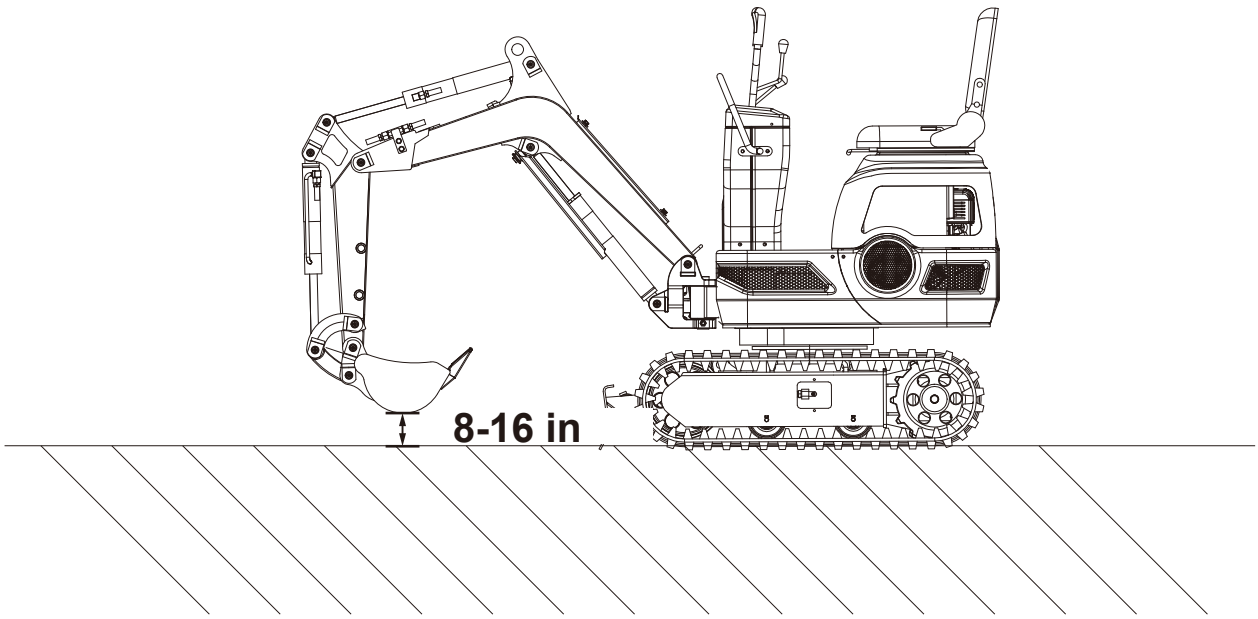

Drive lever (right, left)

WARNING

If the swiveling frame has been rotated by 180°, i.e. it is at the rear from the operator's point of view, the direction of travel is opposite to the direction of travel of the levers. (If the drive lever wards as seen by the operator.)

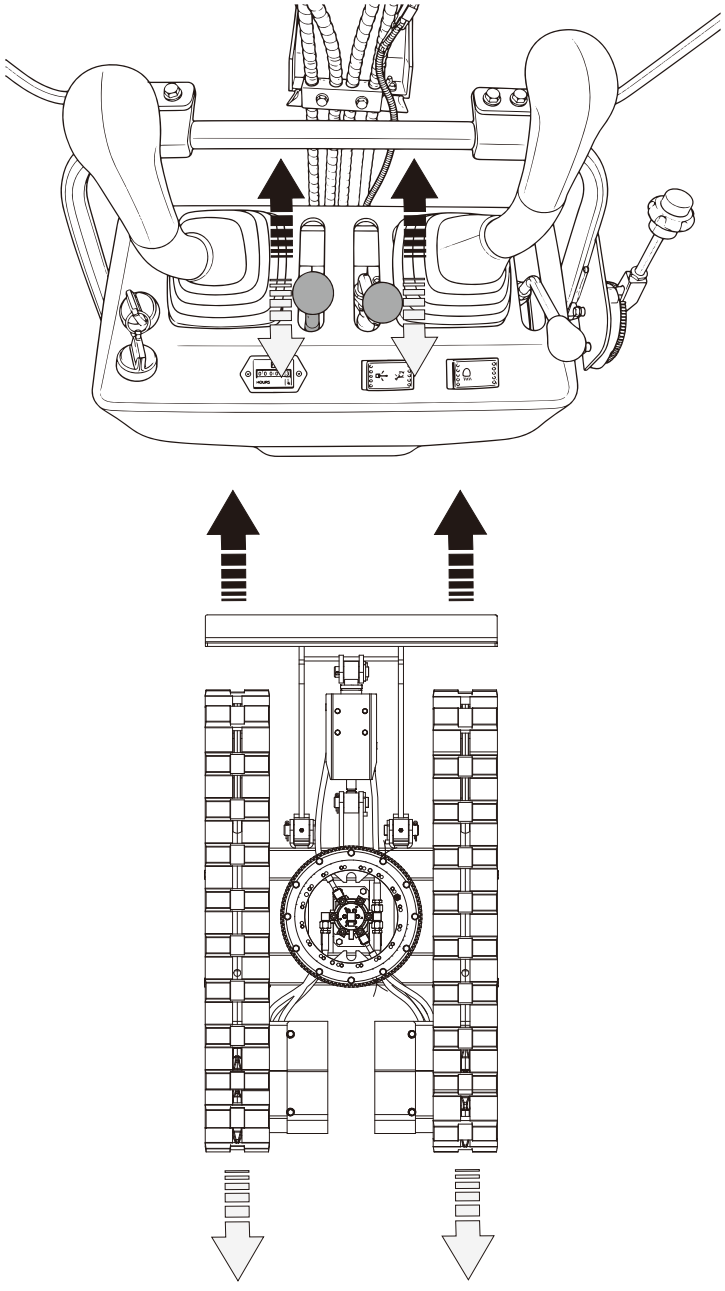

If the drive lever is pushed forwards, the excavator moves forwards and vice versa. The front of the excavator is the side with the dozer blade.

IMPORTANT!

If the crawlers become clogged with sand or stones when working on soft ground, lift a crawler using the boom, arm and bucket and allow the crawler to turn to shake off sand and stones.

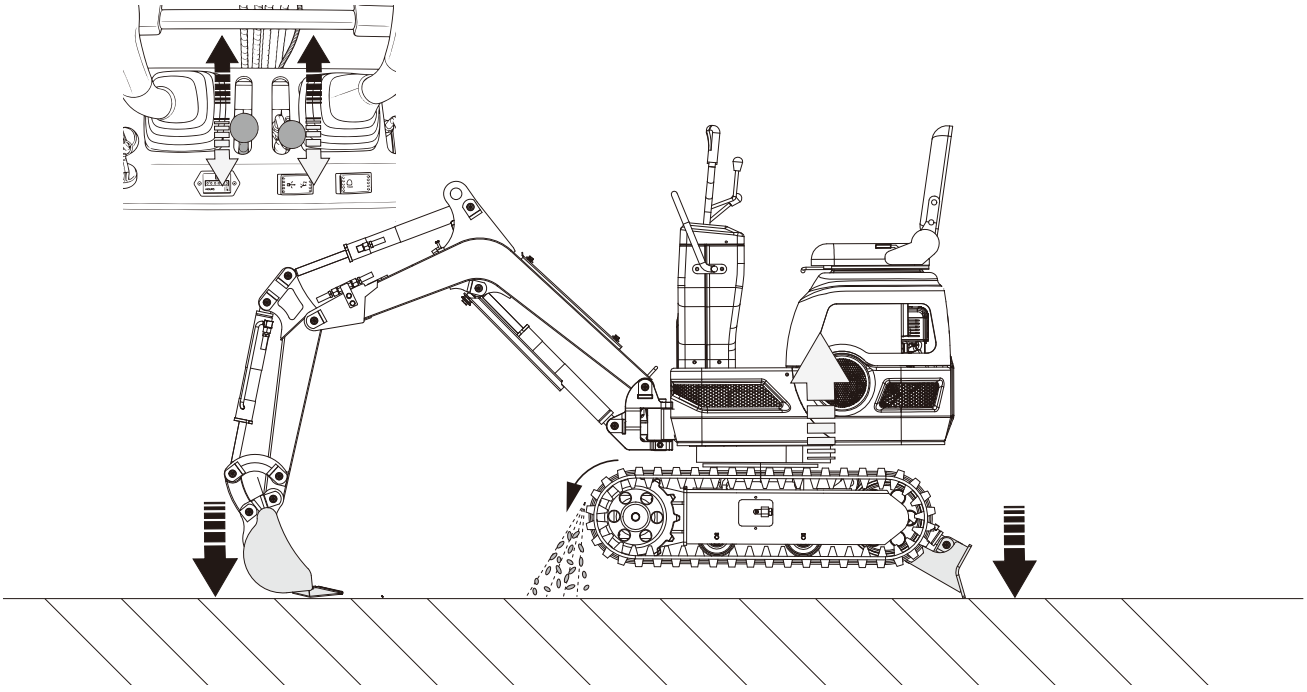

IMPORTANT!

If the excavator gets stuck in the mud while travelling on muddy ground and cannot move, it should be lifted to a safe area using the sling as shown in the illustration below.

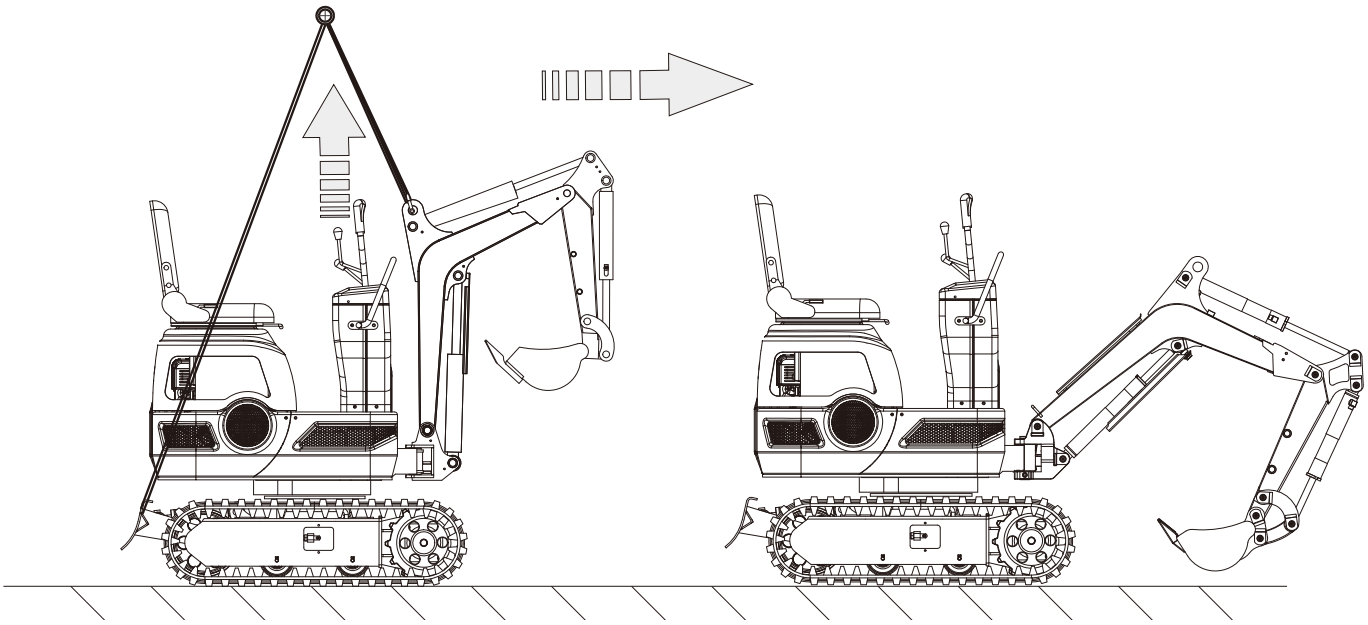

IMPORTANT!

The excavator must not be driven on muddy roads if the swiveling platform is perpendicular to the crawlers. Otherwise the crawlers can get stuck in the mud.

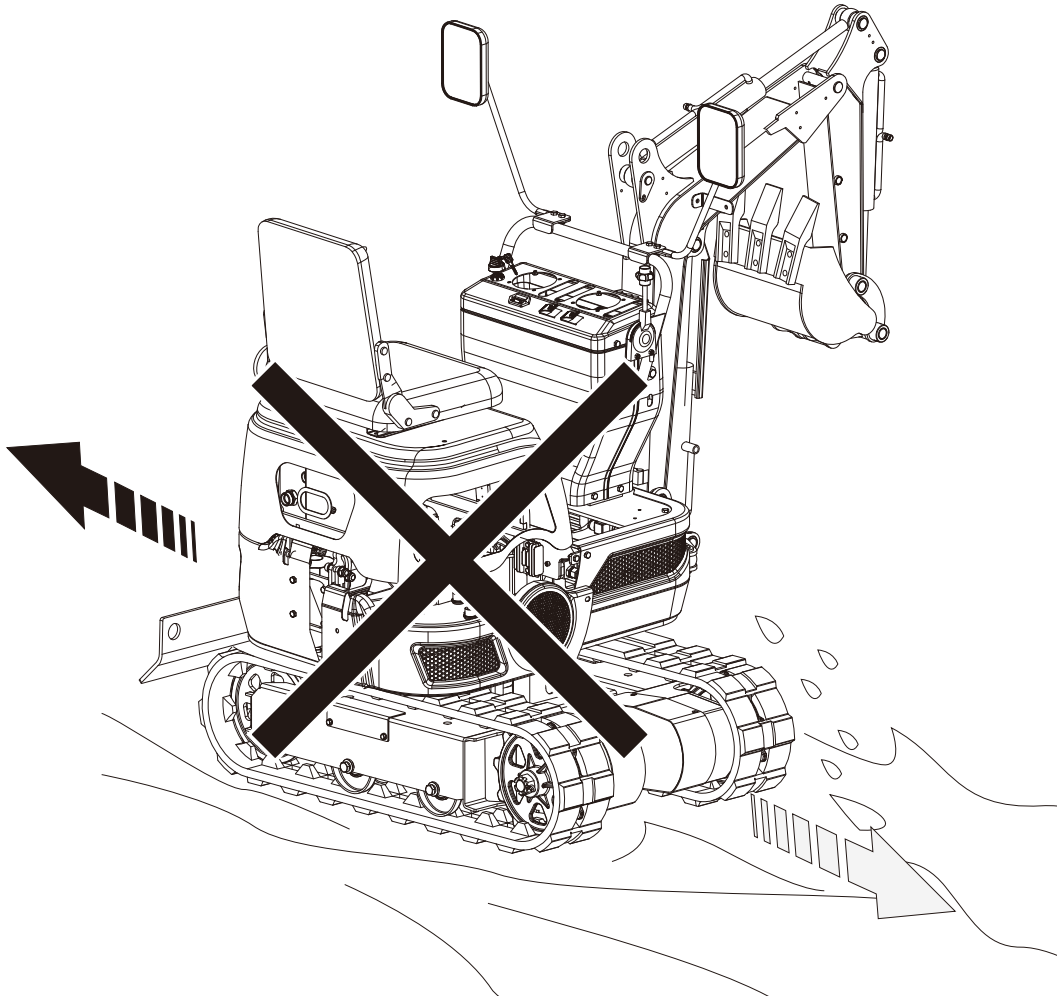

CHANGE OF DIRECTION

CAUTION

Do not change direction on steep slopes. The excavator could topple over. Watch out for people in the work area before changing direction.

TURNING ON THE SPOT

Note:

The illustrated movement shows the turning movement with the dozer blade pointing for wards.

If the dozer blade is facing backwards, the direction of rotation is reversed. (For example, press the left (right) lever forwards and the crawler on the right (left) from the operator's point of view moves backwards towards the operator.)

CHANGING DIRECTION WHILE STATIONARY

1. Push the left drive lever forwards and the excavator turns to the right.

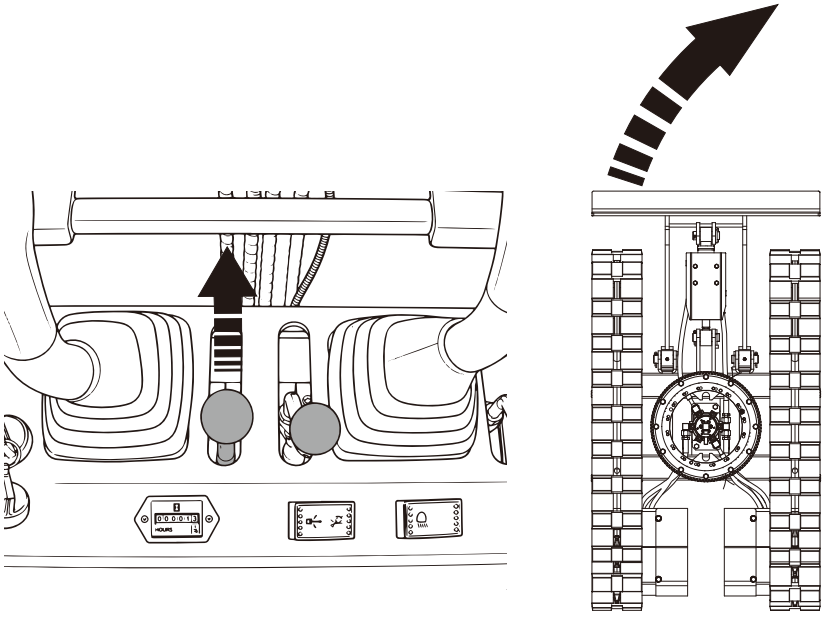

2. Pull the left drive lever backwards and the excavator will turn to the left.

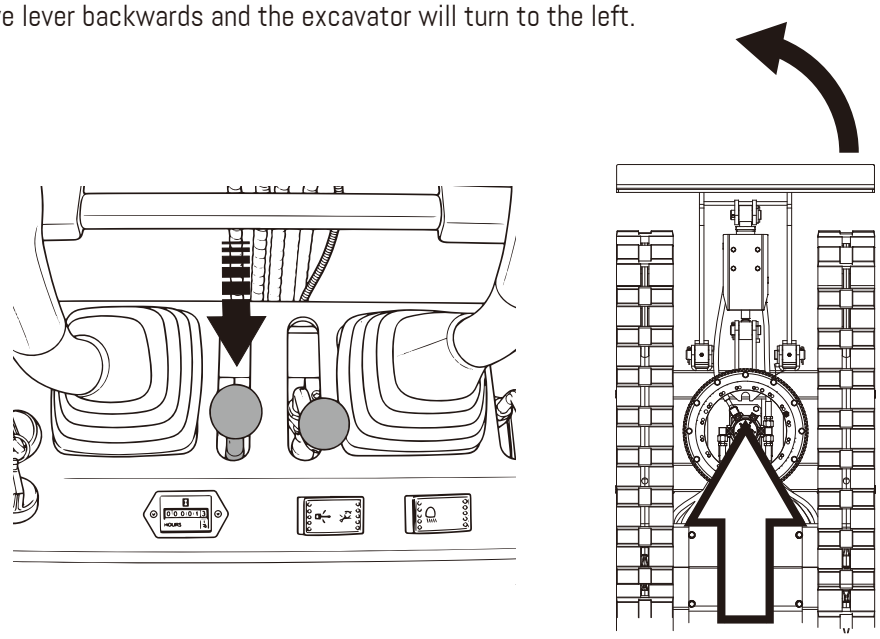

CHANGING DIRECTION WHILE DRIVING

1. When driving forwards, set the left drive lever to the neutral position and the excavator will turn to the left.

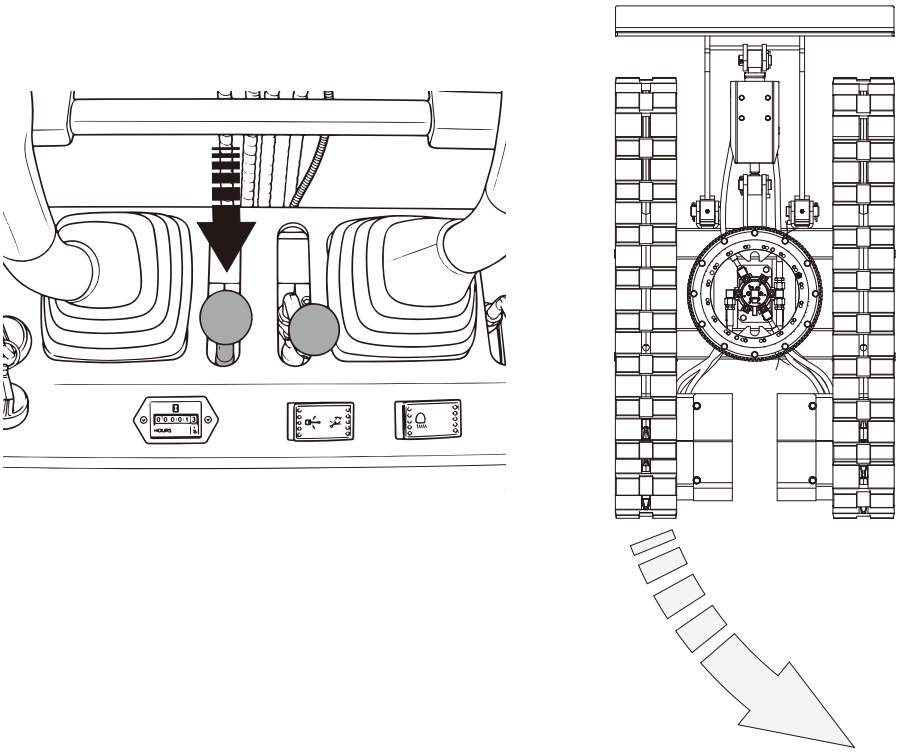

2. When reversing, set the left drive lever to the neutral position and the excavator will turn to the right.

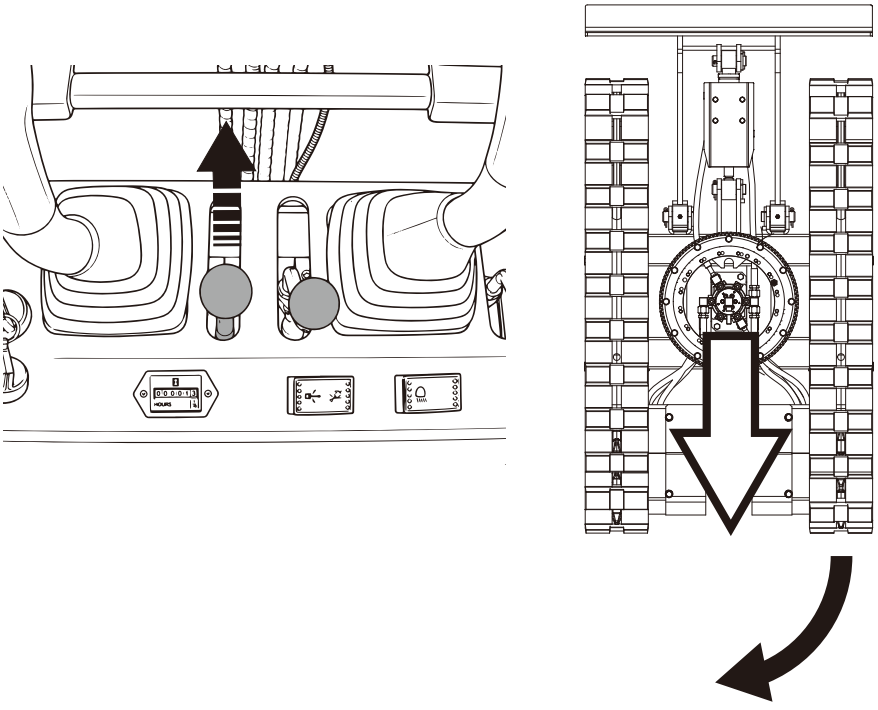

TURNING ON THE SPOT

If both drive levers are activated in opposite directions, both crawlers rotate at the same speed in opposite directions. The axis of rotation is the center of the excavator.

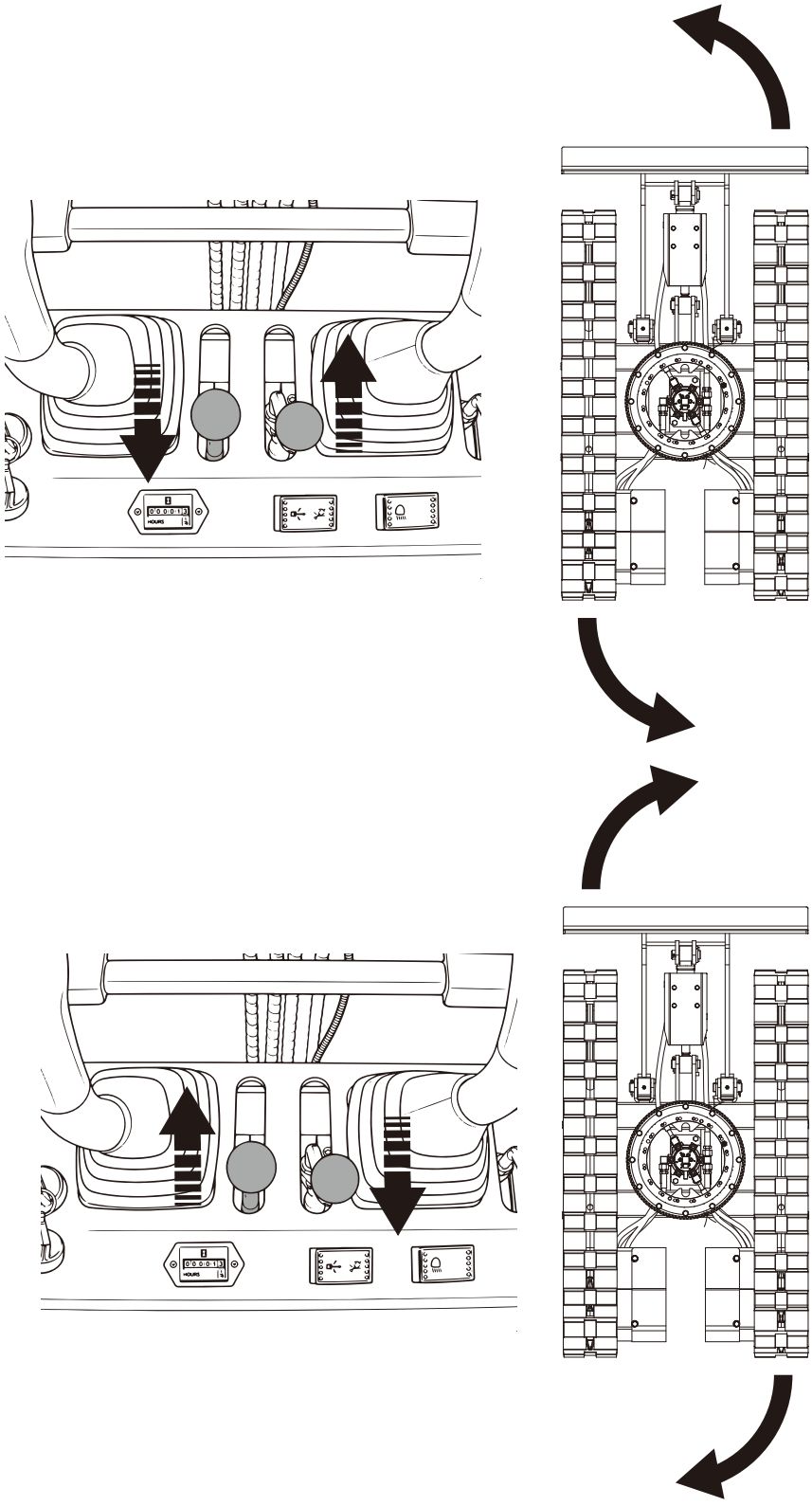

DRIVING UPHILL AND DOWNHILL

When driving uphill, keep the lower edge of the bucket approx. 8 in to 16 in above the ground. Even if the excavator does not slip easily because of the crawlers, it is safer to let the bucket glide over the ground when travelling downhill. Always select a low speed when travelling uphill and downhill.

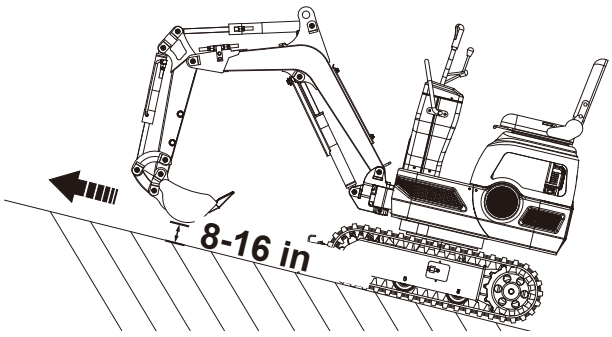

[DRIVING UPHILL]

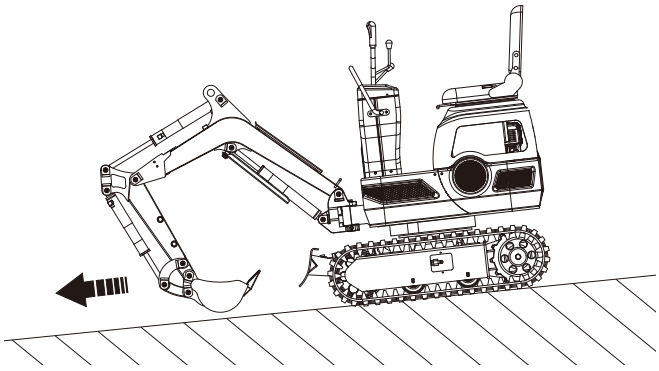

[DRIVING DOWNHILL]

PARKING ON SLOPES

WARNING

If the excavator is parked on a slope or left unattended, place the bucket on the ground and all operating levers in the neutral position. Block the crawlers with wedges.

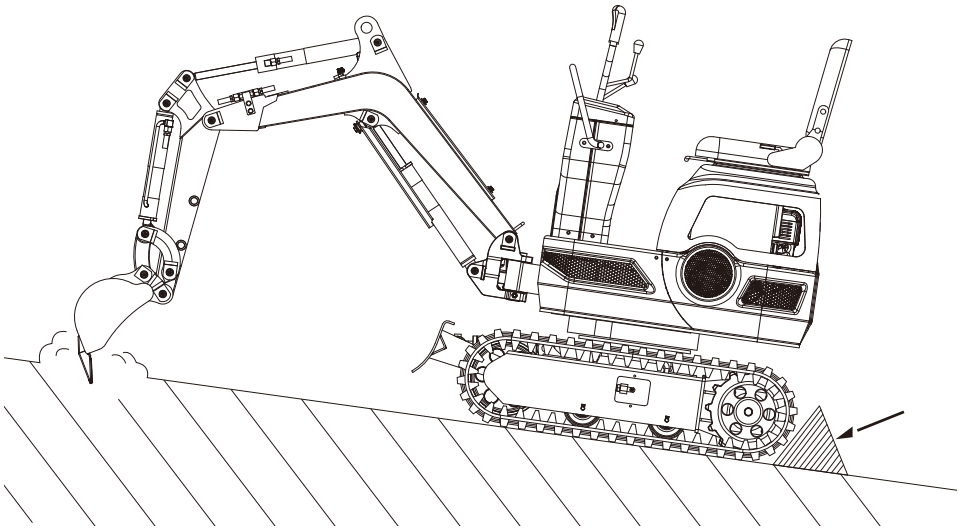

IMPORTANT NOTES ON OPERATING THE EXCAVATOR

CAUTION

Clean the machine after work and lubricate all moving parts. Check the oil level.

IMPORTANT!

Do not attempt to break concrete or rock by swiveling the buckets sideways. Also avoid moving piles of earth by swiveling the bucket sideways. Avoid the following activities at all costs:

- **Lifting by utilizing the machine's gravity.**
- **Compacting gravel or soil by dropping the bucket.**
- **Lifting with the aid of the machine's driving energy.**

Do not attempt to shake off soil adhering to the bucket as explained below. This can damage the machine.

Adhering soil can be shaken off when the bucket is emptied by moving the bucket to the maximum stroke of the cylinder. If this is not enough, extend the arm as far as possible and move the bucket backwards and forwards.

Do not shoot at the dozer blade with the boom cylinder! Ensure that the boom cylinder does not hit the dozer blade when carrying out deep excavation work. If necessary, swivel the upper carriage so that the dozer blade is at the rear of the machine.

Be careful when retracting the bucket! Avoid hitting the dozer blade when retracting the bucket (for driving or transport).

Avoid collisions! When moving the excavator, take care that the dozer blade does not collide with obstacles such as rocks etc.

Such collisions can significantly shorten the service life of the leveling blade and the cylinder.

Support the machine correctly! Lower the dozer blade completely to the base when stabilizing the machine with the leveling blade.

If water or mud reaches over the top of the crawlers, the swivel bearing, the gearbox of the swivel motor and the sprocket can come into contact with mud, water and other foreign bodies.

The excavator must be thoroughly washed with high pressure after each use.

- Thoroughly clean the area around the swivel bearing, the swivel motor gearbox and the gear rim to remove foreign objects.
- Carefully refer to the operator's manual for the correct lubrication procedures for the swivel bearing, swivel motor gearbox and gear rim.
- Reattach the protective cover if it has been removed beforehand.

Preparation for operation in cold weather

1. Replace the engine and hydraulic oil with grades with viscosities suitable for cold weather.

2. If the battery is not sufficiently charged, battery performance will drop in cold weather and the battery may freeze. Make sure that the battery is at least 75% charged after use so that the battery fluid does not freeze. To simplify the next start, we recommend storing the battery in closed or heated rooms.

AFTER COMMISSIONING

- Place the excavator on hard, level ground.
- Lower the attachments and the dozer blade onto the base.
- Switch off the engine.
- Secure all operating levers.
- Remove the key.

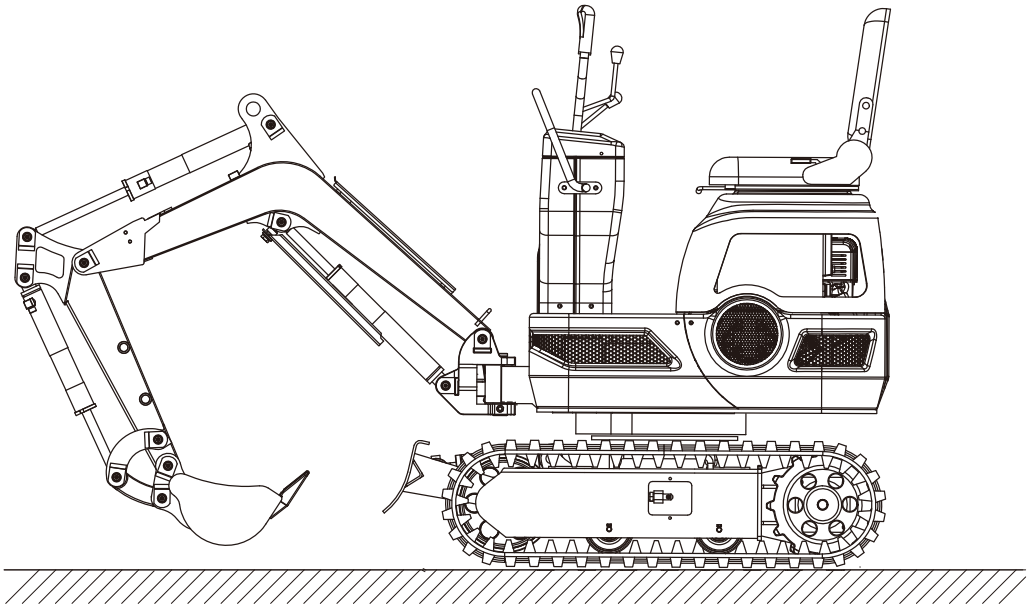

Clean the excavator thoroughly after work and wipe it dry. Otherwise, mud and soil can freeze on the crawlers when the temperature drops below 0°C. Then the excavator cannot be put into operation. Store the excavator in a dry place or on wooden planks or mats if this is not possible. If the excavator is stored on damp or muddy ground, the crawlers may freeze overnight. Then the excavator cannot be put into operation. In addition, the piston rods of the hydraulic cylinders must be rubbed dry. Otherwise, serious damage may occur if dirty water penetrates the seals.

CLEANING

DANGER

Pull out the battery before carrying out any cleaning work.

- **Keep protective devices, air vents and the motor housing as free of dust and dirt as possible. Rub the product clean with a clean cloth or blow it off with compressed air at low pressure.**
- **We recommend that you clean the product directly after every use.**
- **Clean the product at regular intervals using a damp cloth and a little soft soap. Do not use any cleaning products or solvents; they could attack the plastic parts of the product. Make sure that no water can penetrate the interior of the product. Water penetration increases the risk of an electric shock.**

TRANSPORT

1. Observe all regulations regarding the transport of excavators on public roads.

2. Use sufficiently long and stable ramps when loading onto a lorry. (For details, see "TRANSPORTING THE EXCAVATOR ON A LORRY".) The machine can also be lifted onto the lorry. (For details, see “IF TING THE EXCAVATOR”.)

3. Do not change the direction of travel and prevent yourself from overturning. Therefore, do not attempt to swivel the attachment across the loading ramps.

4. Swivel the upper carriage to the rear of the lorry Lower the attachment onto the loading surface, release the pressure from the hydraulic system and secure the boom with the lever. Block the crawlers with blocks and tie down the excavator. After loading the excavator, lash the chassis of the excavator to the lorry with a strong steel cable.

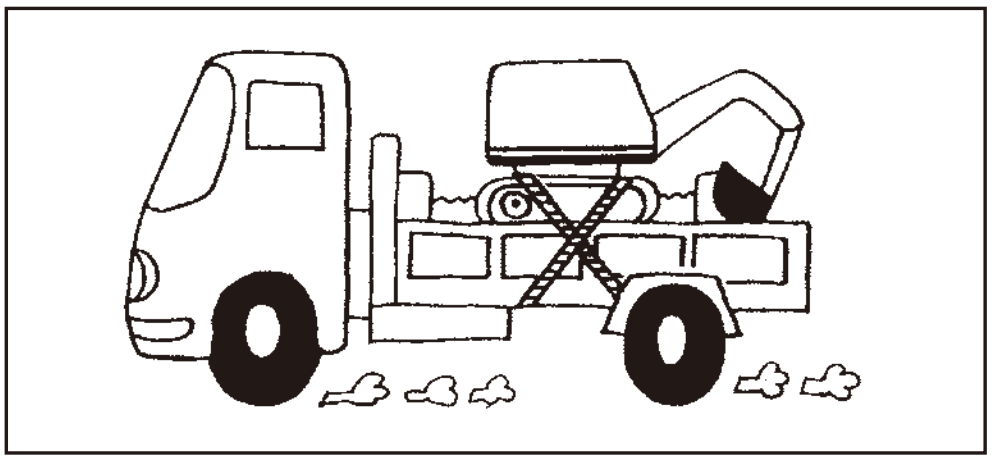

5. Do not brake abruptly when the excavator is loaded. Fatal accidents could occur.

TRANSPORTING THE EXCAVATOR ON A LORRY

DANGER

Do not change direction when the excavator is on the ramp. If a change of direction is required, drive off the ramp completely and change direction.

DANGER

If driving forwards or backwards onto the lorry or if you swivel the upper carriage, make sure that neither the cab nor the side walls of the lorry are damaged.

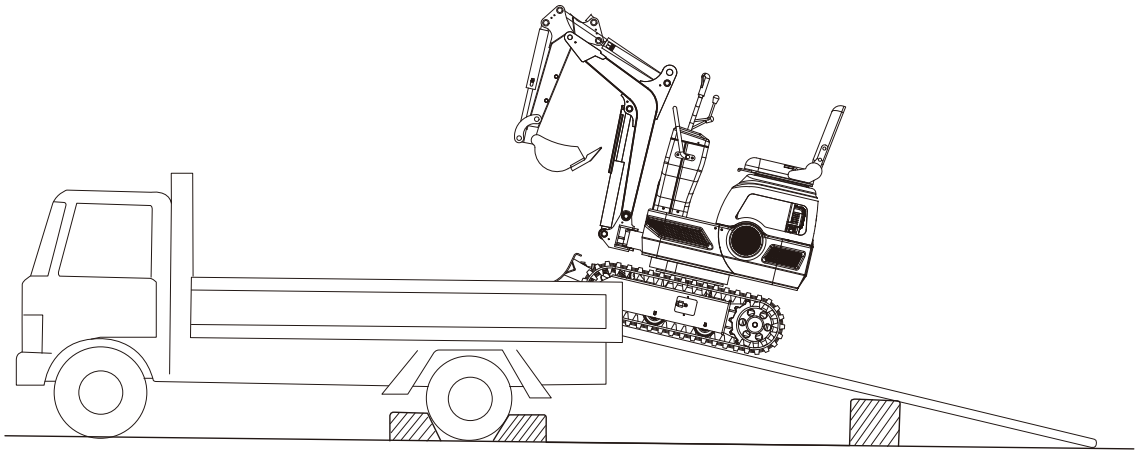

DANGER

When the excavator reaches the point between the ramps and the loading surface of the lorry, stop and drive very slowly until the excavator is in a horizontal position.

DANGER

Only move the excavator onto the lorry with the arm fully retracted. Otherwise, the cab of the lorry could be damaged if the upper carriage is swiveled around.

DANGER

Do not lift the machine with the boom to load or unload the excavator onto the lorry. This could lead to hazardous situations.

WARNING

Lower the bucket and dozer blade onto the loading surface of the lorry after the machine has been loaded onto the lorry. Secure the swivel frame with the swiveling locking pin.

Prepare a platform for loading or unloading the excavator. Proceed as follows when using ramps:

1. Activate the lorry's parking brakes and block the drive wheels from both sides.

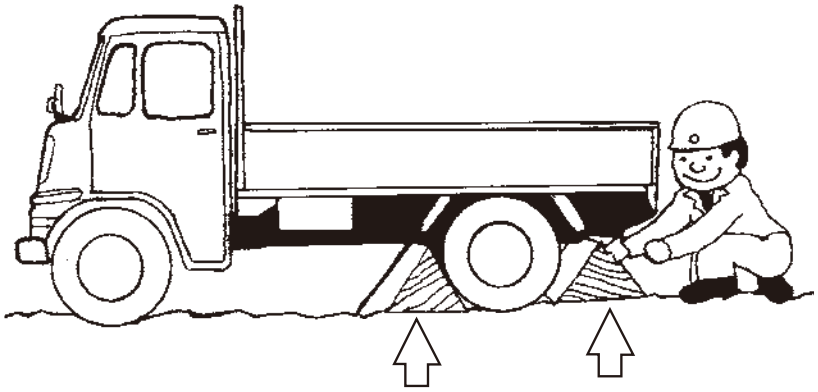

2. Use mounting plates to secure the ramp properly. Attach the ramps directly to the loading surface of the lorry.

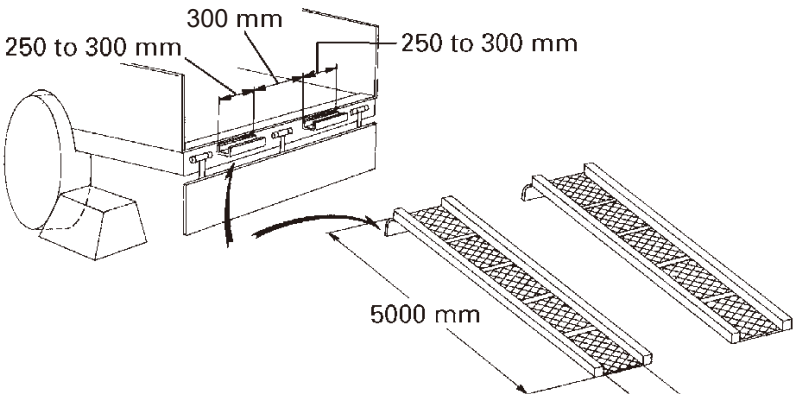

3. Use blocks or struts under the ramps and on the loading surface for additional safety.

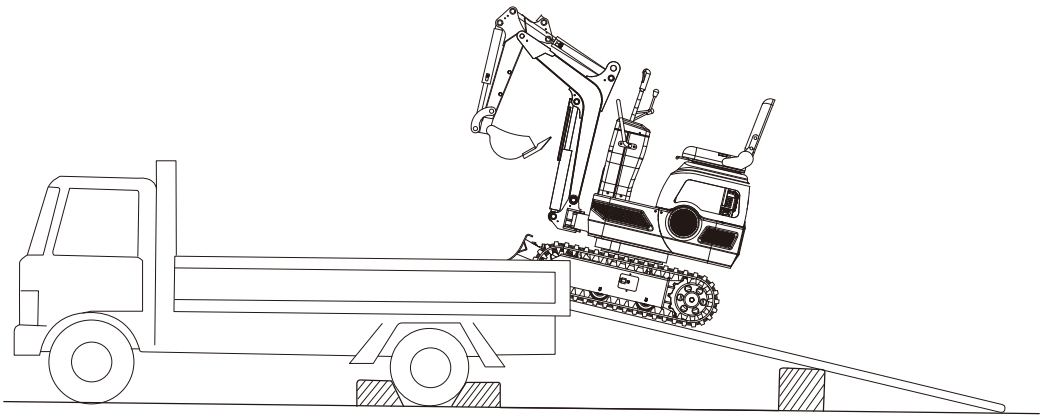

4. Align the ramps and crawlers completely and then drive the excavator slowly up the ramps with the dozer blade facing forwards. Swivel the upper carriage towards the rear of the truck when the crawlers are completely on the loading surface of the lorry.

5. Block the crawlers and lash down the excavator.

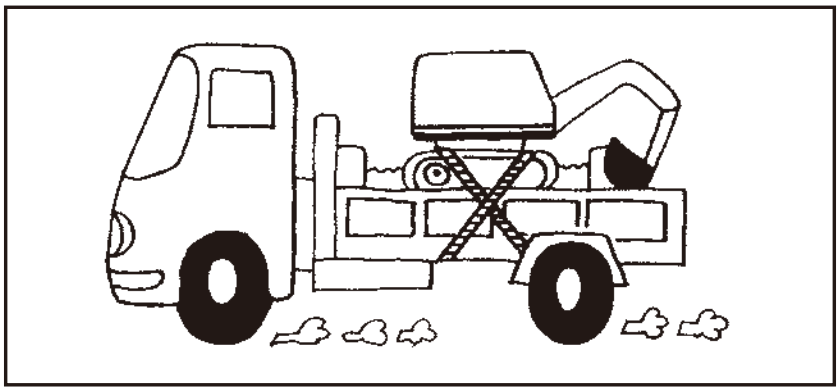

6. Before unloading, remove the locking pin and then lift the dozer blade and bucket off the loading surface.

LIFTING THE EXCAVATOR

DANGER

The correct instructions for safe handling can be found here. Read these carefully before moving the machine. Ensure that the operating personnel read the operator's manual carefully.

Basics for lifting with chains/belts:

1. The crane is lifted and operated in accordance with the guidelines described.

2. As the tools mentioned in this manual are for reference only, the standards regarding strength, control and other details are based on the respective applicable guidelines.

Safety aspects when lifting with chains/belts:

1. Do not lift any loads if this exceeds the maximum load capacity of the crane.

2. Select the correct rigging for the weight, size and shape of the load.

3. First determine the center of gravity of the load, position the hook directly above the load and lift the load so that the center of gravity of the load is as low as possible.

4. Steel cables must be fastened in the center of the hook.

5. The load must be lifted vertically from the ground.

6. Do not enter the work area under suspended loads and do not move the load over other people. The load must be moved in an area where the balance can be easily equalized.

General guidelines for lifting:

WARNING

Only lift the excavator at the 3 points shown.

Lifting position (see figure below)

1. Pull the boom fully backwards.

2. Fully retract the arm.

3. Fully retract the bucket.

4. Swivel the boom to the center position.

5. Swivel the upper carriage 180° to ensure that the dozer blade is at the rear as seen by the operator. 6. Insert the swiveling locking pin.

Fastening the chains/straps.

1. Always hook the excavator in at three points (on the boom and to the right and left of the dozer blade).

WARNING

The dozer blade must be raised.

2. When attaching the straps, use a shackle at each stroke opening.
3. Use padding materials where the belts touch the machine.

Tackle

Use components of sufficient strength.

Lifting

1. Lift slowly and safely.
2. Do not climb onto the excavator when lifting it.
3. Lift the excavator horizontally. (Change the connections as required).

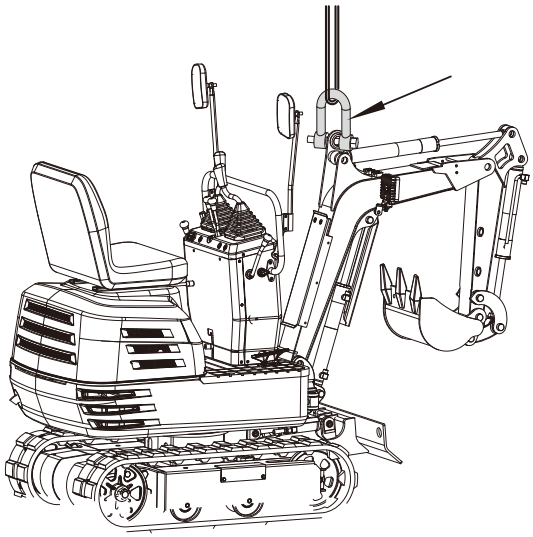

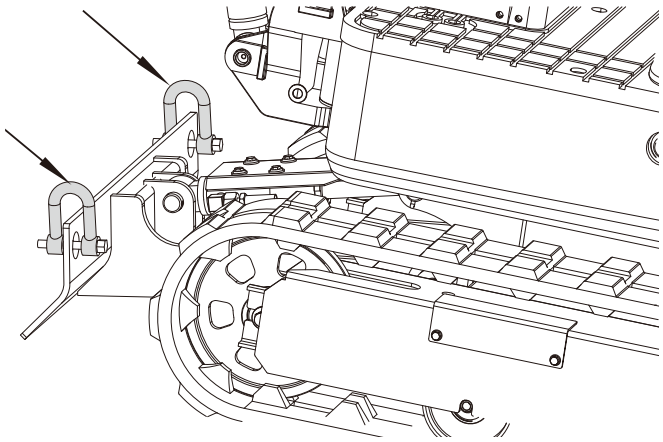

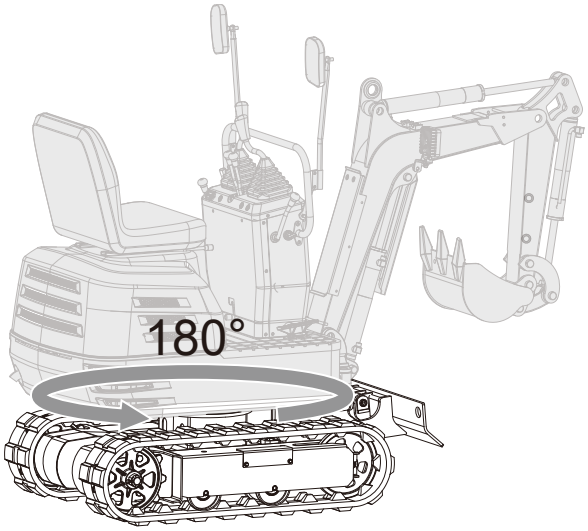

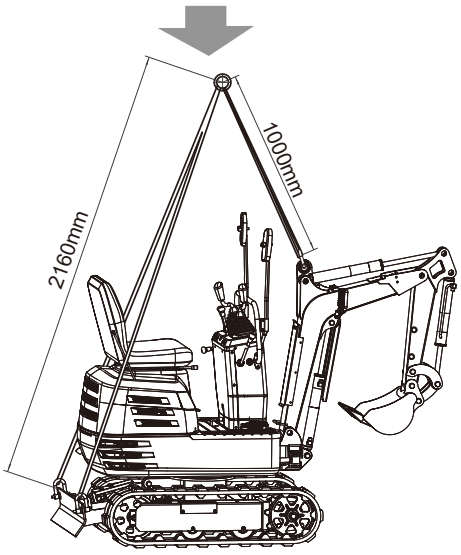

STORAGE

CAUTION

Do not clean the excavator with the engine running.

CAUTION

To avoid the risk of exhaust poisoning, do not run the engine in a closed building without good ventilation.

CAUTION

Remove the key from the ignition lock during storage to prevent unauthorized persons from operating the excavator and injuring themselves.

Observe the following sequences if the excavator is to be stored for an extended period:

1. The entire excavator should be thoroughly cleaned and stored indoors. If the excavator has to be stored outdoors, lay out wooden planks on a level surface, place the excavator on them and cover it completely.
2. Change the oil and lubricate the excavator.
3. Lubricate the visible sections of the piston rods particularly well.
4. Remove the battery and store it indoors.

IMPORTANT!

Wash the excavator with the engine switched off. If you wash the excavator while the engine is running, water can enter the air filter through the inlet and cause engine problems. Wash the excavator carefully to avoid splashing water over the air filter.

Follow the procedures below if the machine is to be put into operation after a long period of storage.

1. Wipe the grease off the hydraulic cylinder rods.
2. Switch on the engine and activate the attachments and the drive mechanism without load to allow the hydraulic oil to circulate. (If the machine is stored for longer than one month, carry out steps (1) and (2) every month.)

MAINTENANCE

Place the machine on a level, firm surface before starting maintenance work. Lower the attachments to the ground, stop the engine and release the cylinder pressure by operating the levers. When dismantling hydraulic parts, ensure that the hydraulic oil has cooled down sufficiently to prevent burns. Start the maintenance work carefully, i.e. loosen the screws slowly so that no oil splashes out.

1. Allow the excavator to cool down sufficiently before working on the engine, the exhaust system, the heat protection system and the hydraulics.

2. Always switch off the engine when filling it with petrol. Avoid spilling and overfilling with petrol.

3. Smoking is prohibited when refueling and handling the battery! Keep sparks and fire away from the fuel tank and battery. Flammable gases escape from the battery.

4. If the battery is empty, the machine can be started by pulling the cable.

5. Avoid short-circuiting the battery. Always remove the earth cable first and connect the positive cable first.

6. Have a first aid kit and a fire extinguisher ready at all times.

7. Leaking hydraulic fluid has sufficient pressure to penetrate the skin and cause serious injury. Leaks from tiny holes can be completely invisible. Never check for possible leaks with your bare hands. Always use a piece of wood or cardboard. We recommend the use of a face mask or eye protection. If injuries occur due to leaking hydraulic fluid, contact a doctor immediately. This liquid can cause gangrene or severe allergic reactions.



8. Do not throw the battery away to prevent battery fluid containing heavy metals from leaking out.

9. Observe all laws and regulations regarding the disposal of used oil, coolants, solvents, hydraulic fluids, battery acid and batteries.

10. To prevent fires, do not heat up the hydraulic components (tanks, pipes, hoses, cylinders) until they have been rinsed and washed.

11. Use a face mask or eye protection to protect the eyes and respiratory tract from dust and other foreign bodies.

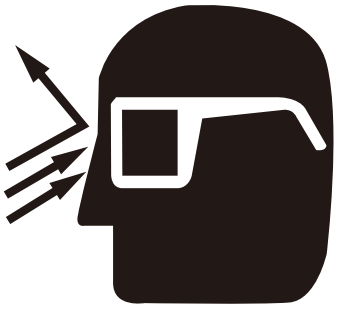

12. Do not crawl under the excavator if it is only supported by the boom and arm or the dozer blade. The excavator can tip over or sink due to loss of pressure in the hydraulics. Always use safety struts or other suitable supports.

13. Do not use any parts that are lined with asbestos. Do not use these types of parts even if they can be installed.

14. Fire protection. The excavator and some attachments contain components that are very hot under normal working conditions. The main source of high temperatures is the engine and the exhaust system. The electrical system can be a source of sparks and flashover if damaged or improperly maintained. The following fire safety guidelines will help you to keep your devices running efficiently and minimize the risk of fire.

15. Blow off any accumulations of foreign matter near the hot engine exhaust components such as the petrol engine cylinder head and exhaust manifold as well as the exhaust pipe and silencer more frequently if you are working in difficult conditions.

16. Remove all flammable debris such as leaves, straw, pine needles, twigs, bark, small wood chips and other flammable materials from inside the machine's protrusions and lower structures and areas near the engine.

17. Inspect all petrol and hydraulic lines for wear or poor condition. Replace them immediately if they start to leak.

18. Check the electrical cables and connections regularly for damage. Repair any loose or frayed cables before commissioning the machine. Clean all electrical connections and tighten them if necessary.

19. Check the exhaust system daily for signs of leaks. Check for broken pipes and silencers as well as loose or missing screws, nuts and clamps. If leaks or broken parts of the exhaust system are found, the repairs must be carried out before commissioning.

20. Always keep a multi-purpose fire extinguisher on or near the machine. Familiarise yourself with the operation of the fire extinguisher.

Maintenance intervals

Components	Measure	Operating hours													
		50	100	150	200	250	300	350	400	450	500	550	600	1000	2000
Fuel	Check	Daily													
Engine oil	Check	Daily													
	Change	x	x	x	x	x	x	x	x	x	x	x	x	x	x
Hydraulic oil	Check	Daily													
	Change													x	x
Lubrication points	Check	Daily													
Fan wheel	Check	Daily													
Electric cabling	Check	Daily													
Air cylinder, fan wheel	Clean	Daily													
Machine	Clean	Daily													
Battery	Check	x	x	x	x	x	x	x	x	x	x	x	x	x	x
Lubrication of the swivel bearing teeth	Check	x	x	x	x	x	x	x	x	x	x	x	x	x	x
Air filter element **	Cleaning	x	x	x	x	x	x	x	x	x	x	x	x	x	x
	Change				x				x				x	x	x
Swivel bearing lubrication	Check		x		x		x		x		x		x	x	x
Fuel line and hoses	Check				x				x				x	x	x
	Change	Every 2 years													
Hydraulic return filter	Change													x	x
Hydraulic suction filter	Change													x	x
Spark plug	Check	x	x	x	x	x	x	x	x	x	x	x	x	x	x
	Change											x		x	x

** Clean the air filter element more often if the machine is operated in dusty conditions.

OPENING AND CLOSING OF COMPONENTS

Opening/closing the bonnet

CAUTION

Do not open the bonnet until you have switched off the engine.

CAUTION

Do not touch the silencer or the exhaust pipe, as this can cause serious burns.

Turn the key in the direction of the arrow as shown in the figure below to open the bonnet.

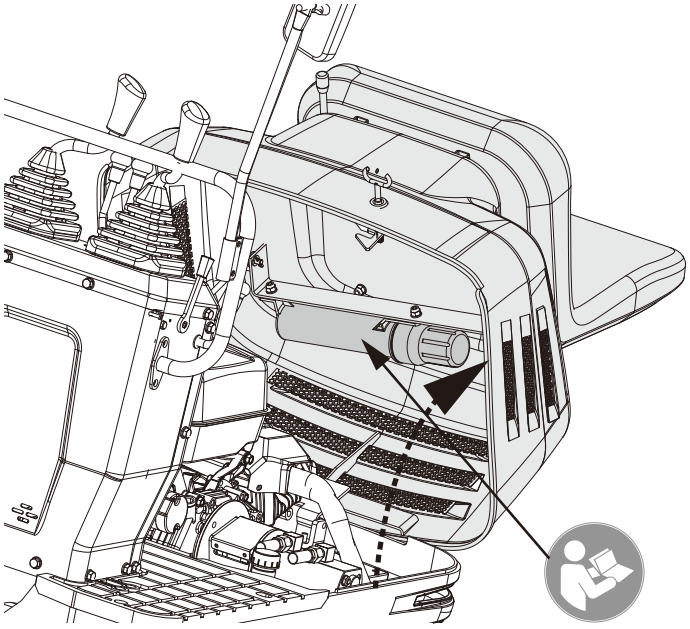

Keep the tools and the operator's manual in the manual storage area.

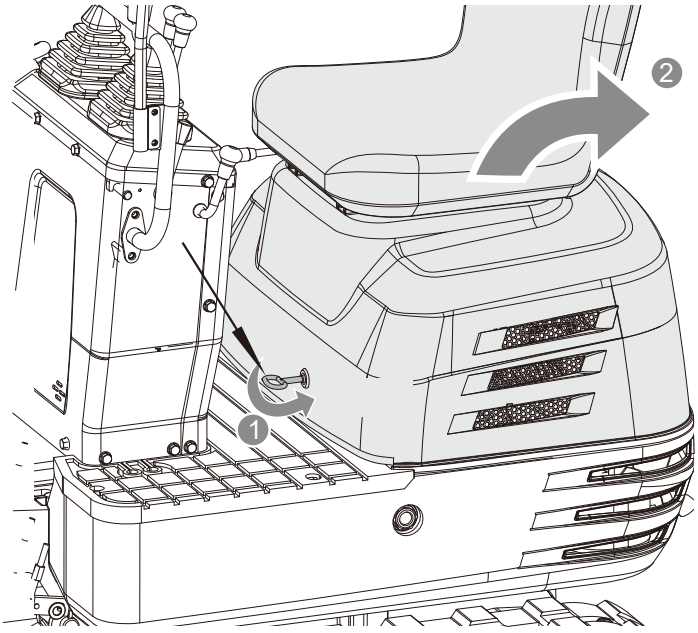

DAILY CHECKS

For your own safety and to ensure a long service life of the machine, careful inspections should be carried out before each use.

Checking the petrol level

CAUTION

Switch off the engine before filling with petrol.

CAUTION

Do not smoke when filling with petrol.

IMPORTANT!

Use unleaded petrol with an octane rating of 86 or higher.

1. Check the fill level in the fuel tank.
2. Open the fuel filler cap and top up with petrol. To do so, use a commercially available funnel.

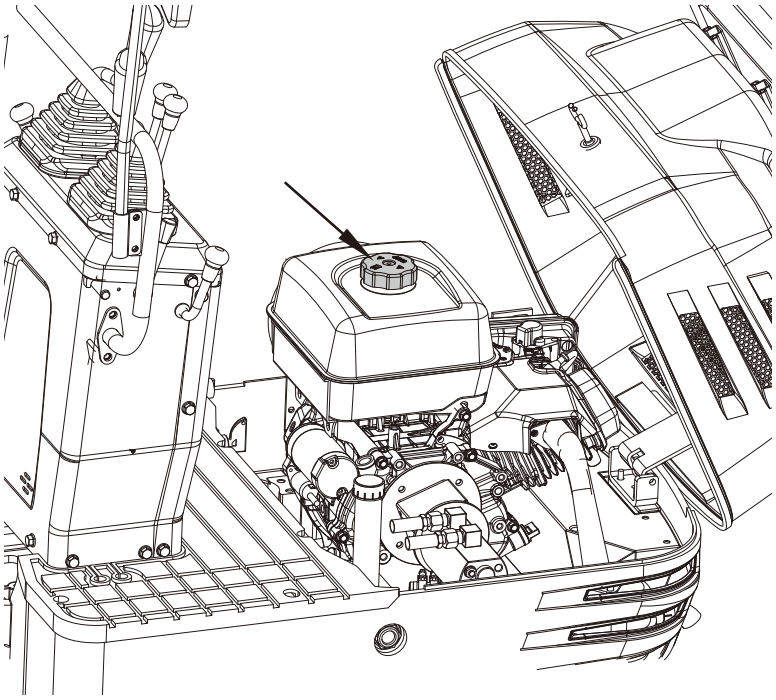

Tank Capacity: 1.6 gal

IMPORTANT!

Always top up with petrol after a working day.

IMPORTANT!

See "FLUSHING THE FUEL SYSTEM" in "OTHER SETTINGS AND EXCHANGES".

IMPORTANT!

The fuel filler cap has a vent. Make sure that you clean the ventilation when you top up with petrol.

If the vent is clogged with sludge, negative pressure is created in the fuel tank.

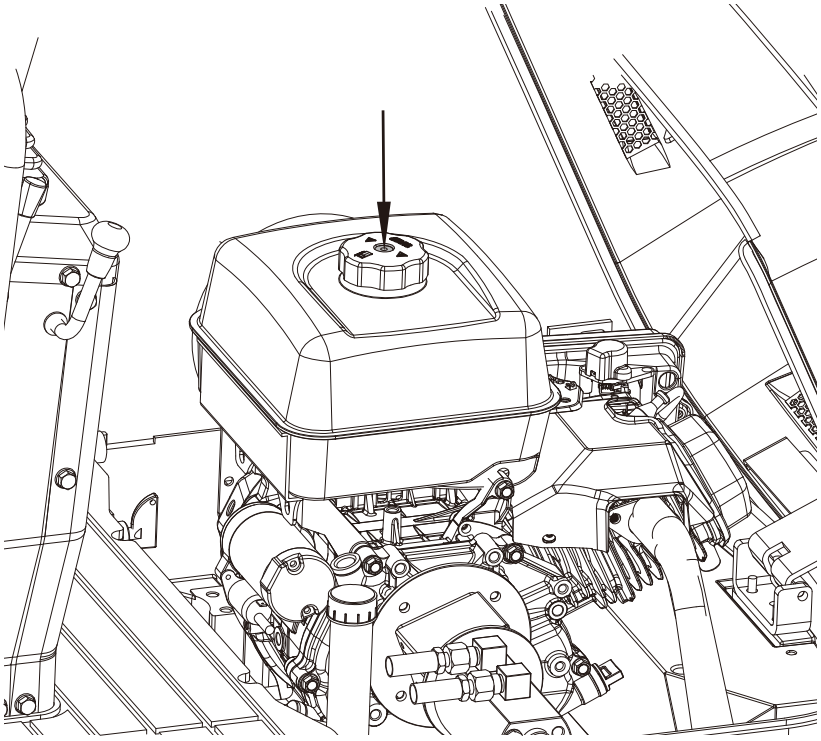

Draining water or air from the fuel tank

DANGER

Always keep away from flames when draining water or air from the fuel tank.

If the petrol engine is not used for a longer period of time, the engine may have starting problems. Proceed as follows:

1. Shut the petrol valve.

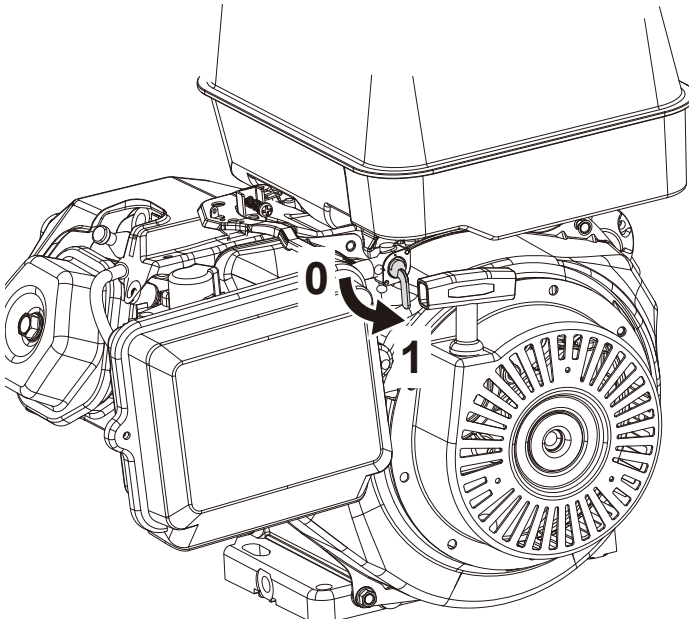

2. Unscrew the screw at the carburetor vent outlet to drain the water or gas from the petrol.
3. Tighten the screw on the carburetor vent outlet.
4. Shut the petrol valve.
5. Start the engine.

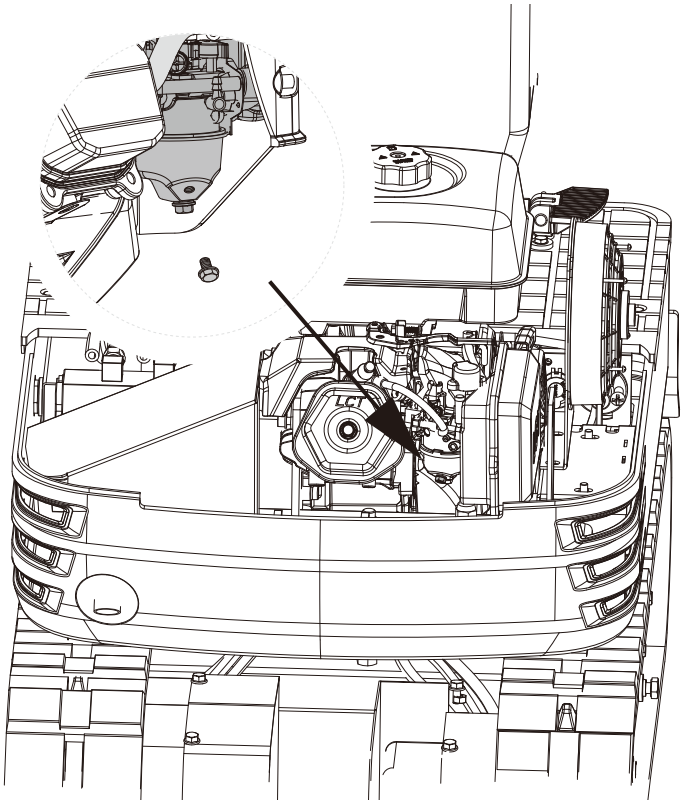

Checking the engine oil level

CAUTION

Switch off the engine before checking the oil level.

Insert the dipstick fully into the opening provided, remove it and check the oil level. Top up with oil if necessary. The machine must be on level ground when checking the oil level.

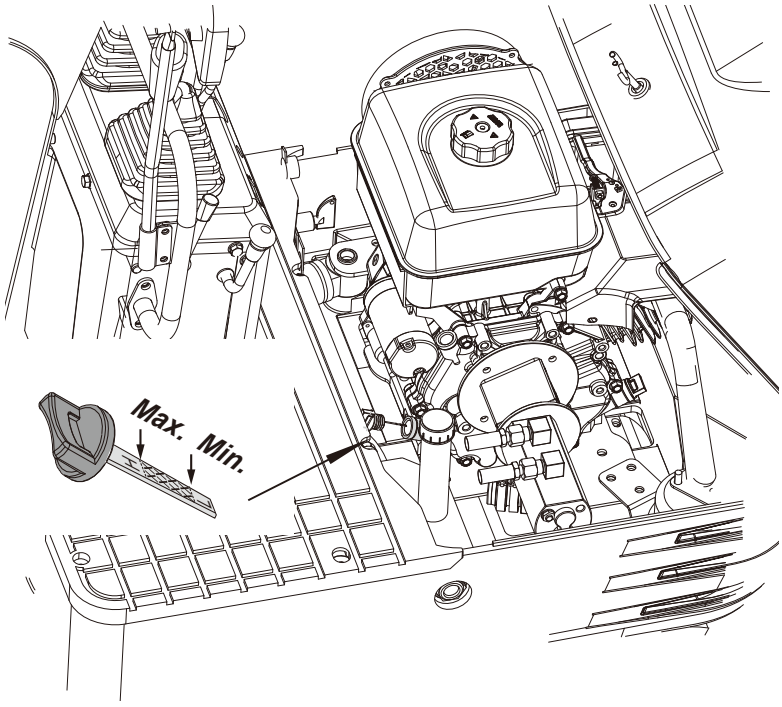

IMPORTANT!

Use engine oil with the correct viscosity (according to the outside temperature).

IMPORTANT!

Wait five minutes after stopping the engine and then check the oil level. (The excavator must be on level ground.)

Checking the hydraulic oil level

CAUTION

First lower all attachments to the ground and then switch off the engine.

IMPORTANT!

Wipe away sand and dust in the area of the oil filler opening before topping up the oil. Make sure that you use the same type of hydraulic fluid.

IMPORTANT!

The excavator was filled with hydraulic fluid before delivery. See "RECOMMENDED OIL TYPES". (Different brands must not be mixed!)

1. Move the excavator on level ground. Extend all cylinder rods to their center position and place the bucket on the ground.
2. Check whether the oil level is at the center mark at a normal temperature of 10 °C to 30 °C.
3. There is sufficient oil if the oil level is between the markings.
4. If the oil level is too low, add enough oil through the filler opening before starting the engine. This step is important to protect the hydraulic system.

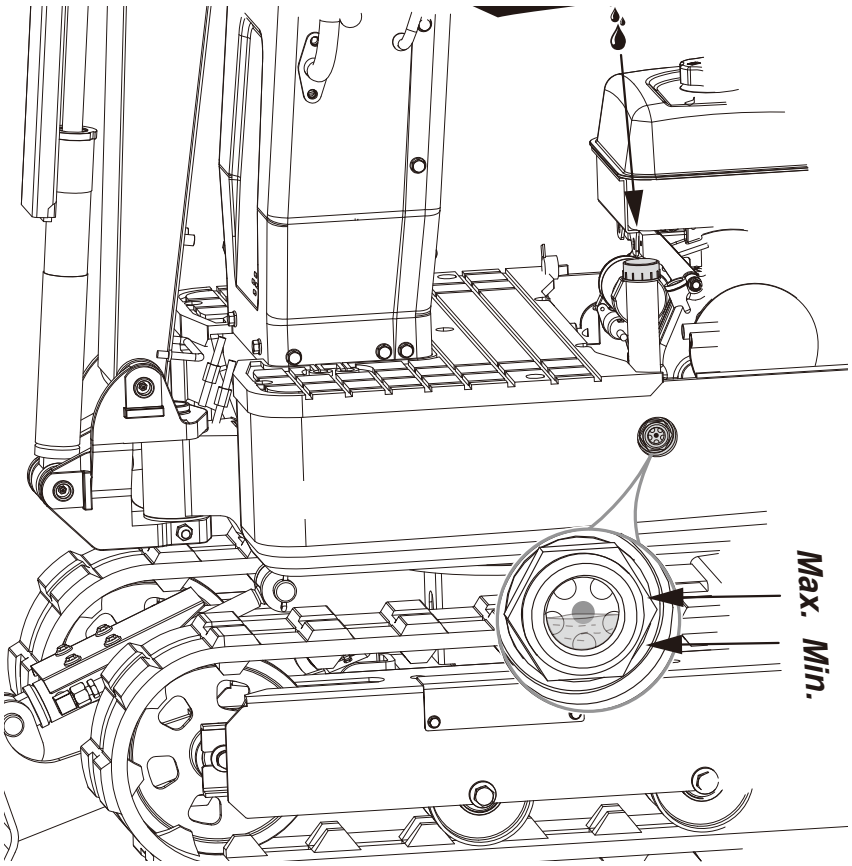

Lubrication points

CAUTION

First lower all attachments to the ground and then switch off the engine.

CAUTION

When lubricating, make sure that you do not stop at the excavator teeth.

CAUTION

Lubricate the following points generously when excavating in water. Lubricate again after completing the work.

Grease the grease nipples marked by the arrows in the figure below:

1. Lower boom joint	1 position
2. Lower arm joint	1 position
3. Hub of the cantilever cylinder	2 positions
4. Hub of the arm cylinder	2 positions
5. Bucket cylinder pin	2 positions
6. Boom swiveling pivot point	1 position
7. Wing cylinder hub	2 positions
8. Dozer blade hinge pin	2 positions
9. Bucket hinge pin	5 positions

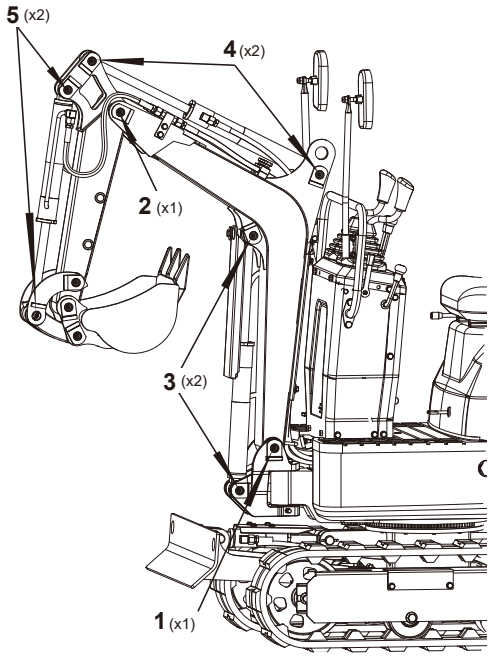

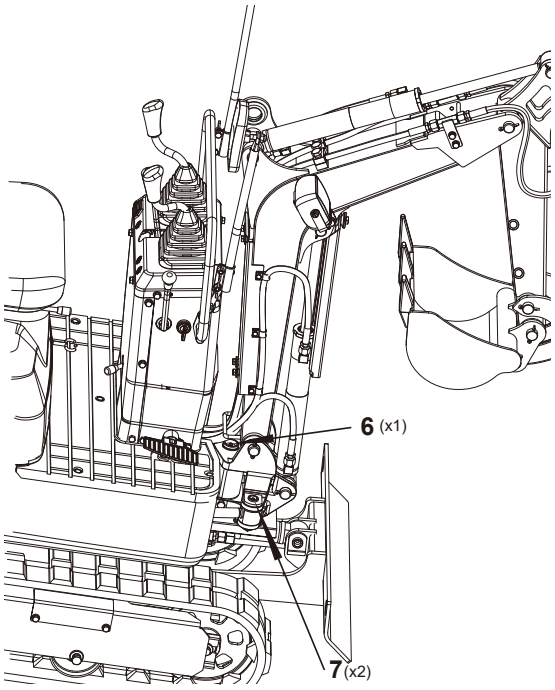

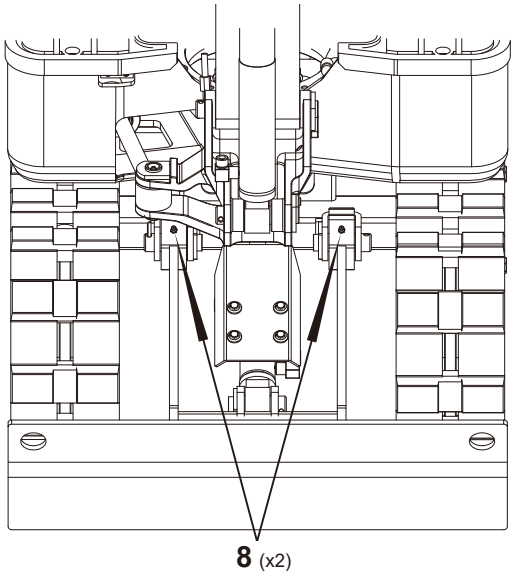

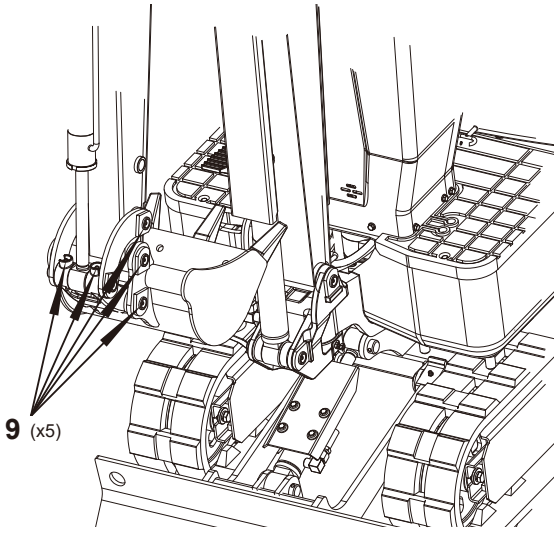

Checking the cooling fan

CAUTION

Always stop the engine before checking the cooling fan.

CAUTION

Wear eye protection when cleaning with compressed air.

1. Check the cooling fan for normal operation more frequently in warm weather. Check for dust on the cooling fan of the petrol engine cylinder head. Please clean large accumulations of dust with compressed air.

2. Check whether the exhaust silencer and the cladding are oxidized. Check whether the insulation layer of the exhaust silencer cladding is complete.

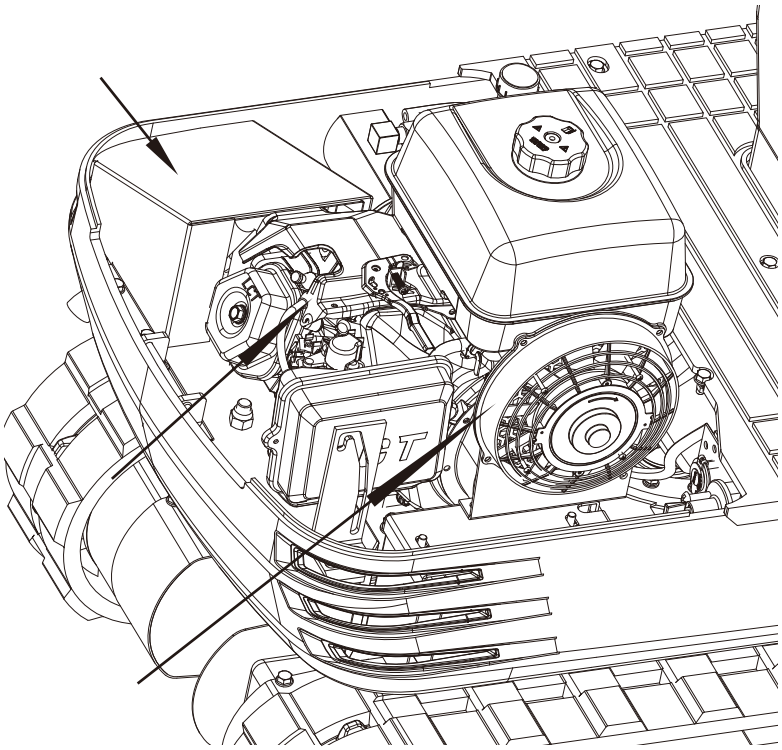

IMPORTANT!

The cooling fan must be clean so that the engine does not overheat and free ventilation of the system is possible.

Cleaning the engine and electrical cables

CAUTION

Always stop the engine before cleaning the cabling, lines and engine.

Before starting the engine, check whether flammable substances have accumulated on the battery, the cables and lines, the exhaust silencer or the engine. Remove these thoroughly.

Testing the electrical circuit

Check the electrical circuit for loose connections, short circuits or loosened connections.

Washing the whole machine

Check the electrical circuit for loose connections, short circuits or loosened connections.

IMPORTANT!

Do not wash the excavator with the engine running. Water could penetrate the air filter and damage the engine. Make sure that the air filter remains dry.

Regular checks and maintenance work

Every 50 operating hours:

Change the engine oil

CAUTION

First switch off the engine and wait until the oil has cooled down.

1. Remove the drain plug from the underside of the engine and drain the oil completely. Important! Place a suitable container under the engine to collect the used oil. Dispose of used engine oil in accordance with local legislation. We recommend taking it to your local recycling center or petrol station in a sealed container for recycling.
2. Retighten the drain plug.

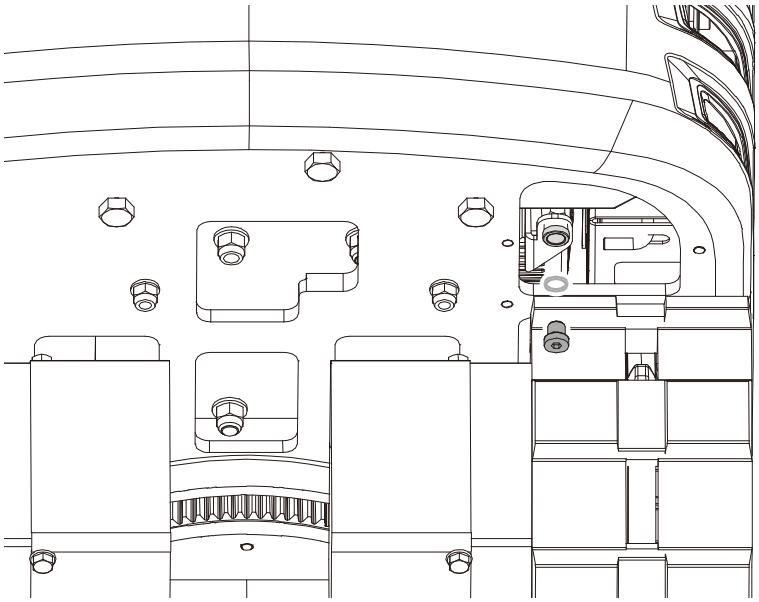

3. Fill with new oil to the required level.

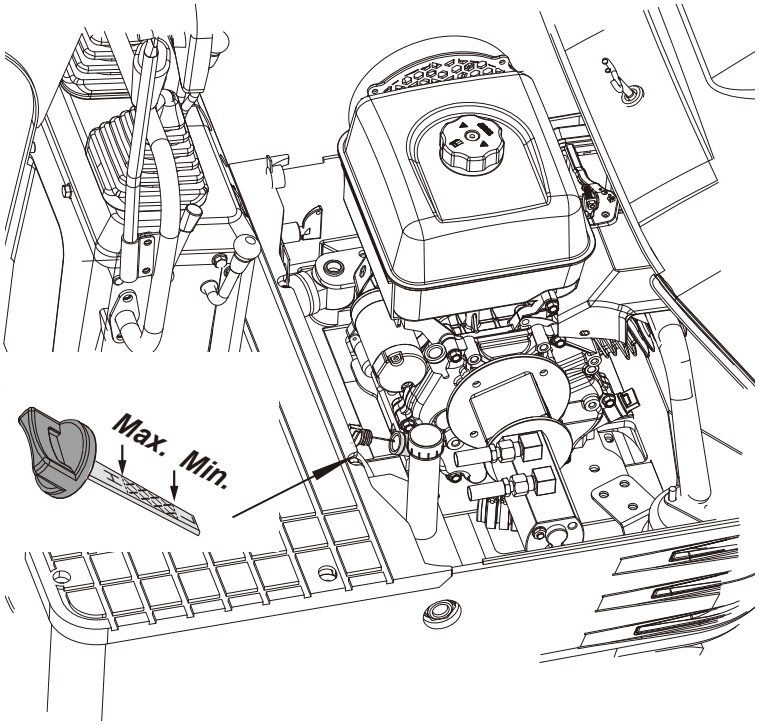

4. Allow the engine to turn at idle speed for 5 minutes. Check the oil level. To do this, insert the dipstick fully into the opening provided and pull it out again. If the oil level is between the two markings, no oil needs to be topped up.

IMPORTANT!

The engine oil must be changed once a year regardless of the operating hours.

Engine Oil Capacity: 1.2 qt

Note: The total oil quantity should be 4 more ounces (approx. 0.1 litres) above the above quantities due to the mounting angle and proper draining.

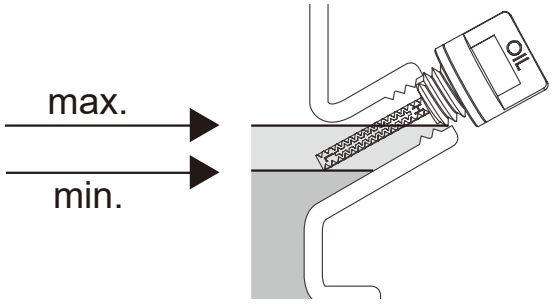

Engine oil recommendations

The engine oil influences performance and service life. Use a 4-stroke automotive detergent oil. SAE 10W-30 is recommended for general use.

Other viscosities shown in the diagram can be used if the average temperature in your area permits. The SAE oil viscosity and the utilization classification can be found on the API label on the oil container. Use API SERVICE category SJ or higher engine oil.

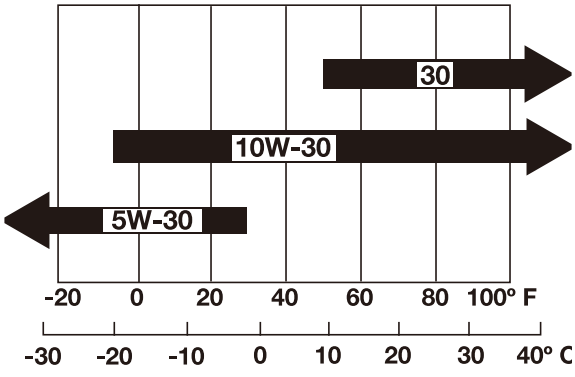

BATTERY MAINTENANCE

CAUTION

Batteries contain sulfuric acid, which can cause severe burns. Avoid contact with skin, eyes or clothing. First aid - External: Rinse with plenty of water. Internal: Drink large quantities of water or milk. Call a doctor immediately. Eyes: Rinse with plenty of water for 15 minutes and seek medical attention immediately. Keep batteries out of the reach of children.

CAUTION

Before inspecting or removing the battery, switch off the engine and set the ignition switch to the "OFF" position.

CAUTION

When removing the battery, always remove the negative earth cable first. When installing a battery, always connect the earthing cable last. This prevents a possible explosion due to sparking.

CAUTION

Always wear eye protection when working with the battery.

1. Check whether the battery appears deformed.
2. Replace the battery if it is deformed.
3. Remove any dust from the battery cover (ventilation opening).
4. Check whether the battery connections are loose. Tighten them if they are loose. Make sure that you tighten the positive screw and ensure that the tool used does not touch the cladding.

WARNING

Before tightening the positive screw, make sure that you switch off the switch of the negative earthing cable first.

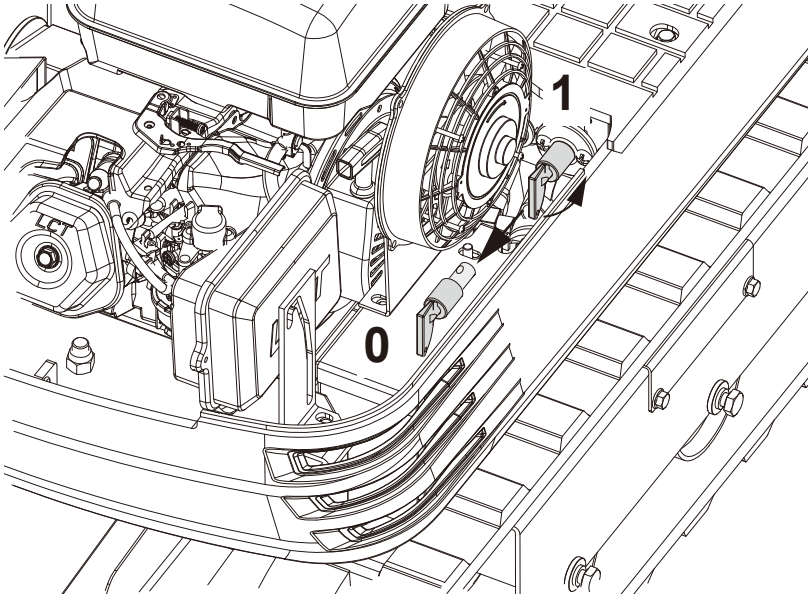

Battery charged

CAUTION

When the battery has been activated, hydrogen and oxygen gases in the battery are extremely explosive. Keep open sparks and flames away from the battery at all times, especially when charging the battery.

CAUTION

When disconnecting the cable from the battery, start with the negative connection. When connecting the cable to the battery, start with the positive connection.

CAUTION

Do not check the charge status of the battery by placing a metal object over the connections.

1. To charge the battery slowly, connect the positive terminal of the battery to the positive charging connection and the negative terminal to the negative connection. Then charge as usual.
2. Fast charging should only be carried out in emergencies. The battery is then partially charged at high speed and in a short time. If you are using a fast-charging battery, the battery must be recharged as quickly as possible. If this is not done, it can shorten the service life of the battery.
3. Use a battery with the same specifications when replacing an old battery with a new one.

Lubricating the teeth of the swivel bearing

1. Fill grease through the grease nipples (on the right side).
2. Lubricate at every 90° degree position (1.58 wheel) of the swivel frame.
3. Fill with approx. 50 g grease (approx. 20 strokes with the grease gun). Spread the grease over the teeth.

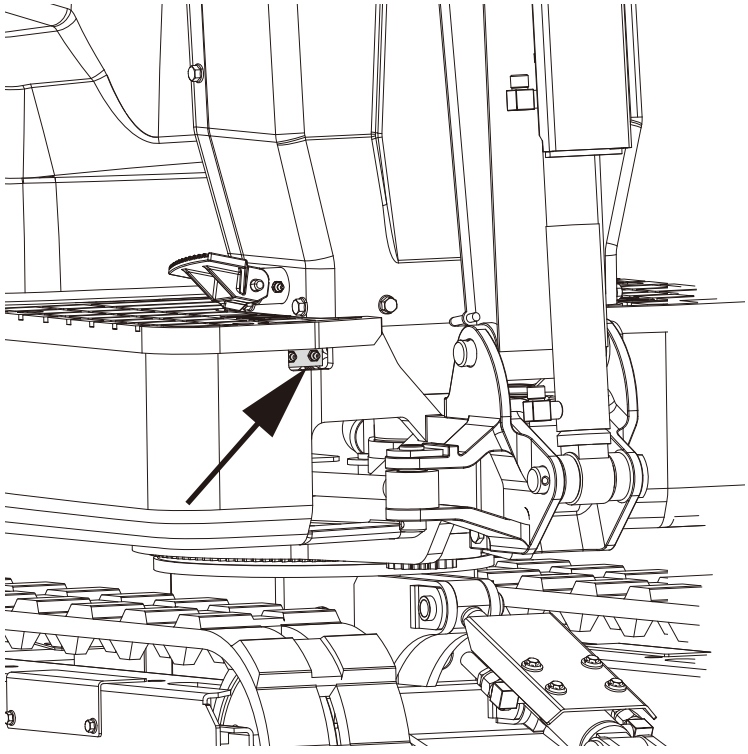

Inspection and cleaning of the air filter element

1. Open the bonnet and remove the dust cover.
2. Remove the outer element, clean the element and the inside of the housing and reassemble
3. When reassembling, ensure that the dust cover is fitted with the UP mark (arrow) pointing upwards. Do not remove the inner element.

IMPORTANT!

If the machine is used in extremely dusty areas, the air filter element must be inspected and cleaned more frequently than the specified maintenance intervals.

IMPORTANT!

The air filter has a dry element, keep it free of oil.

IMPORTANT!

Do not run the engine without the air filter.

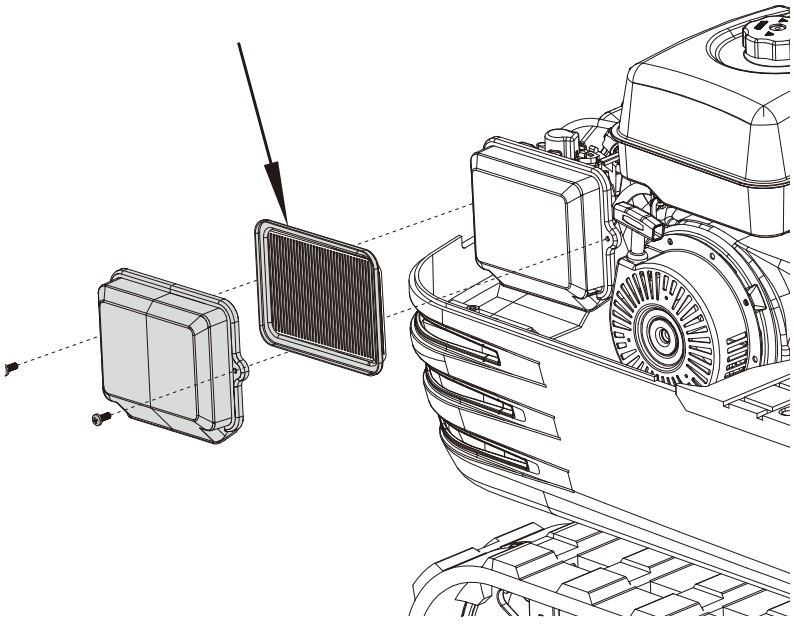

Maintenance of the air filter

CAUTION

Wear eye protection!

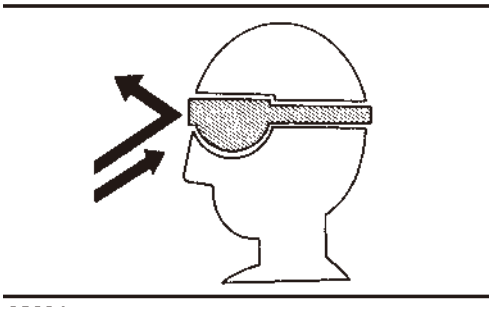

Cleaning with compressed air

The pressure of the compressed air must be below 205 kPa (2.1 kg/cm) and the cartridge must be blown clean from the inside to the outside until the dust deposits have been completely removed.

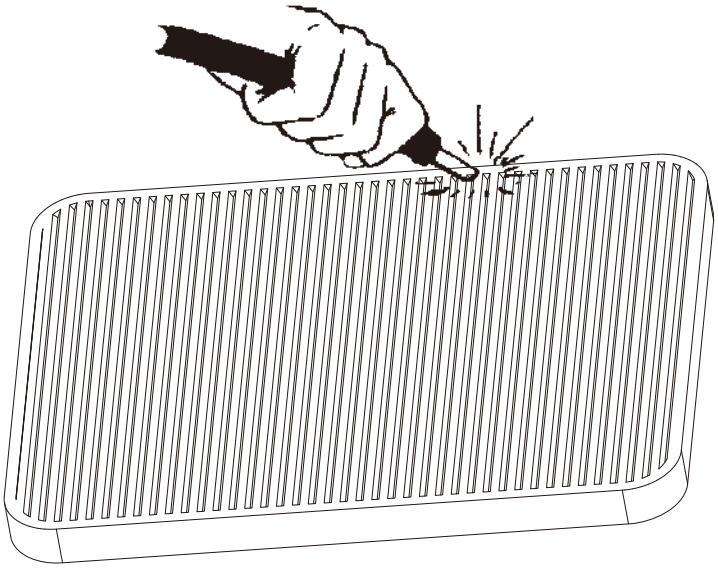

IMPORTANT!

If the air intake is still not sufficient or the color of the exhaust gases is abnormal even after cleaning, the air filter element must be replaced.

CHECKING THE SPARK PLUG

Use the special spark plug spanner to remove the spark plug and check whether there are any carbon deposits on the spark plug needle. In this case, remove the carbon deposits. Replace the spark plug if it is defective.

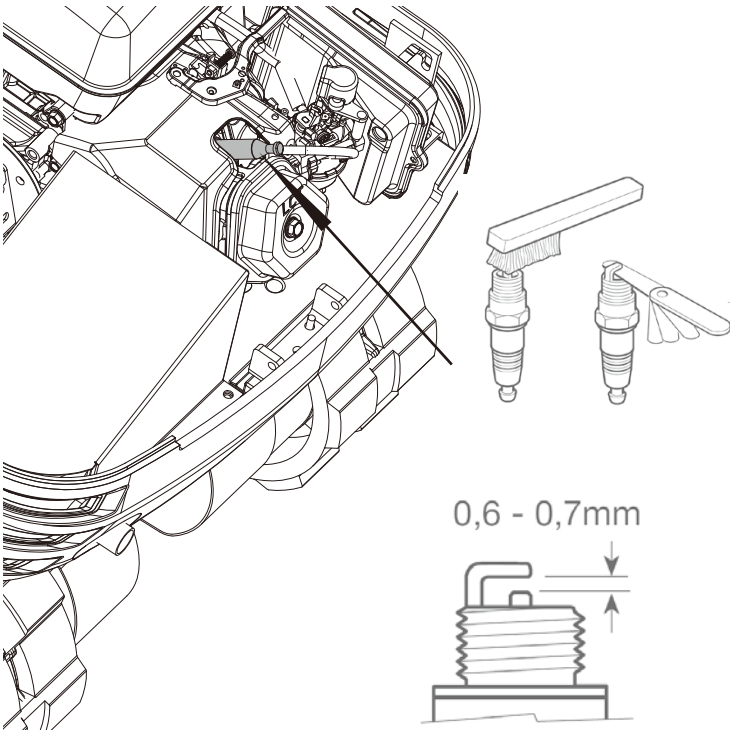

Maintenance of the spark plug

CAUTION

Using the wrong spark plug can damage the engine.

1. Remove the spark plug connector and use compressed air to remove deposits from the spark plug area.
2. Remove the spark plug with a 13/16-inch spark plug spanner.
3. Examine the spark plug. Replace them if the electrodes are worn or the insulation is torn or chipped. The spark plug gap should be set to 0.027-0.030 inch.
4. Install the spark plug carefully to avoid wedging the threads. Screw the spark plug in by hand until it stops turning.
5. Tighten the spark plug with a 13/16-inch spark plug spanner. Tighten the spark plug with a 1/4 turn when the spark plug is seated.

CAUTION

A loose spark plug can overheat and damage the engine. Overtightening the spark plug can damage the thread in the cylinder head.

6. Refit the spark plug connector. Ensure that it engages securely.

Every 100 operating hours:

Carry out the complete 50 operating hours maintenance at the same time.

LUBRICATING THE SWIVEL BEARING

1. Lubricate through the corresponding grease nipples.
2. Lubricate at every 90° position (1.58 wheel) of the swivel frame.
3. Apply 5 strokes with the grease gun in each point.

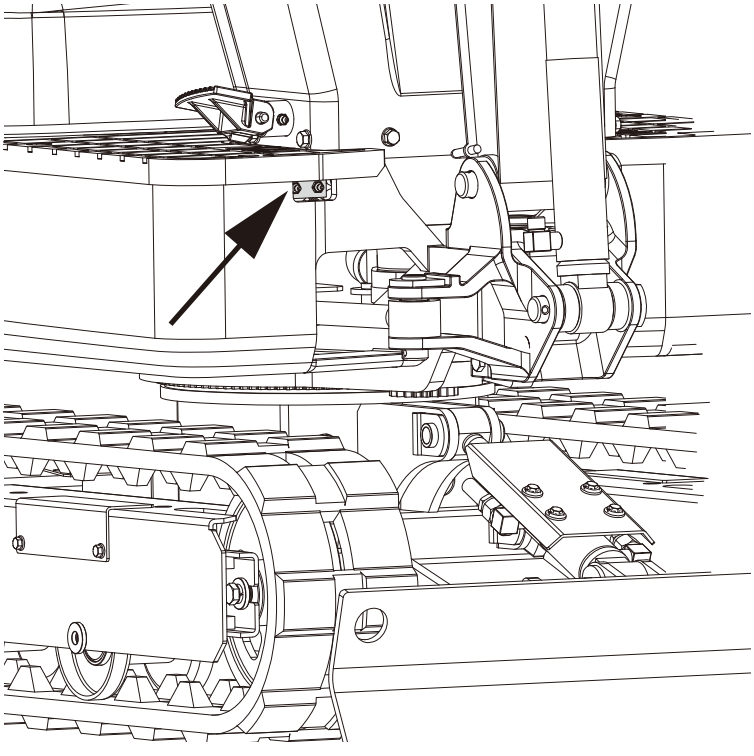

Every 200 operating hours:

Carry out the complete 50 and 100 operating hour maintenance at the same time.

REPLACING THE AIR FILTER ELEMENT

Open the bonnet and remove the dust cover. Remove the outer and inner elements and replace them with new elements. When reassembling, make sure that you fit the dust cover with the UP mark (arrow) pointing upwards.

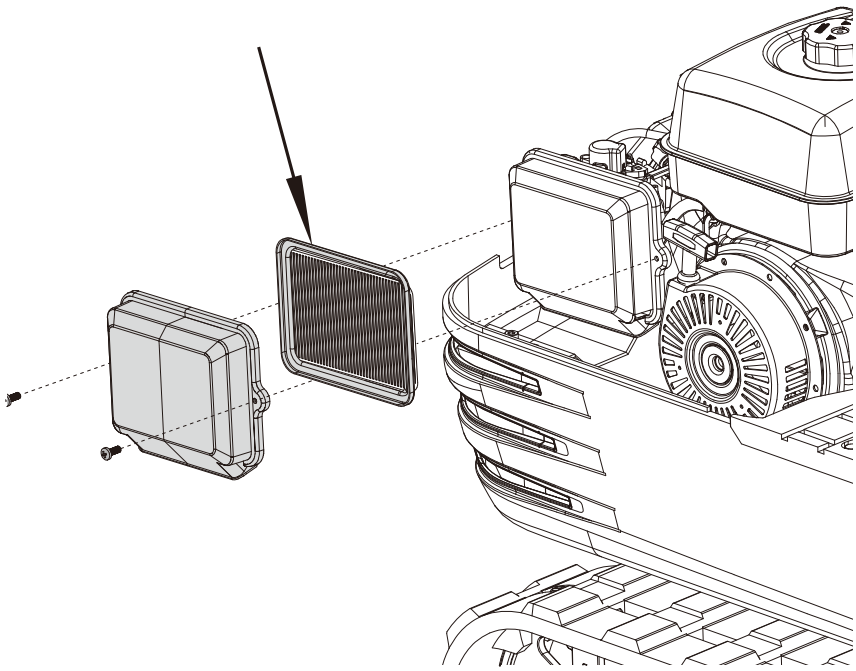

IMPORTANT!

Shorten the replacement intervals if you work in areas with a lot of dust or sand.

CHECKING THE PETROL LINE

1. Check that all lines and hose clamps are secure and undamaged.
2. If the lines and hose clamps are worn or damaged, they must be repaired or replaced immediately.

Every 1000 operating hours:

Carry out the complete 50, 100, 200 and 500 operating hour maintenance at the same time.

Changing the hydraulic oil (including replacing the suction filter and the return filter in the hydraulic tank)

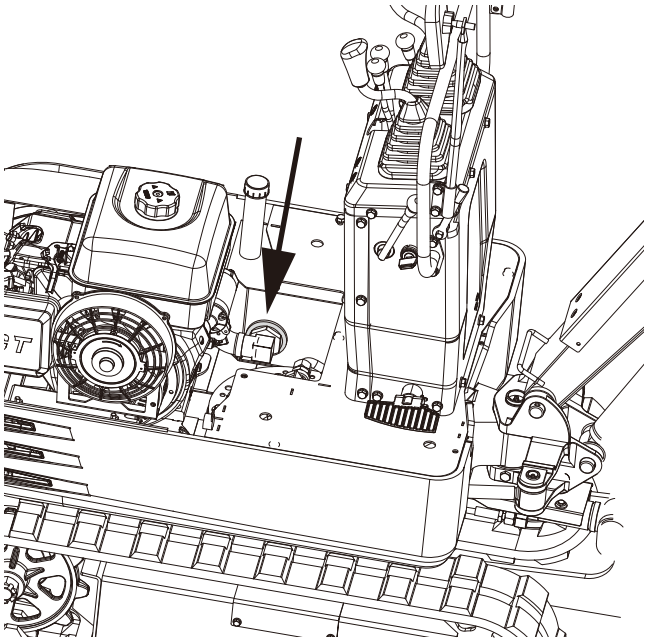

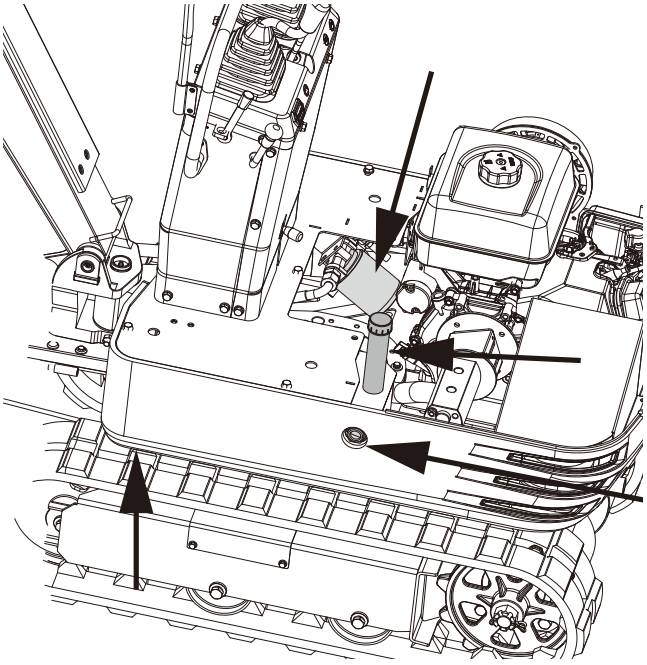

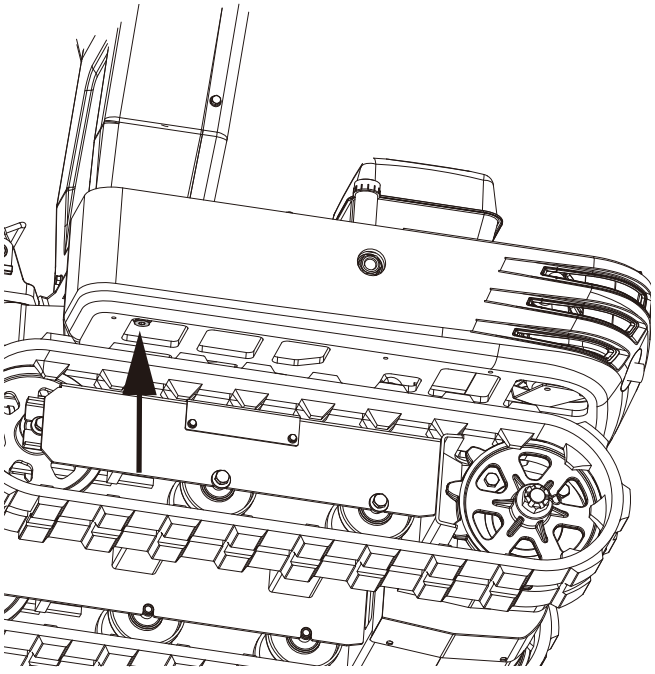

Check the level of the hydraulic oil in the inspection window. Add oil when the level is lower than 1/3.

Hydraulic oil quantities	Hydraulic oil tank	approximately 10.8 litres
	Total oil quantity	approximately 14.0 litres

Hydraulic oil check

1. Changing and topping up hydraulic oil (1) Only use the oil types recommended in the operator's manual to change or top up the oil.
2. Do not mix different brands of oil when topping up.
3. Change the return filter and oil.
4. The filter must be changed more frequently due to contamination caused by frequent removal and attachment of the pipes.
5. Use the correct filter for replacement.
6. Oil change after operating hours.

	Return filter	Suction filter
Normal excavation work	Every 1000 hours	1000 hours

Annual maintenance:

Electrical cabling and fuses

Check the connections regularly for correct connections. Loose cable connections or damaged cables can lead to malfunctions in the electrical system. This could lead to short circuits, leakage currents and other costly problems. Check the cabling and replace damaged components immediately. Contact your dealer if the fuse blows immediately after replacement. Only use the specified fuses.

Replacing the spark plug

Replace after one year or after 500 operating hours. Maintenance every two years.

Replacing the petrol line

Replace the cables and terminals. (See "Checking the petrol line" under Maintenance every 200 hours.)

Other settings and replacements

Adjusting the crawlers

Proceed as follows to loosen the crawlers:

CAUTION

Do not crawl under the excavator.

1. Remove the side cover plate and loosen the M20 nut on the inside using a 30 mm spanner.
2. Adjust the M20x120 hexagonal screw and turn it clockwise to tighten the crawler. The crawler loosens when you turn it clockwise.
3. Tighten the M20 nut with a spanner after adjustment.

Note: When tightening, the torque must be between 98 and 108 Nm.

4. Attach the side cover plate.

IMPORTANT!

If the crawlers are too tight, this increases wear.

IMPORTANT!

If the crawlers are too loose, the crawler shoes can collide with the sprocket and wear is increased. The crawlers can shift and detach.

IMPORTANT!

Clean the crawlers after each use.

IMPORTANT!

If the tension of the crawlers is increased by adhering sludge, lift the crawlers using the boom, arm and bucket, allow the engine to turn at idle speed and carefully remove the sludge from the crawlers, especially the openings of the connecting plate.

Tension the crawlers as specified:

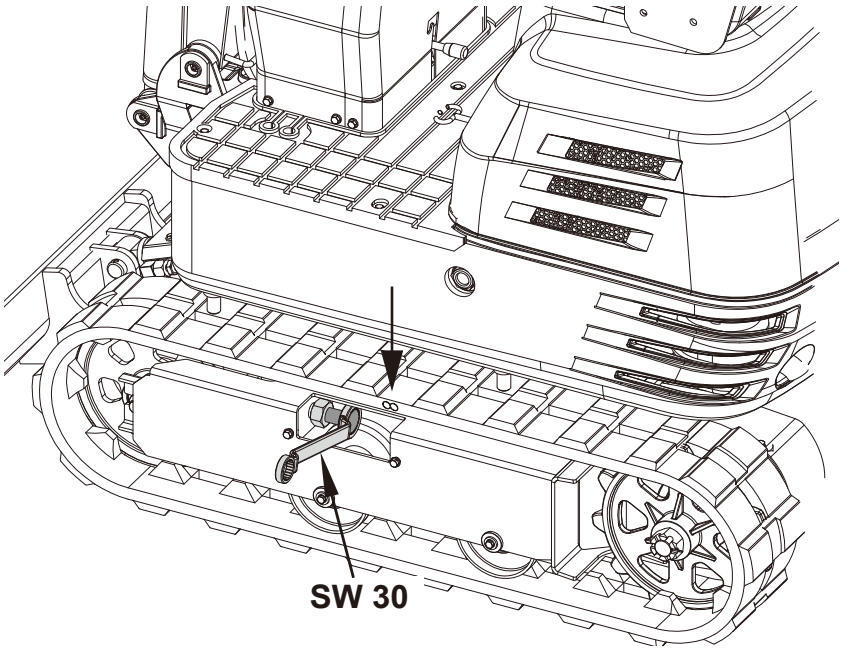

1. Tension the crawlers when they are raised until the distance (clearance between the crawler roller and the inner surface of the crawlers) is 10 to 15 mm (see figure). In this case, the connecting piece of the crawlers is positioned at the top center between the idle roller and the pinion.

DANGER

Do not work under the machine under these conditions.

DANGER

For safety reasons, do not rely on hydraulic stabilizers, as they can leak, drop suddenly or be lowered unintentionally.

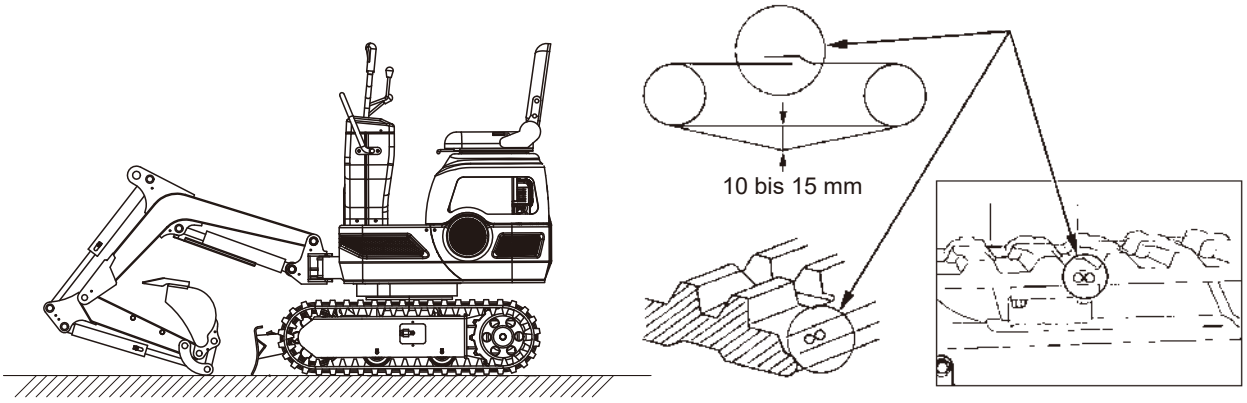

IMPORTANT!

Ensure that no foreign objects such as stones get caught in the crawlers. Remove such foreign objects before adjusting the crawler tension.

IMPORTANT!

Crawler connecting piece
The ends of the rubber crawlers are joined together with a connecting piece. When setting the crawlers, the connecting piece must be positioned at the top center between the idle roller and the pinion. If the connecting piece is positioned incorrectly, the crawler will be tensioned too loosely and further readjustment will be necessary.

IMPORTANT!

After adjusting, turn the crawler once or twice to check the tension.

IMPORTANT!

In addition, the following points must be observed when adjusting the crawlers.
(1) If a crawl er sags more than 0.98 inches (25 mm), it must be readjusted.
(2) Check the tension of the crawlers 30 hours after first use and readjust if necessary. Check and then adjust every 50 operating hours.

Special instructions for the use of rubber crawlers

1. Change direction as slowly as possible. Avoid turning on the spot to prevent wear and the ingress of dirt.

2. Move the machine a short distance straight backwards if too much dirt and sand is blocking the crawlers. The soil and sand will then fall out and you can change direction.

3. Avoid using the rubber crawlers on riverbeds, stony surfaces, reinforced concrete and iron plates. The rubber can be damaged and wear increased.

Replacing the bucket

CAUTION

If the coupling pins are removed or installed, chips may fall off. Always use gloves, safety goggles and a helmet.

CAUTION

Always work in pairs if the device needs to be changed while the engine is running. One person sits in the operator's seat and the other works on the machine.

CAUTION

Do not use your fingers to center the openings. These could be injured or severed by sudden, uncontrolled movements.

CAUTION

Read the manual for the attachment part in order to carry out an operation correctly and safely when installing other attachments.

Replacing fuses

A slow-blow fuse is provided to protect the electrical circuits. Check the electrical circuits for problems and replace the old one with a new, compatible slow-blow fuse if it has blown.

1. Remove the cover from the fuse box.
2. Replace the blown fuse with a new fuse of the same rating.

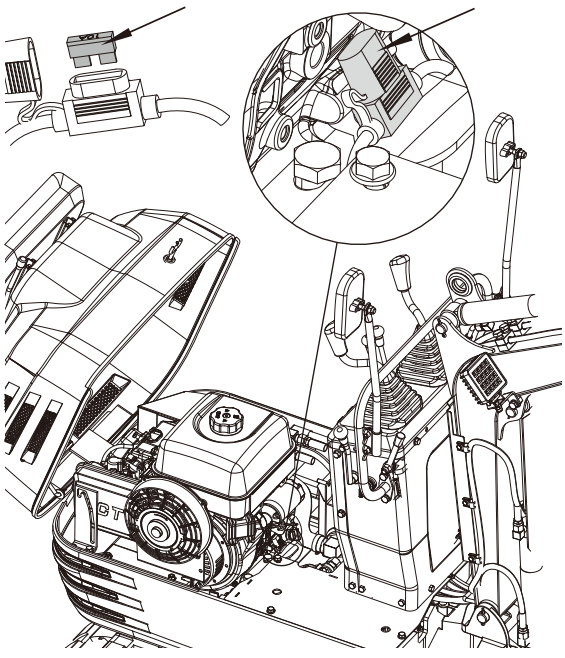

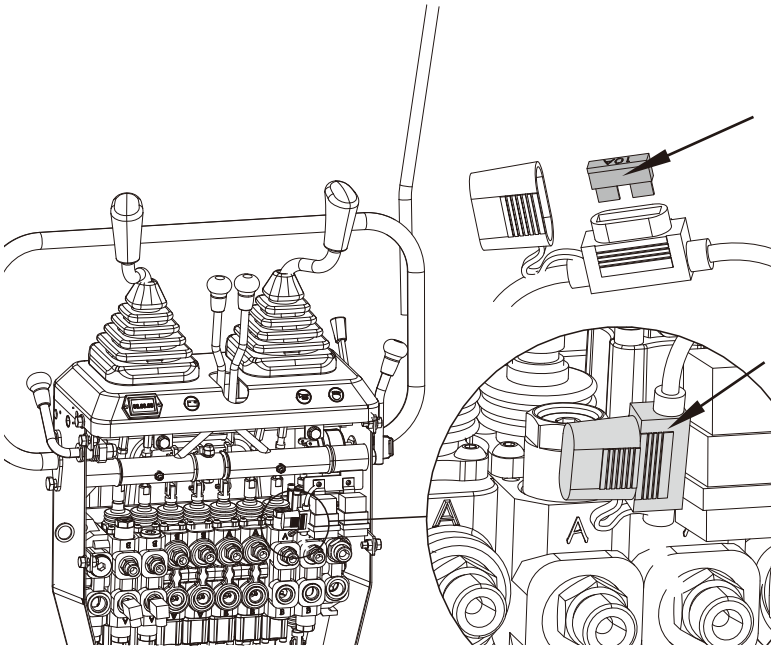

Performance of the fuse and circuits

No.	Power	Switching circuit
1	10 A	Working relay fuse
2	10 A	Fuse, work light, horn, hour meter

Regular replacement f important components

To ensure safe operation, we strongly advise you to inspect and maintain the machine at regular intervals. For additional safety, ask your dealer to replace the following important components.

These parts are subject to material deterioration or wear out over time. During regular inspections, it is difficult to assess how badly they are damaged. They must therefore be replaced with new parts, even if the wear and tear is not visible after a certain period of use.

If a component is worn out before the end of its service life, it must be repaired or replaced in the same way as other parts.

If a hose clamp is deformed or torn, it must be repaired.

Check the following points for hydraulic lines that are not replaced regularly. Tighten or replace them if you notice any abnormalities.

When replacing the hydraulic lines, also replace their O-rings and seals. Contact your dealer to replace important parts.

Also check the petrol and hydraulic lines during the following regular inspections.

Inspection interval	Control points
Daily checks	Leaking oil at the connections and points of petrol and hydraulic lines.
Monthly	Leaking oil at the connections and points of petrol and hydraulic lines. Damage to petrol and hydraulic lines (cracks, chafing).
Annually	Leaking oil at the connections and points of petrol and hydraulic lines. Impairment, deformation, deterioration, twisting and other damage (cracks, chafing) to petrol and hydraulic lines.

List of important components

No.	Components	Place of use	Quantity	Period
1	Hydraulic line (intake)	Main pump	1	Every 2 years on 4000 hours
2	Hydraulic line (supply)	Main pump control valve	2	
3	Hydraulic line (boom cylinder)	Control valve boom cylinder	2	
4	Hydraulic line (arm cylinder)	Control valve arm cylinder	2	
5	Hydraulic line (bucket cylinder)	Control valve bucket cylinder	2	
6	Hydraulic line (swiveling cylinder)	Control valve swiveling cylinder	2	
7	Hydraulic conduit (leveling blade cylinder & crawler cylinder)	Control valve swivel joint	4	
		Leveling blade cylinder swivel joint	4	
		Swivel joint tank cylinder	2	
8	Hydraulic line	Control valve connection	1	
		Connection return line	1	
9	Hydraulic line (swivel motor)	Control valve swivel motor	2	

Only use a hydraulic line approved by the dealer to avoid serious damage to the hydraulic system.

RECOMMENDED OIL TYPES

Fuel recommendations

Use unleaded petrol with an octane rating of 86 or higher. These engines work best with unleaded petrol. NEVER use stale or contaminated petrol or an oil/petrol mixture. Prevent dirt or water from getting into the fuel tank. Only use suitable and properly labelled petrol cans. Maximum recommended ethanol content: 10% This is not compatible with E15.

Engine oil recommendations

The engine oil influences performance and service life. Use 4-stroke automotive oil. SAE 10W-30 is recommended for general use. Other viscosities shown in the diagram can be used if the average temperature in your area permits.

Recommended hydraulic oils

IMPORTANT!

A hydraulic oil of ISO 32 quality was used before delivery.

Recommended hydraulic oil type:

10W AW32
ASLE H-150
ISO 32

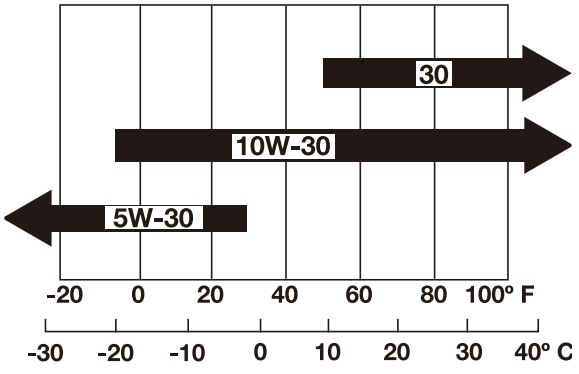

Recommended lubricating oil

Usage	Shell	Mobil	Exxon
Lubrication	Shell Alvania EP2	Mobilux EP2	Beacon Q2

The SAE oil viscosity and the utilisation classification can be found on the API label on the oil container Use API SERVICE category SJ or higher engine oil.

REPAIR & ORDERING SPARE PARTS

After repairs or maintenance, make sure that all safety-related parts are installed and are in perfect condition. All parts which may cause injury must be kept where they are inaccessible to children or others.

ATTENTION

Such work should be performed by a customer service center or an authorised specialist. The same applies to accessory parts.

Connections and repairs

Connections and repair work on the electrical equipment may only be carried out by electricians.Please provide the following information in the event of any queries:

- Type of current for the motor
- Machine data - type plate
- Motor data - type plate

Ordering spare parts

Please provide the following information when ordering spare parts:

- Model designation
- Item number

Service information

With this product, it is necessary to note that the following parts are subject to natural or usage-related wear, or that the following parts are required as consumables.

Wearing parts*: V-belt, engine oil, spark plug, air filter, rubber tracks

* may not be included in the scope of delivery!

DISPOSAL AND RECYCLING

Notes for packaging



The packaging materials are recyclable. Please dispose of packaging in an environmentally friendly manner.

Information on the disposal of used batteries



Used batteries do not belong in household waste, but should be collected and disposed of separately!

- For safe removal of used batteries from the electrical device and for information on their type or chemical system, please refer to the additional information in the operating or assembly instructions.
- Owners or users of batteries are legally obliged to return them after use. The return is limited to household quantities.
- Old batteries may contain pollutants or heavy metals that can harm the environment or human health. Recycling old batteries and using the resources they contain helps to protect these two important issues. The plastic and metal parts used can be separated by type and thus recycled.
- The symbol of the crossed-out dustbin means that used batteries must not be disposed of with household waste.
- If the signs Hg, Cd or Pb are also located below the dustbin symbol, this stands for the following:

- Hg: Battery contains more than 0.0005% mercury
- Cd: Battery contains more than 0.002% cadmium
- Pb: Battery contains more than 0.004% lead

- Used batteries can be returned free of charge to the following places:

- Public disposal or collection points (e.g. municipal works yards)
- Battery retail outlets
- Take-back points of the common take-back system for old device batteries
- Take-back point of the manufacturer (if not a member of the common take-back system)

You can find out how to dispose of the disused device from your local authority or city administration.

Fuels and oils

- Before disposing of the device, the fuel tank and the engine oil tank must be emptied!
- Fuel and engine oil do not belong in household waste or drains, but must be collected or disposed of separately!
- Empty oil and fuel tanks must be disposed of in an environmentally friendly manner.

TROUBLESHOOTING

The following table shows fault symptoms and describes remedial measures in the event of your product failing to work properly. If you cannot localize and rectify the problem with this, please contact your service workshop.

Fault		Possible cause	Remedy
Engine	Starting difficulties	The petrol valve is shut.	Ensure that the petrol valve is in the "Open" position.
		Air or water in the fuel system.	See the instructions in the section "Removing water or air from the fuel tank" to remove air and water.
		The viscosity of the oil is too high, so that the engine turns too slowly in winter.	Use winter hydraulic oil.
		The battery is almost flat. The starter motor does not work.	Start with the cable pull to recharge the battery.
		The spark plug does not ignite.	Replace the spark plug.
		Low oil level.	Add engine oil.
	Insufficient engine power.	Low fuel level.	Check the fuel level and top up if necessary.
		Air filter blocked.	Clean the air filter element.
	The engine stops suddenly.	Low fuel level.	Check the fuel level and top up if necessary. Flush the fuel system.
	Abnormal color of the exhaust gases.	Bad petrol.	Use high quality petrol.
		Too much engine oil.	Drain the engine oil to the specified oil quantity.
		The cold starter lever shuts the cold starter valve in the carburetor.	Open the cold starter valve.
Hydraulic system	The performance of the boom, arm, bucket, drive, swiveling function and dozer blade is too poor.	Too little hydraulic oil.	Add oil.
		Leaks in lines and/or connections.	Replace the line or connection.
	The swivel motor does not work.	The swiveling locking pin is in the locking position.	Remove the swiveling locking pin from the locking position.
Drive system	Deviation from the direction of travel.	Blockage by stones.	Remove the foreign objects.
		The crawlers are too loose or too tight.	Set the appropriate settings.

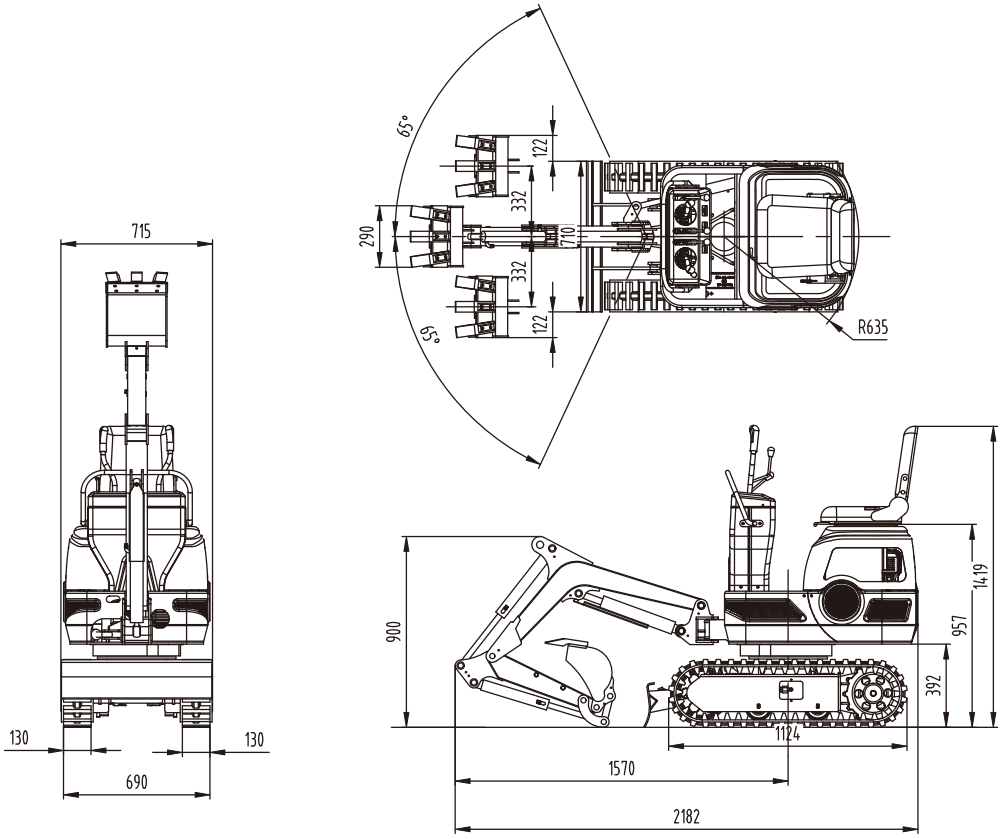
715
130
130
690
65°
65°
122
332
290
710
332
122
R635
900
1419
957
392
1124
1570
2182

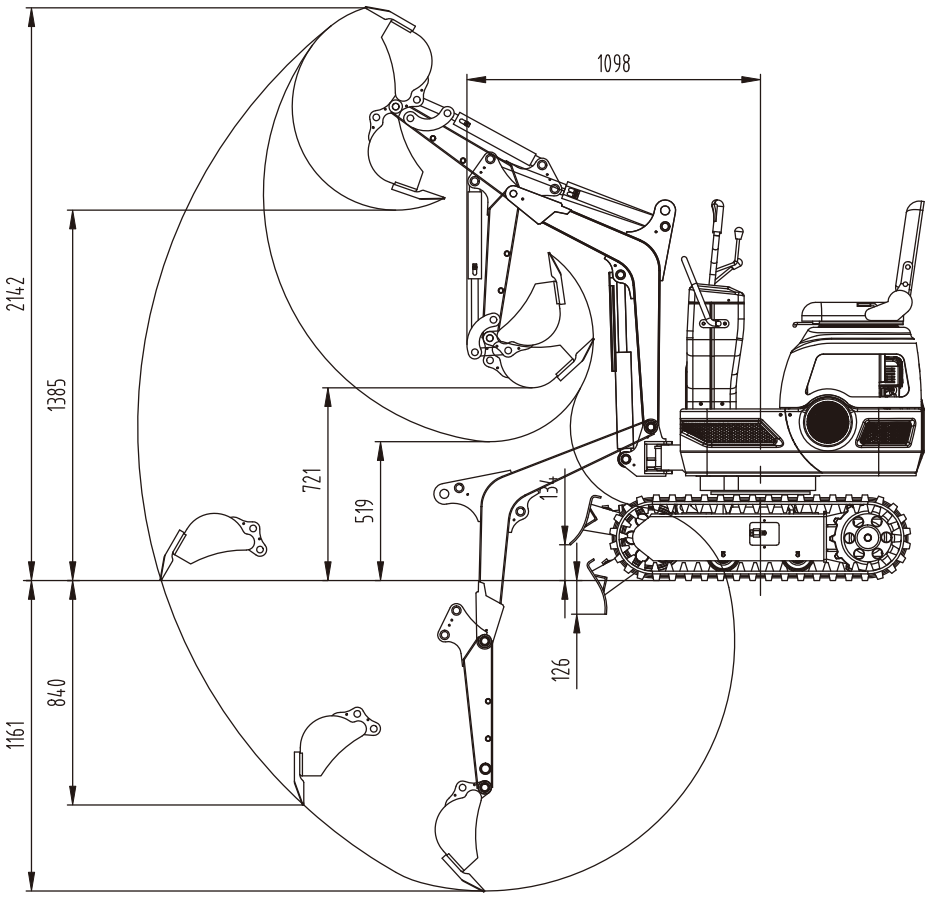
1098
2142
1385
721
519
134
126
840
1161

CHECKING THE PETROL LINE

1. The lifting capacity is based on ISO 10567 and does not exceed 75% of the static tipping load of the machine or 87% of the hydraulic lifting capacity of the machine.

2. The strokes are as follows:

The load point corresponds to the front bolt part of the arm.

The machine positions are (i) over front (top plate), (ii) over front (bottom plate), and (iii) over side.

The working cylinder is the boom cylinder.

3. The excavator bucket, hook, loop and other lifting accessories are considered in the loads.

WARNING

It is not permitted to lift loads greater than those listed in the lifting capacity tables.

WARNING

The values specified in the tables only apply on a level, hard surface. When lifting on soft ground, the machine can tip over because the load is only concentrated on one part of the machine. The table values are calculated at the end of the arm without the bucket. To find the permitted loads for machines with a bucket, the weight of the bucket must be taken off the values in the table.

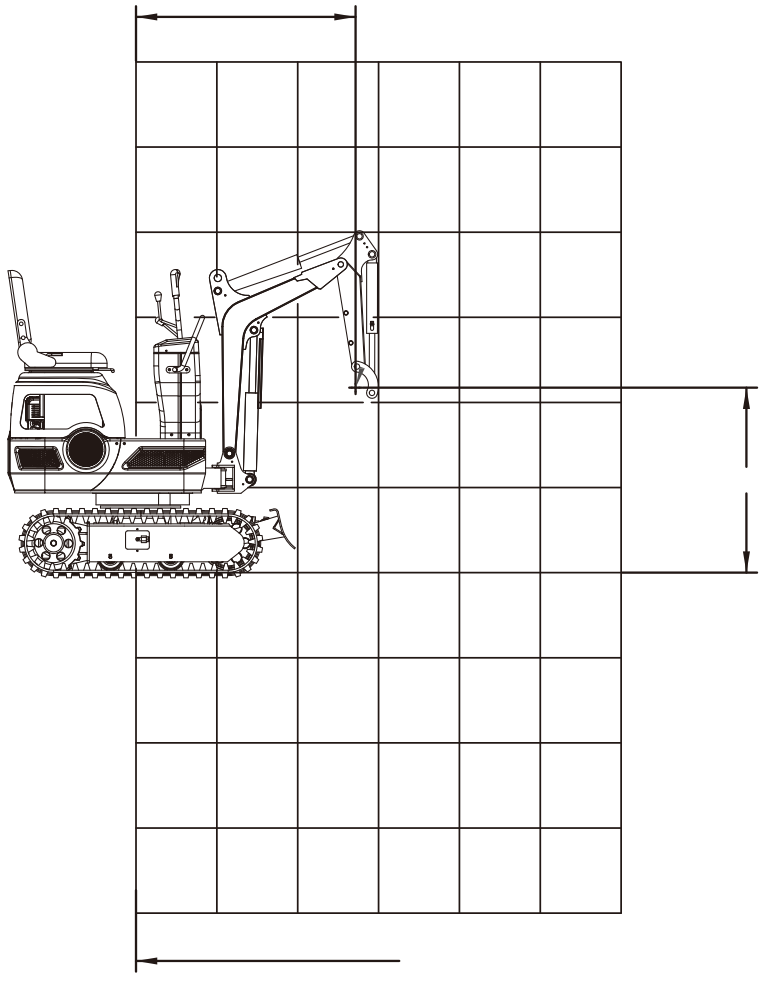

(i) OVER FRONT (TOP PLATE)

Height (mm)	Load radius (mm)						
	0	380	760	1140	1520	1900	2280
2400							
2000							
1600					1.3 (130)		
1200					1.3 (130)		
800				2.0 (200)	1.3 (130)	0.9 (90)	
400				1.9 (190)	1.2 (120)	0.9 (90)	
0				1.9 (190)	1.2 (120)		
-400			3.8 (390)	1.9 (190)	1.2 (120)		
-800				1.4 (140)			
-1200							

(i) OVER FRONT (BOTTOM PLATE)

Height (mm)	Load radius (mm)						
	0	380	760	1140	1520	1900	2280
2400							
2000							
1600					1.5 (150)		
1200					1.5 (150)		
800				2.4 (240)	1.8 (180)	1.6 (160)	
400				3.1 (320)	2.1 (210)	1.6 (160)	
0				3.2 (330)	2.2 (220)		
-400			4.8 (490)	2.8 (290)	1.9 (190)		
-800				1.4 (140)			
-1200							

(ii) OVER FRONT

Height (mm)	Load radius (mm)						
	0	380	760	1140	1520	1900	2280
2400							
2000							
1600					1.1 (110)		
1200					1.1 (110)		
800				1.6 (160)	1.0 (100)	0.7 (70)	
400				1.5 (150)	1.0 (100)	0.7 (70)	
0				1.4 (140)	0.9 (90)		
-400			2.7 (280)	1.4 (140)	0.9 (90)		
-800				1.4 (140)			
-1200							


CROBA