Operator's Manual

45-J Diesel

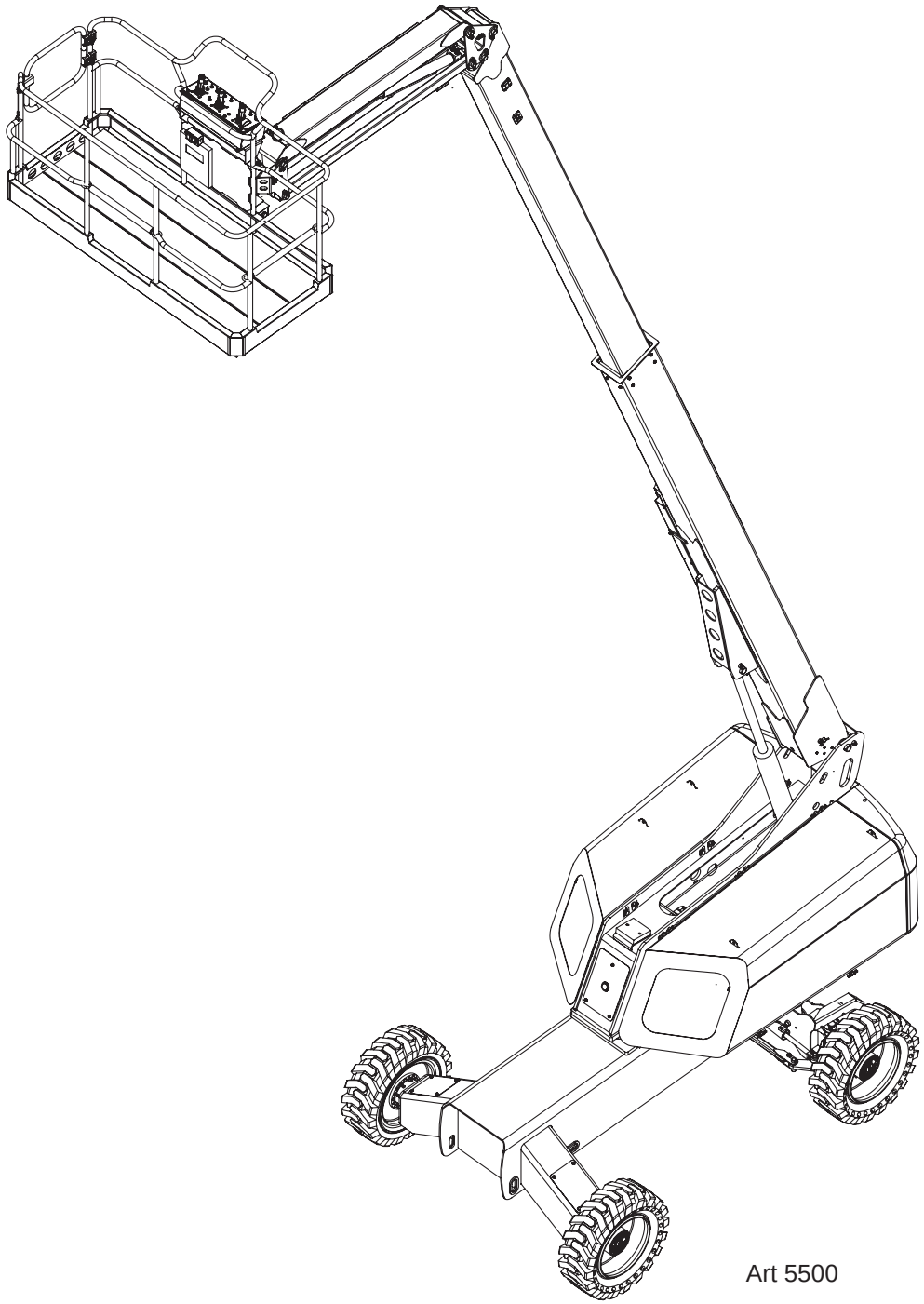

Art 5500

This manual applies to machines ANSI A92.20-2020 and CSA B354.6-2019.

Serial Number Range
14700200 - Up

Part # 96347
August 2026

Revision History

Date	Reason for Update
May 2021	New Release
December 2024	Added Secondary Guarding Added Inverted Controls

MEC Aerial Work Platforms

1401 S. Madera Avenue, Kerman, CA 93630 USA
Toll Free: 1 - 877 - 632 - 5438
Phone: 1 - 559 - 842 - 1500
Fax: 1 - 559 - 842 - 1520
info@MECawp.com
www.MECawp.com

Table of Contents

Section 1 - Introduction 1
Introduction 1

Section 2 - Safety 2
Safety 2
Safety Alert Symbols & Fall Protection 3

Section 3 - Machine Specifications. 4
Machine Specifications 4

Section 4 - Hazards 5
Electrocution Hazards 5
Tip-over Hazards 6
Fall Hazards 7
Collision Hazards 8
Additional Safety Hazards 9
Battery Safety 10

Section 5 - Controls & Components 11
Component Locations 11
Platform Controls 12
Base Controls 14

Section 6 - Workplace Inspection 16
Workplace Inspection 16

Section 7 - Operating Instructions & Pre-Operation Function Tests. . . . 17
Operating Instructions & Pre-Operation Function Tests 17
Base Controls Operation & Pre-Operation Functions Test 20
Platform Control Operation & Pre-Operation Functions Test 24
Platform Control Panel. 25
Platform Operations Test 26
Drive Control Lever Operation. 28
Auxiliary Power System & Test 32

Section 8 - Machine Inspections and Maintenance 34
Machine Inspections and Maintenance 34
Supporting The Boom Assembly 36
Pre-Start Inspection Checklist 37
Frequent Inspection Checklist 38
Annual Inspection Report 39
Routine Maintenance 40
Lubrication 41

Section 9 - Troubleshooting 42
Troubleshooting 42

Section 10 - Warning and Instructional Decals 43
Warning and Instructional Decals 43
Serial Plate Location 46

Section 11 - Transport and Lifting Instructions 47
Transport and Lifting Instructions 47
Boom Lifting Instructions 51

Introduction

This Operator's Manual has been designed to provide you, the owner, user or operator, with the instructions and operating procedures essential to properly and safely operate your MEC Aerial Work Platform for positioning personnel, along with their necessary tools and materials, to overhead work locations.

This Operator's Manual and other manuals provided by MEC on the machine must be read and understood prior to operating your MEC Aerial Work Platform. The operator should not accept operating responsibility until he/she has read and understands the operator's manual as well as having operated the MEC Aerial Work Platform under supervision of an authorized, trained and qualified operator.

DANGER

It is essential that the operator of the aerial work platform is not alone at the workplace during operation.

Modifications of this machine from the original design and specifications without written permission from MEC are strictly forbidden. A modification may compromise the safety of the machine, subjecting the platform occupants and personal around the machine to serious injury or death.

Your MEC Aerial Work Platform has been designed, built, and tested to provide safe, dependable service. Only authorized, trained and qualified personnel shall be allowed to operate or service the machine.

MEC, as manufacturer, has no direct control over machine application and operation. Proper safety practices are the responsibility of the owner, user and operator.

If there is a question on application and/or operation contact:

MEC Aerial Work Platforms

1401 S. Madera Avenue, Kerman, CA 93630 USA
Toll Free: 1 - 877 - 632 - 5438
Phone: 1 - 559 - 842 - 1500
Fax: 1 - 559 - 842 - 1520
info@MECawp.com
www.MECawp.com

Safety

DO NOT operate this machine until you have read and understood this manual, have performed the Workplace Inspection, Pre-Start Inspection and Routine Maintenance, and have completed all the test operations detailed in the Operating Instructions section.

Failure to read, understand and follow all safety rules, warnings, and instructions could result in serious injury or death. For your safety and the safety of those around you, you must operate your machine as instructed in this manual.

MEC designs aerial work platforms to safely and reliably position personnel, along with their necessary tools and materials, at overhead work locations. The owner/user/operator of the machine should not accept responsibility for the operation of the machine unless properly trained.

ANSI and other applicable standards identify requirements of all parties who may be involved with boom-supported elevating work platforms. The Manual of Responsibilities is considered a part of this machine and can be found in the manual compartment, located at the platform control station. To ensure safe use of machine, inspections and training specified in ANSI/SIA A92.22 & A92.24 must be performed at designated intervals as prescribed.

WARNING

This product can expose you to chemicals known to the State of California to cause cancer and birth defects or other reproductive harm. For more information go to **www.p65warnings.ca.gov.**

Safety Alert Symbols & Fall Protection

MEC manuals and decals use symbols, colors and signal words to help you recognize important safety, operation and maintenance information.

DANGER **RED and the word DANGER – Indicates an imminently hazardous situation which, if not avoided, will result in death or serious injury.**

WARNING **ORANGE and the word WARNING – Indicates a potentially hazardous situation which, if not avoided, could result in death or serious injury.**

CAUTION **YELLOW with alert symbol and the word CAUTION – Indicates a potentially hazardous situation which, if not avoided, may result in minor or moderate injury.**

CAUTION **YELLOW without alert symbol and the word CAUTION – Indicates a potentially hazardous situation which, if not avoided, may result in property damage.**

NOTICE **GREEN and the word NOTICE – Indicates operation or maintenance information.**

Fall Protection

Operators must comply with employer, job site and governmental rules regarding the use of personal protective equipment.

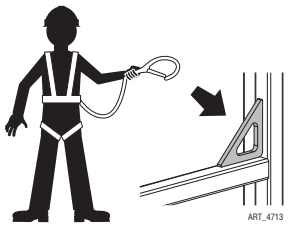

If required by your employer or job site, use personal fall protection equipment (PFPE) when operating this machine.

All PFPE must comply with applicable governmental regulations, and must be inspected and used in accordance with the PFPE manufacturer’s instructions.

Fall restraint must be properly attached to a designated anchorage point when driving or operating the machine. Attach only one fall restraint to each anchorage point.

Machine Specifications

Work Height*		50 ft 3 in	15.5 m
Platform Height		44 ft 3 in	13.5 m
Maximum Drive Height		Full Height	
Maximum Outreach		38 ft	11.6 m
Turntable Swing		Continuous	
Jib Range Of Motion		135°	
Platform Rotation		180° (90° Each Side)	
Machine Weight** (Unloaded)		14,100 lb	6,400 kg
Lift Capacity	Up To Serial #14700199	500 lb	227 kg
	From Serial #14700200	600 lb	272 kg
Maximum Occupants		2	
Stowed Height		95 in	2.4 m
Overall Length		28 ft	8.5 m
Overall Width		96 in	2.44 m
Tailswing		35 in	0.9 m
Platform Details	Width	90 in	2.3 m
	Depth	40 in	1 m
	Entry	1 End Swing Gate 2 Slide Bar Entries	
Turning Radius, Inside		6 ft 6 in	2 m
Ground Clearance		13.5 in	34 cm
Lift Speed		40 sec	
Extend Speed		20 sec	
Jib Lift Speed		15 sec	
Drive Speed (Proportional)	Stowed	0-3.5 mph	0-5.5 km/h
	Raised or Extended	0-0.5 mph	0-0.8 km/h
Gradeability	Stowed, Downhill	40%/22°	
	Stowed, Uphill	40%/22°	
Breakover Angle		40%/22°	
Axle Oscillation		10° (5° Each Side)	
Maximum Allowable Operating Wind Speed		28 mph	12.5 m/sec (45 km/h)
Engine		Kubota V1505 - Tier 4 Final	
Fuel Type		Diesel	
Fuel Capacity		16 gal	60 liter
Hydraulic Fluid Capacity		40 gal	150 liter
Maximum Vibration		Does not exceed 8.2 ft/sec^2 (2.5 m/sec^2) at operator's position	
Ambient Operating Range		-20° F min 120° F max	-29° C min 49° C max
Wheel Lug Nut Torque		150 lb-ft	203 Nm

Sound Pressure At Workstation	80 dB(A)	
Sound Power Level	86 dB @ 1m	
Ground Pressure/Wheel (Maximum)	69 psi	4.86 kg/cm^2
Maximum Wheel Load	5869 lb	2662 kg

Meets requirements of ANSI A92.20-2020 and CSA B354.6-2019.

Allowable ambient temperature range: -20° F to 120° F (-29° C to 49°C).
Consult with MEC for operation outside of this range.

*Working Height adds 6 feet (2 m) to platform height.
**Weight may increase with certain options.

Electrocution Hazards

ELECTROCUTION HAZARD! THIS MACHINE IS NOT INSULATED!

DEATH OR SERIOUS INJURY will result from contact with or inadequate clearance from any electrically charged conductor.

DANGER

You must maintain a CLEARANCE OF AT LEAST 10 FEET (3.05 m) between any part of the machine, or its load, and any energized electrical line or apparatus carrying over 300 Volts up to 50,000 Volts. One foot (30.5 cm) additional clearance is required for every additional 30,000 Volts.

Observe Minimum Safe Approach Distance.

This machine **is not** electrically insulated and **will not** provide protection from contact with or proximity to electrical current.



Maintain safe distances from energized electrical lines and apparatus in accordance with applicable government regulations and the following chart:

Minimum Safe Approach Distance

Voltage Phase to Phase	Minimum Safe Approach Distance Feet	Meters
0 to 300 Volts	Avoid Contact	
Over 300V to 50kv	10	3.1
Over 50KV to 200KV	15	4.6
Over 200KV to 350KV	20	6.1
Over 350KV to 500KV	25	7.6
Over 500KV to 750KV	35	10.7
Over 750KV to 1000KV	45	13.7



Allow for platform movement, electrical line sway or sag and beware of strong or gusty winds.

Keep away from the machine if it contacts energized electrical lines. Personnel on the ground or in the platform must not touch or operate the machine until energized power lines are shut off.

Tip-over Hazards



DO NOT OVERLOAD

DO NOT exceed the maximum platform capacity. The weight of options and accessories will reduce the rated platform capacity and must be factored into the total platform load. Refer to the decals on the options or contact MEC.

Driving: DO NOT drive the machine on a slope that exceeds the maximum uphill or downhill slope rating. Slope rating applies to machines in the stowed position.

Driving in stowed position: Use extreme care and reduce speed when driving across uneven terrain, debris, unstable or slippery surfaces, and near holes or drop-offs.



DO NOT DRIVE ON UNEVEN OR UNSTABLE SURFACE WHEN THE PLATFORM IS ELEVATED OR EXTENDED

Driving with the platform elevated: DO NOT drive on or near uneven terrain, unstable surfaces, curbs, drop-offs or other hazardous conditions.

DO NOT elevate the platform when the machine is on a surface that is soft and / or on a slope.

STOP ALL MOVEMENT if the alarm sounds and the red Tilt Indicator Light illuminates when the platform is raised – see Tilt Indicator Light on page 23 for instructions.

Ensure that all tires are in good condition and lug nuts are properly torqued.



DO NOT PUSH OR PULL OBJECTS OUTSIDE PLATFORM

DO NOT push off or pull toward any object outside the platform.

Maximum Allowable Side Force: 100 lbs (445 N).

NEVER transport tools and materials unless they are firmly secured. Secure all tools and loose materials. DO NOT carry materials or tools on the guardrails. DO NOT allow tools, supplies or any items to extend outside the platform.



DO NOT ELEVATE IN GUSTY CONDITIONS OR WHEN WIND EXCEEDS 28 MPH (12.5 M/S)

DO NOT elevate the platform when wind speeds are in excess of 28 m.p.h. (12.5 m/s). If wind speeds exceed 28 m.p.h. (12.5 m/s) when the platform is elevated, carefully lower the platform and discontinue operation.

DO NOT increase the surface area of the platform (i.e. cover the rails with tarp or plywood). Increased surface area exposed to the wind will decrease machine stability.

NEVER modify or alter the work platform without written permission from MEC.

DO NOT attach overhanging loads or use the machine as a crane. Do not allow anything (hoses, cords, wires, ropes, etc.) to hang from the platform.



DO NOT USE AS CRANE

NEVER alter or disable any machine components.

DO NOT replace any part of the machine with anything except MEC-supplied or MEC-approved parts.

NEVER use ladders or scaffolds in the platform or allow them to touch any part of the machine.

NEVER use the machine on a moving or mobile surface or vehicle

Fall Hazards



DO NOT CLIMB ON RAILS

DO NOT sit, stand or climb on the platform guard rails. Maintain a firm footing on the platform floor at all times.

Keep the platform floor clear of debris.

DO NOT fasten a fall restraint lanyard to an adjacent structure.



DO NOT ENTER OR EXIT PLATFORM WHEN ELEVATED

Ensure that all gates are properly closed and secured before operating the machine.

Operators must comply with employer and job site rules and governmental regulations regarding the use of Personal Fall Protective Equipment.

DO NOT exit the platform when elevated

Collision Hazards



ALWAYS check over, under and around the machine for personnel, structures and obstructions before activating any control function and continue to watch for hazards while operating the machine.

Check path before moving for equipment, materials or other obstructions.

Check for overhead obstructions before moving.



DO NOT place the boom or platform against another structure.

Check path before moving for crushing hazards when holding the platform rail.

Reduce travel speed when moving the machine on slopes, when near personnel and obstocles, or when surface conditions are wet, slippery or otherwise limiting.



DO NOT operate in the path of any crane unless the controls of the crane have been locked out and/or precautions have been taken to prevent any possible collision.

Stunt driving and horseplay are PROHIBITED.

Check for personnel and obstructions below the platform when lowering the platform.

Additional Safety Hazards

Explosion and Fire Hazards

DO NOT operate the machine in hazardous locations or locations where potentially flammable or explosive gasses or particles may be present.

Damaged Machine Hazards

Conduct a thorough pre-start inspection of the machine and test all functions before each work shift to check for damage, malfunction and unauthorized modification. Tag and remove a damaged, malfunctioning or modified machine from service. DO NOT use a damaged, malfunctioning or modified machine.

Routine maintenance must be performed by the operator before each work shift. Scheduled maintenance must be performed by a qualified service technician at scheduled intervals. Tag and remove from service any machine that has not had scheduled preventative maintenance performed.

Check that all safety and instructional decals are in place and undamaged.

Check that the operator's, safety and responsibilities manuals are present in the storage container located in the platform. All manuals must be complete, undamaged and readable.

Bodily Injury Hazards

DO NOT operate the machine when there is a hydraulic fluid or air leak. Hydraulic fluid or air under pressure can penetrate and burn skin, damage eyes, and may cause serious injury, blindness, and death. Repair leaks immediately. Fluid leaks under pressure may not always be visible. Check for pin hole leaks with a piece of cardboard, not your hand.

All compartments must remain closed and secure during machine operation. Improper contact with components under any cover will cause serious injury. Only trained maintenance personnel should access compartments. The operator should only access a compartment when performing pre-operation inspection.

Weld Line to Platform Safety (if equipped)

Read, understand and follow all warnings and instructions provided with the welding power unit.

DO NOT connect weld leads or cables unless the welding power unit is turned off at the platform controls.

DO NOT operate unless the weld cables are properly connected.

DO NOT connect the ground lead to the platform. Do not use any part of the machine as a ground for welding.

DO NOT hang wires or cables over guardrails or suspend from the platform.

Battery Safety

Burn Hazards

Batteries contain acid. Always wear protective clothing and eye wear when working with batteries.

Avoid spilling or contacting battery acid. Neutralize battery acid spills with baking soda and water.

Explosion Hazard

Keep sparks, flame and lighted tobacco away from batteries. Batteries emit explosive gas.

Electrocution Hazard

Avoid contact with electrical terminals.

Component Locations

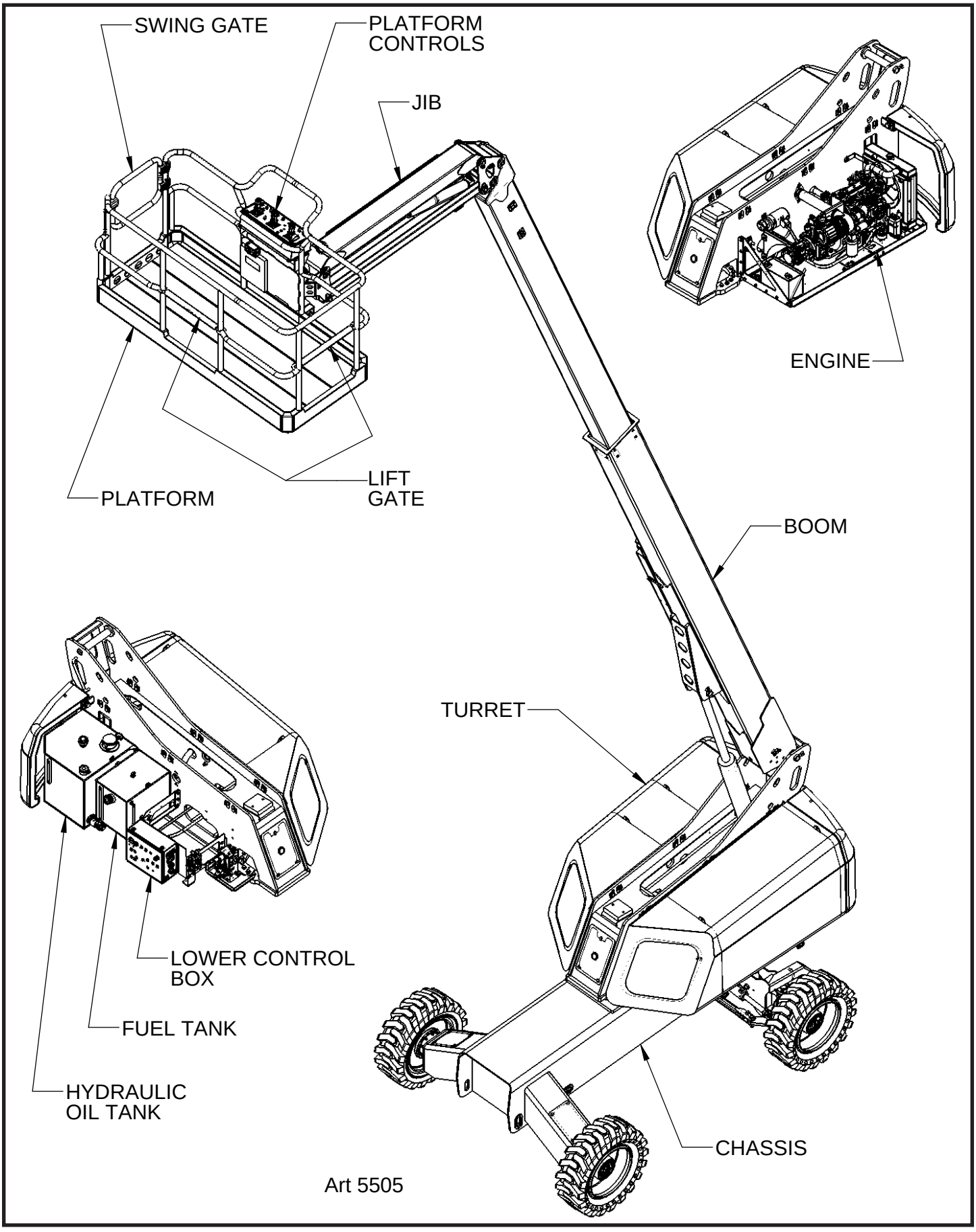

Art 5505

Platform Controls

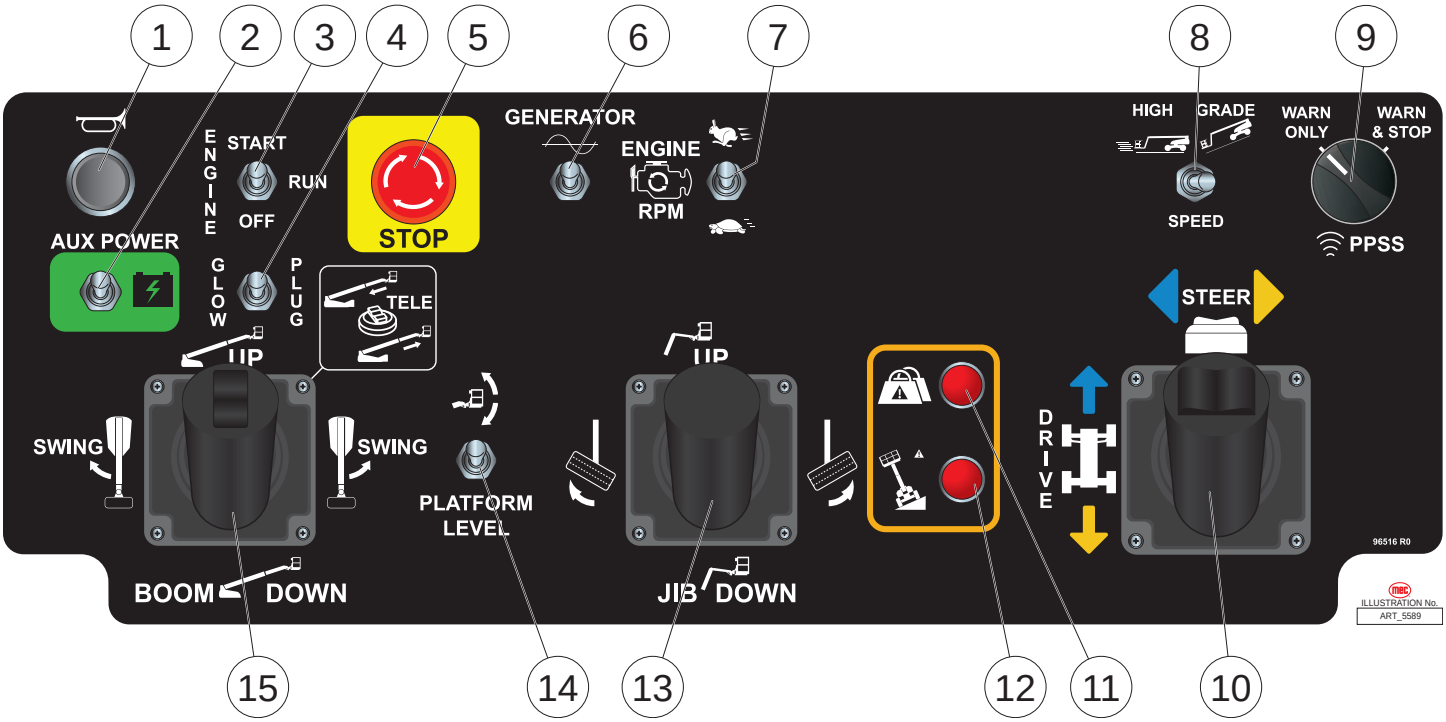

WARNING

ALWAYS check over, under and around the machine for personnel, structures and obstructions before activating any control function and continue to watch for hazards while operating the machine.

Control		Description
1	Horn Button	Press to sound warning horn.
2	Auxiliary Power	If normal power fails, press and hold while using Boom Retract and Boom Lower functions.
3	Start/Stop Switch	Move this switch up to start engine. Press this switch down to stop engine.
4	Glow Switch	Move this switch up to activate glow plugs prior to cold starting the engine.
5	Emergency Stop Switch	Press the EMERGENCY STOP switch at any time to stop all machine functions. Turn switch clockwise to reset.
6	Generator Switch (Optional)	Turn switch ON to engage optional AC generator. Generator switches off when any other function is enabled.
7	Engine Speed Select Switch	Use this switch to set the engine speed when functions are enabled. Setting this switch to low idle speed allows the operator to move the machine slowly and precisely. Move this switch up for high idle speed and fast function speed. Move this switch down for low idle speed and slow function speed.
8	Speed/Torque Switch	Move this switch to the left for high speed drive. Push this switch to the right for high torque drive.

9	PPSS Switch	Warn Only	When the PPSS first senses an object overhead it activates an intermittent audible alarm. The frequency of this alarm increases as the object comes closer to the sensors. Pay careful attention to the object the sensors have detected.
		Warn & Stop	If selected, the machine will stop when the warning alarm becomes continuous. Boom functions that elevate the platform are disabled; drive functions are disabled. Boom functions that lower the platform are allowed.
10	Drive/Steer Control Lever	Depending on the position of the turntable, the machine may move in unexpected directions when the Drive and Steer functions are activated. The color- and shape-coded arrows on the joystick decal correspond to similar arrow decals on the machine chassis. Be sure to check the arrows on the chassis before using the Drive or Steer functions.	
		Drive Function	Depress the enable bar on front of the control lever, then push the control lever forward or backward to drive the machine.
		Steer Function	Depress the enable bar on front of the control lever, then press the thumb switch on top of the control lever to steer left or right.
11	Overload Indicator Light	Light ON indicates too much weight on the platform. An audible alarm will sound and all machine function will stop. Remove weight from the platform to restore function and continue.	
12	Tilt Indicator Light	This light illuminates and an alarm sounds when the machine is not level. Follow the instructions on page 23 to safely lower the platform.	
13	Jib/Platform Control Lever	Jib Lift/Lower Function	Depress the enable bar on front of the control lever, then push the control lever forward to lift the jib. Depress the enable bar on front of the control lever, then pull the control lever backward to lower the jib.
		Platform Rotate Function	Depress the enable bar on front of the control lever, then push the control lever right to rotate the platform counterclockwise. Depress the enable bar on front of the control lever, then push the control lever left to rotate the platform clockwise.
14	Platform Level Switch	Press a Function Enable Button to enable this function, then press this switch up to manually level the platform upward or down to manually level the platform downward.	
15	Boom/Turntable Control Lever	Turntable Rotate Function	Depress the enable bar on front of the control lever, then push the control lever to the left to rotate the turntable clockwise or right to rotate the turntable counterclockwise.
		Boom Lift/Lower Function	Depress the enable bar on front of the control lever, then push the control lever forward to lift the boom. Depress the enable bar on front of the control lever, then pull the control lever back to lower the boom.
		Boom Extend/ Retract Function	Depress the enable bar on front of the control lever, then push the thumb switch on top of control lever back to extend the boom. Depress the enable bar on front of the control lever, then push the thumb switch forward to retract the boom.

Base Controls

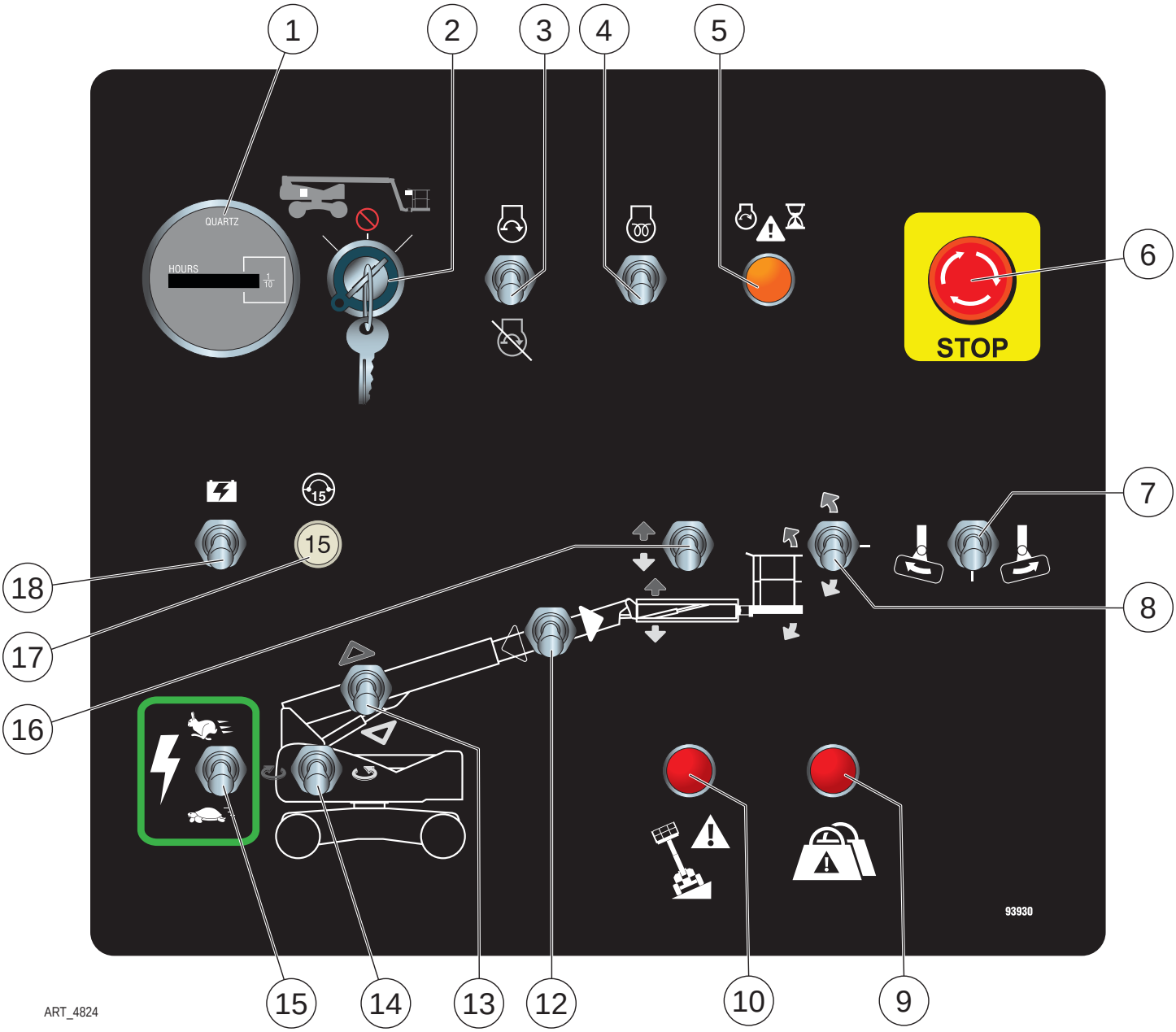

WARNING **ALWAYS check over, under and around the machine for personnel, structures and obstructions before activating any control function and continue to watch for hazards while operating the machine.**

Control		Description	
1	Hour Meter	Indicates total elapsed time of machine operation.	
2	Selector Switch	Platform	Select to operate from the platform control panel.
		Base	Select to operate from the base control panel.
		Off	Select to stop operation from either control panel.
3	Start/Stop Switch	Push switch up to start engine. Push switch down to stop engine.	
4	Glow Switch	Press this switch up to activate glow plugs prior to starting.	

5	Starter Time-out Indicator	When this red light is illuminated, the starter circuit is temporarily disabled. The starter circuit times out if the starter is run continuously for 15 seconds without the engine starting. The starter functions resets after approximately 30 seconds. Functions as Engine ECU Fault Code indicator.
6	Emergency Stop Switch	Press the EMERGENCY STOP switch at any time to stop all machine functions. Turn switch clockwise to reset.
7	Platform Rotate Switch	Press and hold the Function Enable Switch (#15), then move this switch left to rotate the platform clockwise. Press and hold the Function Enable Switch (#15), then move this switch right to rotate the platform counterclockwise.
8	Platform Level Switch	Press and hold the Function Enable Switch (#15), then move this switch up to manually level the rear of the platform upward. Press and hold the Function Enable Switch (#15), then move this switch down to manually level the rear of the platform downward.
9	Overload Indicator Light	Light ON indicates too much weight on the platform. An audible alarm will sound and all machine function will stop. Remove weight from the platform to restore function and continue.
10	Tilt Indicator Light	This light illuminates and an alarm sounds when the machine is not level. Follow the instructions on page 23 to safely lower the platform.
11	--	--
12	Boom Extend/ Retract	Press and hold the Function Enable Switch (#15), then move this switch right to extend the boom. Press and hold the Function Enable Switch (#15), then move this switch left to retract the boom.
13	Boom Lift/Lower	Press and hold the Function Enable Switch (#15), then move this switch up to lift the boom. Press and hold the Function Enable Switch (#15), then move this switch down to lower the boom.
14	Turntable Rotate	Press and hold the Function Enable Switch (#15), then move this switch left to rotate the turntable clockwise. Press and hold the Function Enable Switch (#15), then move this switch right to rotate the turntable counterclockwise.
15	Function Enable Switch	Press and hold this switch to enable boom, turntable and platform operations. Press down to operate the controls at slow speed. Press up to operate the controls at higher speed.
16	Jib Lift/Lower	Press and hold the Function Enable Switch (#15), then move this switch up to lift the jib. Press and hold the Function Enable Switch (#15), then move this switch down to lower the jib.
17	Circuit Breaker	Trips when there is excessive electrical load. Push to reset.
18	Auxiliary Power Switch	If normal power fails, press and hold while using boom retract and boom lower functions.

Workplace Inspection

DO NOT operate this machine until you have read and understood this manual, have performed the Workplace Inspection, Pre-Start Inspection and Routine Maintenance, and have completed all the test operations detailed in the Operating Instructions section.

Inspect the workplace and determine whether the workplace is suitable for safe machine operation. Do this before moving the machine to the workplace.

Be sure the lift is the correct machine for the job.

Be aware of workplace conditions, and continue to watch for hazards while operating the machine.

ELECTROCUTION HAZARD! THIS MACHINE IS NOT INSULATED!

DEATH OR SERIOUS INJURY will result from contact with or inadequate clearance from any electrically charged conductor.

DANGER

You must maintain a CLEARANCE OF AT LEAST 10 FEET (3.05 m) between any part of the machine, or its load, and any energized electrical line or apparatus carrying over 300 Volts up to 50,000 Volts. One foot (30.5 cm) additional clearance is required for every additional 30,000 Volts.

Observe Minimum Safe Approach Distance.

See page 5 for more information.

Workplace Inspection

Before operating the machine, check the workplace for all possible hazards, including but not limited to:

- Drop-offs or holes, including those concealed by water, ice, mud, etc.
- Sloped, unstable or slippery surfaces
- Bumps, surface obstructions and debris
- Overhead obstructions and electrical conductors
- Other objects or equipment
- Hazardous locations and atmospheres
- Inadequate surface and support to withstand all load forces imposed by the machine
- Wind and weather conditions
- The presence of unauthorized personnel
- Other possible unsafe conditions

Operating Instructions & Pre-Operation Function Tests

DO NOT operate this machine until you have read and understood this manual, have performed the Workplace Inspection, Pre-Start Inspection and Routine Maintenance, and have completed all the test operations detailed in the Operating Instructions section.

This section provides instructions and tests for each function of machine operation. Follow all safety rules and instructions. The operator must conduct inspections and a Functions Test of the machine before each work shift to check that all machine systems are working properly.

Test the machine on a firm level surface with no debris, drop-offs, potholes or overhead obstructions. Perform each step outlined in this section.

This machine shall only be operated by trained and authorized personnel. If multiple operators use this machine, all must be trained, qualified and authorized to use it. New operators must perform a Pre-Start Inspection and Functions Test prior to operating the machine.

Operators must comply with all employer and job site rules and governmental regulations regarding the use of personal protective equipment – see Fall Protection on page 3.

DO NOT use a machine that is malfunctioning. If any function does not perform as described, tag the machine and remove for repair by a qualified service technician. After repairs are completed, a Pre-Start Inspection and Functions Test must be performed before using the machine.

WARNING

ALWAYS check over, under and around the machine for personnel, structures and obstructions before activating any control function and continue to watch for hazards while operating the machine.

Prestart



ART_3353

Perform *Prestart Inspection* (see page 37).

Check Emergency Stop Switches at both the base and platform controls – turn clockwise to reset.

Starting Engine from Base Controls

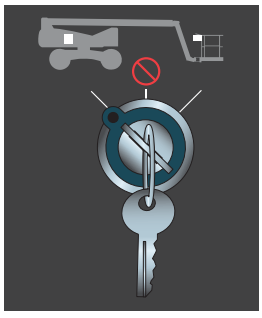

ART_4714

Be sure that the upper and lower EMERGENCY STOP Switches are reset.

Lower Control Box: Turn Key Switch to CHASSIS.



ART_4722

Move the Start/Stop switch upward to start. Release the switch when the engine starts.

Cold Start: Move and hold the Glow Switch up as indicated in the Preheat table.



ART_4723

With the Glow switch held up, press and hold the Start/Stop switch upward until the engine starts.

Release both switches once the engine starts.

Preheat Table

Ambient Temperature	Preheat Time
Above 50°F (10°C)	5 Seconds
50°F to 23°F (10°C to –5°C)	10 Seconds
Below 50°F (–5°C)	20 Seconds
20 Seconds = Limit of Continuous Use	



This light has 2 functions.

1. To protect the starter motor, power cuts off to the starter circuit when the starter motor has run continuously for 10 seconds without starting the engine. The Starter Circuit Cutout indicator light on the Lower Controls Box will turn on during this time. Power to the starter circuit reengages after 30 seconds.
2. Functions as Engine ECU Fault Code indicator. The light will Flash Engine Fault Code.

Starting Engine from Platform Controls

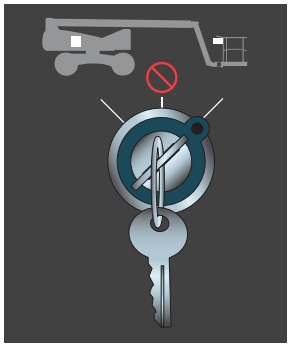

ART_4721

Lower Control Box: Turn the Key Switch to PLATFORM.

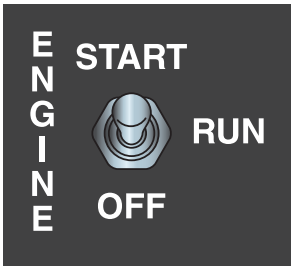

ART_4725

Platform Control Box: Move the Start/Stop switch UP to start. Release the switch when the engine starts.

Cold Start: Move and hold the Glow Switch up as indicated in the Preheat table.

With the Glow switch held up, press and hold the Start/Stop switch UP until the engine starts.

Release both switches once the engine starts.

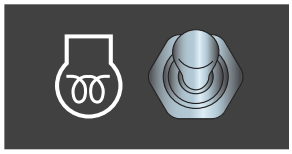

ART_4726

Preheat Table

Ambient Temperature	Preheat Time
Above 50°F (10°C)	5 Seconds
50°F to 23°F (10°C to –5°C)	10 Seconds
Below 50°F (–5°C)	20 Seconds
20 Seconds = Limit of Continuous Use	

To protect the starter motor, power will cut off to the starter circuit when the starter motor has run continuously for 15 seconds without starting the engine. The Starter Circuit Cutout indicator light will turn on at the Base Control panel and power to the starter circuit will cut out for 30 seconds.

Base Controls Operation & Pre-Operation Functions Test

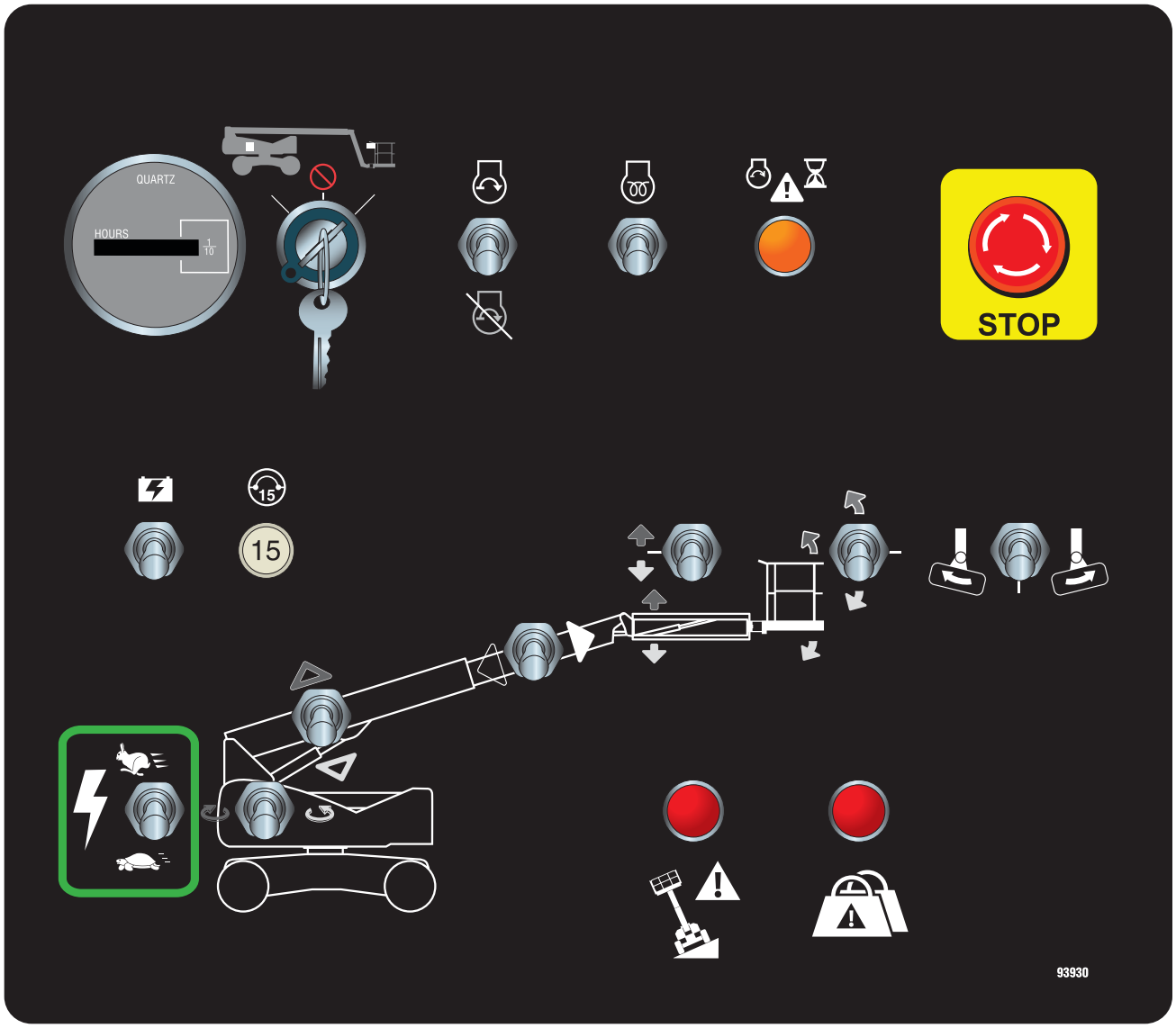

ART_4824

WARNING

ALWAYS check over, under and around the machine for personnel, structures and obstructions before activating any control function and continue to watch for hazards while operating the machine.

Emergency Stop



ART_3353

Press the Emergency Stop Switch at any time to stop all machine functions.

Turn switch clockwise to reset.

Depress the EMERGENCY STOP switch whenever the machine is not in operation. Turn switch clockwise to reset.

Select BASE Operation

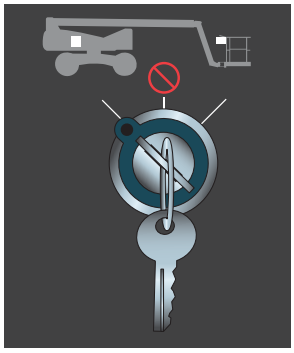

ART_4714

Turn the Selector Key Switch to BASE.

Function Enable



ART_4715

Press and hold this switch to enable and operate machine functions from the base controls.

Press down to operate the controls at slow speed.

Press up to operate the controls at higher speed.

Releasing this switch will disable machine functions.

DANGER **Do not elevate the platform if the machine is not on a firm level surface.**

Base Control Boom/Platform Functions

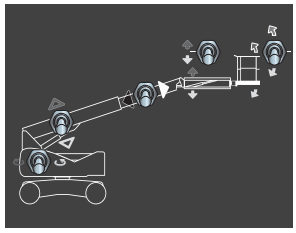

ART_4716

Boom Extend/Retract

Move and hold the Extend/Retract switch on the base control panel to extend or retract the boom.

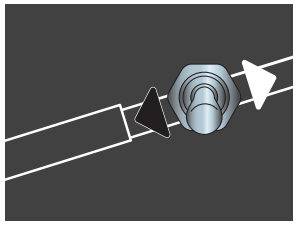

ART_4717

Test Operation

- Press and hold the Function Enable switch.
- Extend boom until it stops. Boom should extend to maximum length.
- Retract the boom until it stops. Boom should retract to minimum length.
- Releasing the switch will stop boom extension or retraction.
- Pressing the Emergency Stop Switch will stop boom extension or retraction.

Boom Lift/Lower

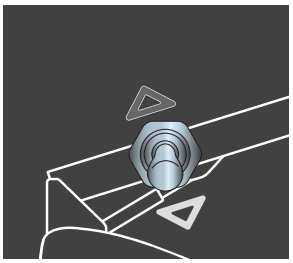

ART_4718

Press and hold the Boom Lift/Lower switch on the base control panel to lift or lower the boom.

Test Operation

- Press and hold the Function Enable switch.
- Raise the boom until it stops.
- Lower the boom until it stops. Boom should rest on the turntable pad.
- Releasing the switch will stop Boom Lift/Lower function.
- Pressing the Emergency Stop Switch will stop boom lift/lower function.

Jib Lift/Lower

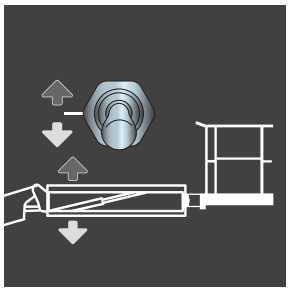

ART_4720

Press and hold the Jib Lift/Lower switch on the base control panel to lift or lower the jib.

Test Operation

- Press and hold the Function Enable switch.
- Raise the jib until it stops.
- Lower the jib until it stops.
- Releasing the switch will stop Jib Lift/Lower function.
- Pressing the Emergency Stop Switch will stop jib lift/lower function.

Platform Level

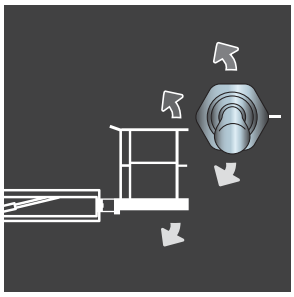

ART_4719

The platform will automatically level as the boom is lifted or lowered. The Platform Level function allows manual level adjustment of the platform. Manual leveling may be used to adjust the platform within 5° of level.

- Press and hold the Platform Level switch on the base control panel to manually adjust the level of the platform.

Test Operation

- Press and hold the Function Enable switch.
- Push the switch up and down.
- The platform level should change accordingly. Releasing the switch will stop platform level function.
- Pressing the Emergency Stop Switch will stop platform level function.

Platform Rotate



ART_4720

Press and hold the Platform Rotate switch on the base control panel to rotate the platform.

Test Operation

- Press and hold the Function Enable switch.
- Push the switch left and right. The platform should rotate accordingly.
- Releasing the switch will stop platform rotate function.
- Pressing the Emergency Stop Switch will stop platform rotate function.

Tilt Indicator Light

DANGER **STOP ALL MOVEMENT if Tilt Alarm sounds.**

Light ON and alarm sounding indicates an unsafe condition.

- STOP ALL MOVEMENT. The machine is not level.
- Look at the diagram to determine the condition of the counterweight as it relates to the slope, then use extreme caution while following the instructions. DO NOT rotate the turntable while lowering.

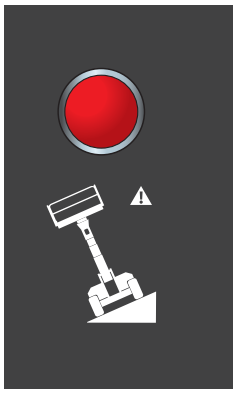

ART_3337b

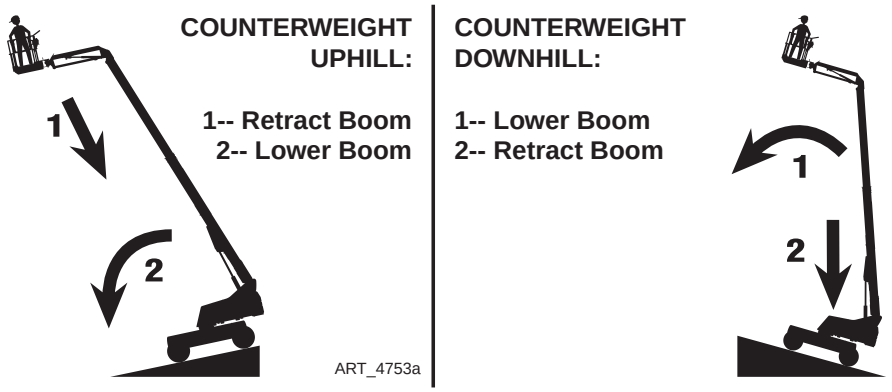

- If the Tilt Alarm sounds while the counterweight is uphill, first retract the boom, then lower the boom.
- If the Tilt Alarm sounds while the counterweight is downhill, first lower the boom, then retract the boom.
- Move the machine to a firm, level surface before continuing operation.

Overload Light and Alarm

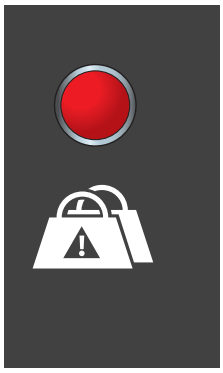

ART_3528

- Light ON indicates too much weight on the platform.
- An audible alarm will sound and all machine function will stop.
- Remove weight from the platform to restore function and continue.

Platform Control Operation & Pre-Operation Functions Test

Personnel Entry Gates

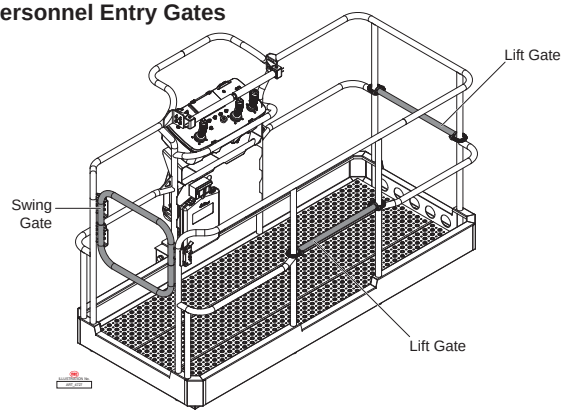

Entering The Platform

Personnel shall enter and exit the platform only at the Personnel Entry Gates, and only when the boom is fully retracted and lowered.

Ensure that all Personnel Entry Gates are properly closed and that the Swing Gate is latched in the closed position before operating the machine.

Secondary Guarding

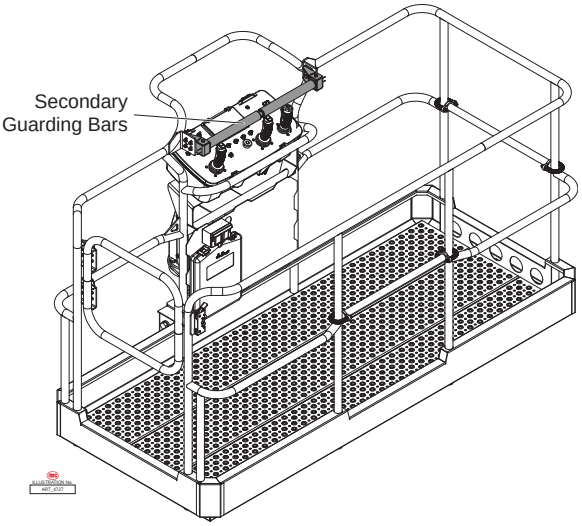

1. As a safety feature, there are 2 yellow colored swinging bars positioned above the Platform controls. If one or both bars are pushed forward, all machine functions will stop immediately sounding an alarm.
2. If at any time one or both bars are depressed, evaluate the instance that caused the actuation and proceed accordingly with choice 3 or 4.
3. To reset the system, allow the bars to return to the natural centered position, return all control handles to neutral position and release all enable trigger switches. Normal operation may be resumed.
4. To enable limited operation while one or both bars are depressed, push up and hold the Auxiliary Power switch (see illustration to right). While holding the Auxiliary Power switch, select the desired function and operate it in the normal procedure. Certain lift functions such as Riser Boom Up, Main Boom Up, and Telescope out are not available in this Bypass mode.

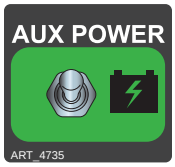

Auxiliary Power Switch

Fall Protection

Personal fall protection equipment (PFPE) is required when operating this machine.

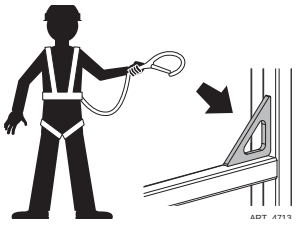

All PFPE must comply with employer and job site rules and applicable governmental regulations, and must be inspected and used in accordance with the PFPE manufacturer's instructions.

ALWAYS wear approved fall protection, properly attached to a designated anchor point, when operating the machine.

DO NOT attach more than one lanyard per anchor point.

Platform Control Panel

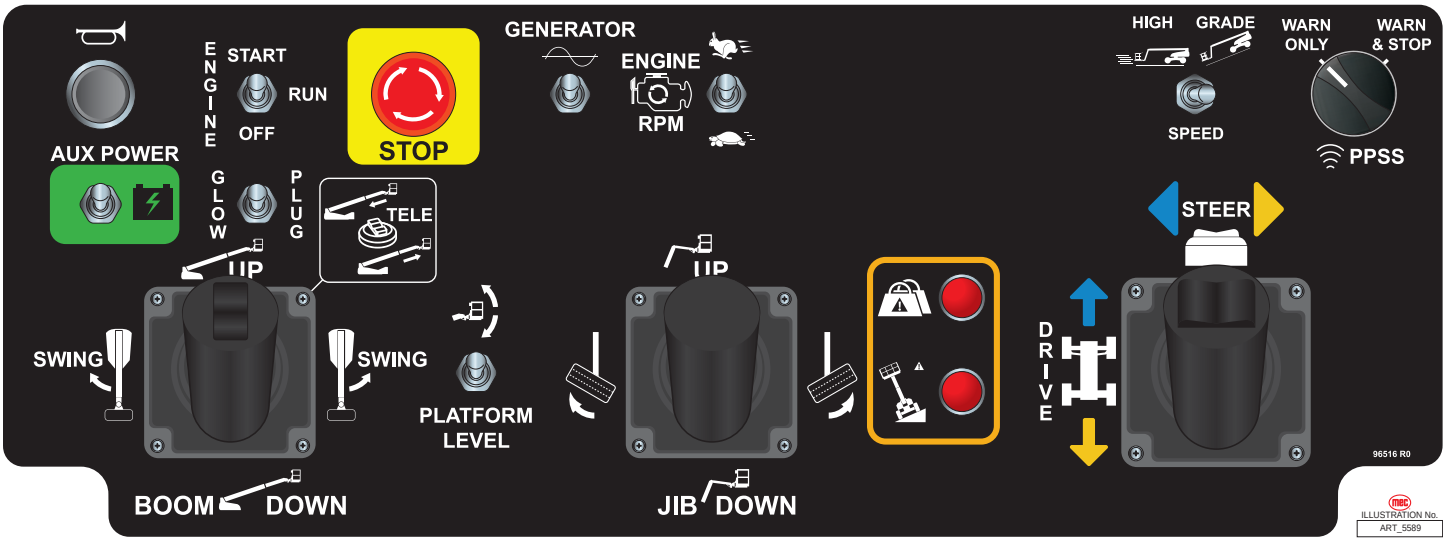

WARNING

ALWAYS check over, under and around the machine for personnel, structures and obstructions before activating any control function and continue to watch for hazards while operating the machine.

DO NOT hang anything over any control handle at any time.

Function Enable At Platform Controls

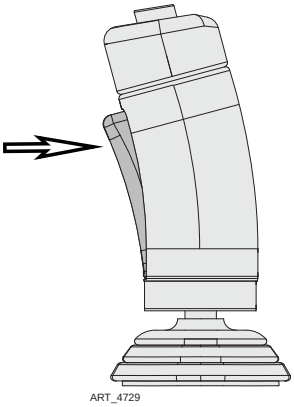

Note: If any Function Enable trigger or button is depressed for seven (7) seconds without any function being activated, the Enable System times out and deactivates. Release the trigger or button and reengage to activate the Function Enable System.

The Drive function and most boom functions are enabled by squeezing the trigger at the front of the appropriate control handle.

Platform Operations Test

Emergency Stop



ART_3353

Press the EMERGENCY STOP switch at any time to stop all machine functions.

Turn switch *clockwise* to reset.

Depress the EMERGENCY STOP switch whenever the machine is not in operation. Turn switch *clockwise* to reset.

Activation of the EMERGENCY STOP switch will apply brakes immediately.

WARNING

This will cause sudden platform movement as the machine comes to an abrupt stop.

Brace yourself and secure objects on the platform during operation of machine.

Select PLATFORM Operation

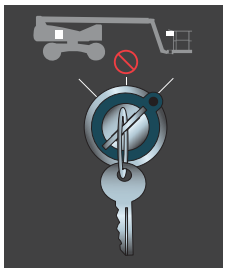
ART_4721

Base Controls: Turn the selector switch to PLATFORM.

Glow Plugs

Cold Start: Move and hold the Glow Switch up as indicated in the Preheat table.

With the Glow switch held up, press and hold the Start/Stop switch upward until the engine starts.


ART_4723

Release both switches once the engine starts.

Preheat Table

Ambient Temperature	Preheat Time
Above 50°F (10°C)	5 Seconds
50°F to 23°F (10°C to –5°C)	10 Seconds
Below 50°F (–5°C)	20 Seconds
20 Seconds = Limit of Continuous Use	

Operate from Platform

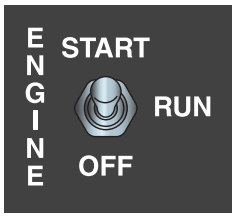

ART_4725

Enter the platform through one of the personnel entry gates. Close and secure the entry.

Press the Start/Stop switch UP to start. Release the switch when the engine starts.

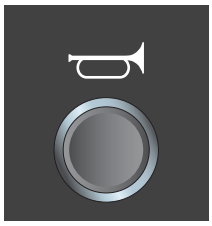
ART_3359

Press the Horn Button to verify proper operation.

Tilt Indicator Light

DANGER **STOP ALL MOVEMENT if Tilt Alarm sounds. Death or Serious Injury may occur.**

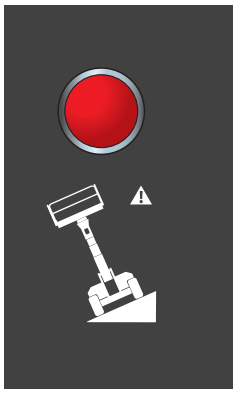
ART_3337b

Light ON and alarm sounding indicates an unsafe condition.

- STOP ALL MOVEMENT. The machine is not level.
- Look at the diagram to determine the condition of the counterweight as it relates to the slope, then use extreme caution while following the instructions. DO NOT rotate the turntable while lowering.

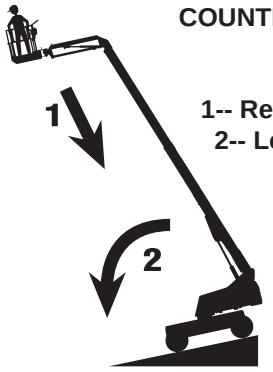

ART_4753a

COUNTERWEIGHT UPHILL:

1-- Retract Boom
2-- Lower Boom

COUNTERWEIGHT DOWNHILL:

1-- Lower Boom
2-- Retract Boom

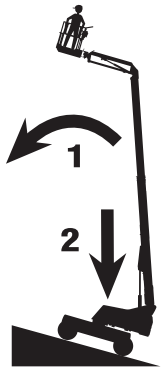

- If the Tilt Alarm sounds while the counterweight is uphill, first retract the boom, then lower the boom.
- If the Tilt Alarm sounds while the counterweight is downhill, first lower the boom, then retract the boom.
- Move the machine to a firm, level surface before continuing operation.

Overload Light and Alarm

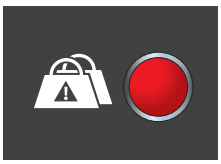
ART_3529

- Light ON indicates too much weight on the platform.
- An audible alarm will sound and all machine function will stop.
- Remove weight from the platform to restore function and continue.

Drive Control Lever Operation

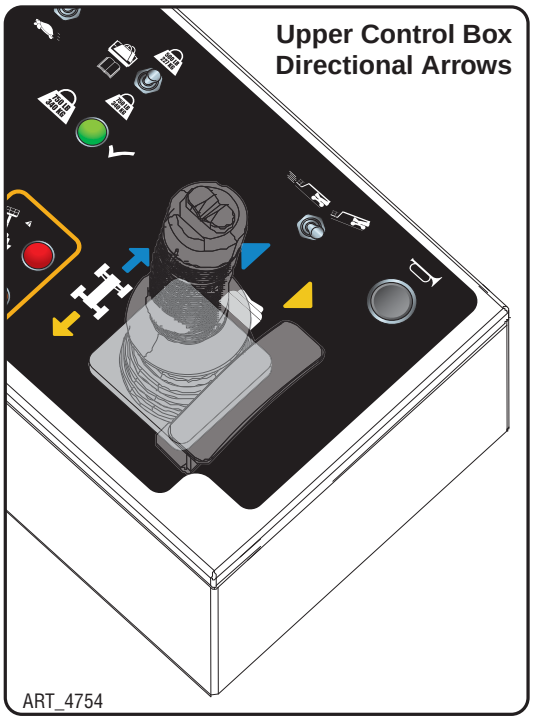

Depending on the orientation of the boom and chassis, the Drive and Steer functions may move the machine in directions opposite of the motion of the control lever. The color- and shape-coded arrows on the control lever decal correspond to similar arrow decals on the machine chassis (see illustrations). Be sure to check the arrows on the chassis before activating and using the Drive or Steer functions.

- Drive Function speed is proportional and is controlled by the position of the control lever. The further it is moved from the neutral (center) position, the faster the speed will be.
- When the boom is elevated or extended out of the stowed position, the maximum drive speed is reduced to 0.5 mph (0.8 km/h). Drive function speed is still fully proportional to the position of the drive control handle.
- The control lever returns to the neutral (center) position when released.
- Steering Function is not proportional.

Note: The Steering Function does not automatically return the steering wheels to the centered position. Always check the position of the steering wheels before and during machine operation.

Test Operation

- **Drive:** Squeeze the enable trigger, then move the control lever in the desired direction of movement. The further it is moved from the neutral (center) position, the faster the speed will be.
- **Stop:** Return the control lever to the neutral (center) position. Releasing the control lever will also stop the machine. Releasing the trigger will result in a rapid stop.
- Extend the boom approximately 3 feet (1 m), then drive the machine. Speed should be reduced significantly from the fully-retracted, fully-lowered speed. Retract the boom.
- Elevate the boom approximately 10°, then drive the machine. Speed should be reduced significantly from the fully-retracted, fully-lowered speed. Lower the boom.
- **Steering:** Squeeze the enable trigger, then press the thumb switch on top of the control lever to steer in the desired direction.

Note: The Steering Function does not automatically return the steering wheels to the centered position. Stay alert to the position of the steering wheels before and during machine operation

Drive & Steer Directional Arrows

Pay careful attention to the Chassis Drive & Steer arrows for machine direction.

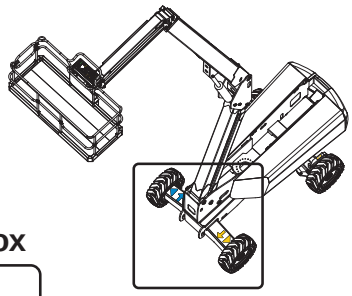

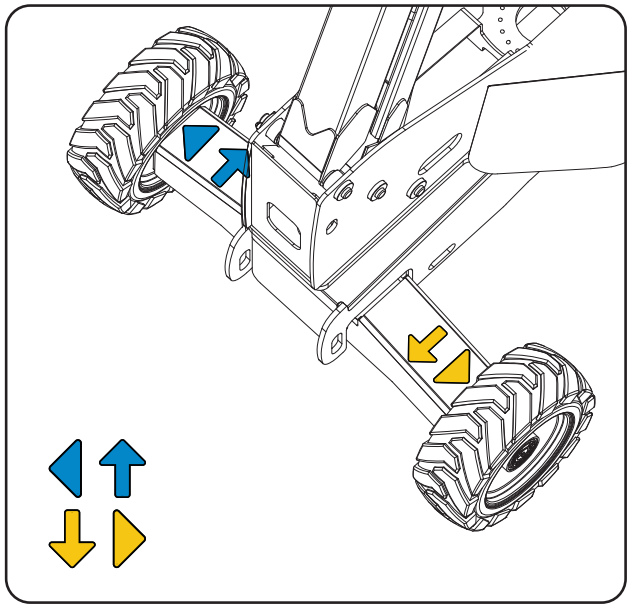

Platform over non-steering wheels

Upper Control Box

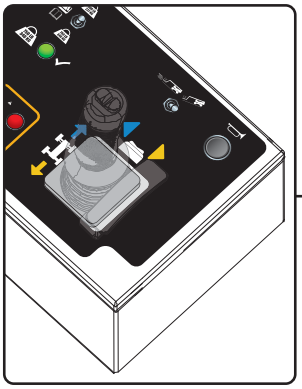

Platform over steering wheels

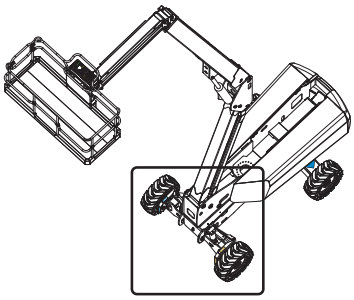

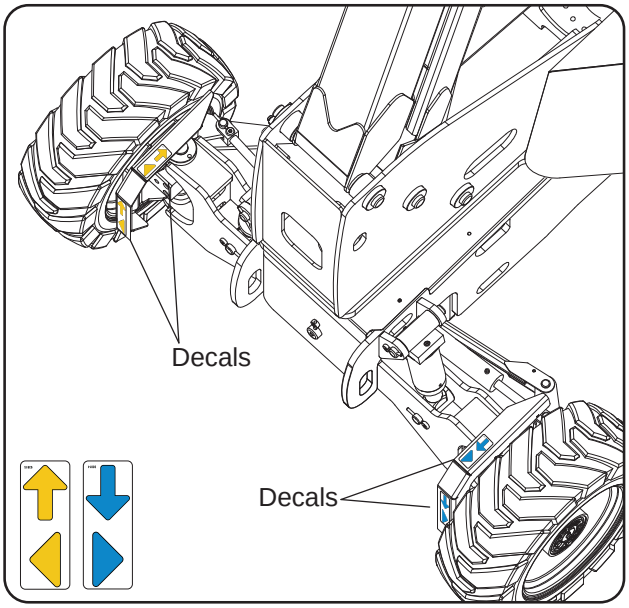

When the platform is over the steering wheels, the machine moves in the opposite direction of the Control Lever.

ART_4747

Speed/Torque Switch

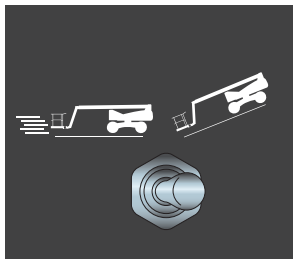

Move this switch to the left for high speed drive. Move this switch to the right for high torque drive.

ART_4757

Engine Speed Select

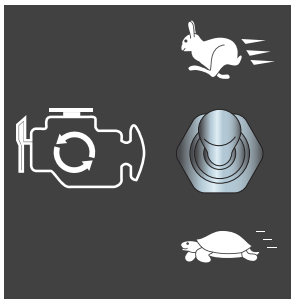

ART_4755

Use this switch to set the engine speed when functions are enabled. Setting this switch to low idle speed allows the operator to move the machine slowly and precisely.

Move this switch up for high idle speed and fast function speed.

Move this switch down for low idle speed and slow function speed.

Boom Functions Control Lever

This control lever controls the Boom Extend/Retract, Boom Lift/Lower and Turntable Rotate functions. The control lever is fully proportional for the Boom Lift/Lower and Turntable Rotate functions.

These functions are enabled by pressing the trigger on the front of the control lever.

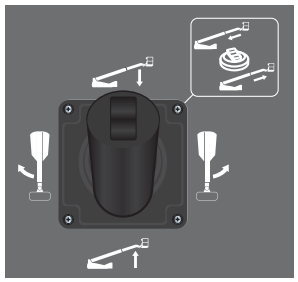

ART_4731

Test Operation

- **To test the Boom Extend/Retract function:**
  - Squeeze the enable trigger, then press and hold the thumb switch on top of the control lever rearward until the boom reaches full extension.
  - Squeeze the enable trigger, then press and hold the thumb switch forward to retract the boom.
- **To test the Boom Lift/Lower function:**
  - Squeeze the enable trigger, then push the control handle forward to lift the boom. Lift the boom completely.
  - Squeeze the enable trigger, then pull the control handle back to lower the boom. Lower the boom to its stowed position.
- **To test the Turntable Rotate function:**
  - Squeeze the enable trigger, then push the control handle to the left to rotate the turntable clockwise.
  - Squeeze the enable trigger, then push the control handle to the right to rotate the turntable counterclockwise.

Platform Level Switch

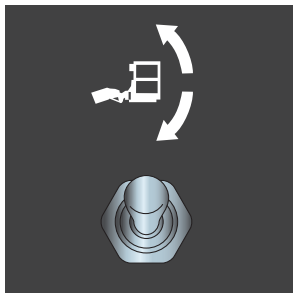

ART_4732

The platform will automatically level as the boom is lifted or lowered. The Platform Level function allows manual level adjustment of the platform. Manual leveling may be used to adjust the platform within 5° of level.

Test Operation

- **To test the Boom Extend/Retract function:**
  - Press and hold the Function Enable button.
  - Push the Platform Level switch up or down to adjust the position of the platform.
  - Platform Level power is disabled upon exceeding 5° out of level when out of the stowed position. Power is allowed only to the direction that returns the platform toward level.

Platform/Jib Functions Control Lever

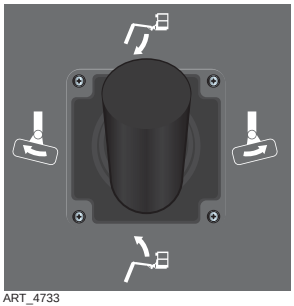
ART_4733

The Platform/Jib Functions control lever controls the Platform Rotate and Jib Lift/Lower functions. The control lever is fully proportional for both functions.

These functions are enabled by pressing the trigger on the front of the control lever.

Test Operation

- **To test the Jib Lift/Lower function:**
  - Squeeze the enable trigger, then push the control lever forward to raise the jib.
  - Squeeze the enable trigger, then pull the control lever back to lower the jib.
- **To test the Platform Rotate function:**
  - Squeeze the enable trigger, then push the control lever left to turn the platform clockwise.
  - Squeeze the enable trigger, then push the control lever right to turn the platform counter clockwise.

Shutdown Procedure

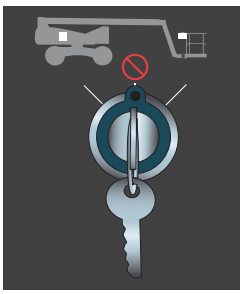
ART_4734

When finished with the machine, place the platform in the stowed position.

Park the machine on a level surface.

Turn the Selector Key Switch to the OFF position and remove the key to prevent unauthorized use. Always put the switch in OFF position when leaving the machine at the end of the work day.

Carefully exit the platform using a constant three (3) point dismount/grip.

Auxiliary Power System & Test

If primary power fails while the platform is elevated, use the Auxiliary Power System to safely lower the platform.

WARNING

Do not climb down the boom assembly or exit the platform while elevated.

ALWAYS check over, under and around the machine for personnel, structures and obstructions before activating any control function and continue to watch for hazards while operating the machine.

Platform Controls

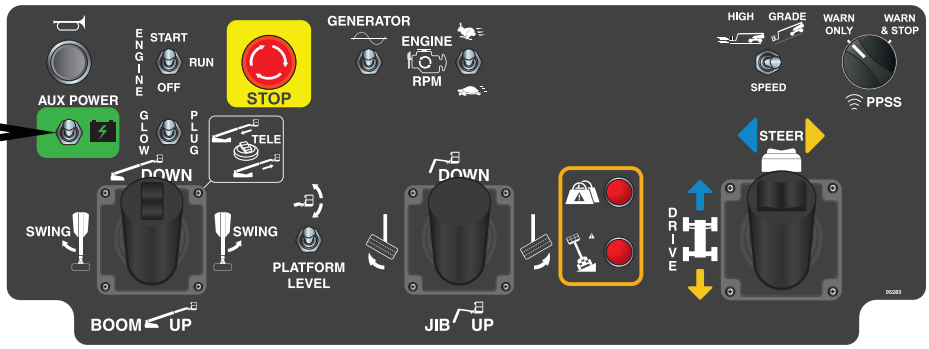

Upper Auxiliary Power Switch

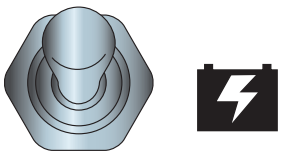

Auxiliary Power Switch

Base Controls

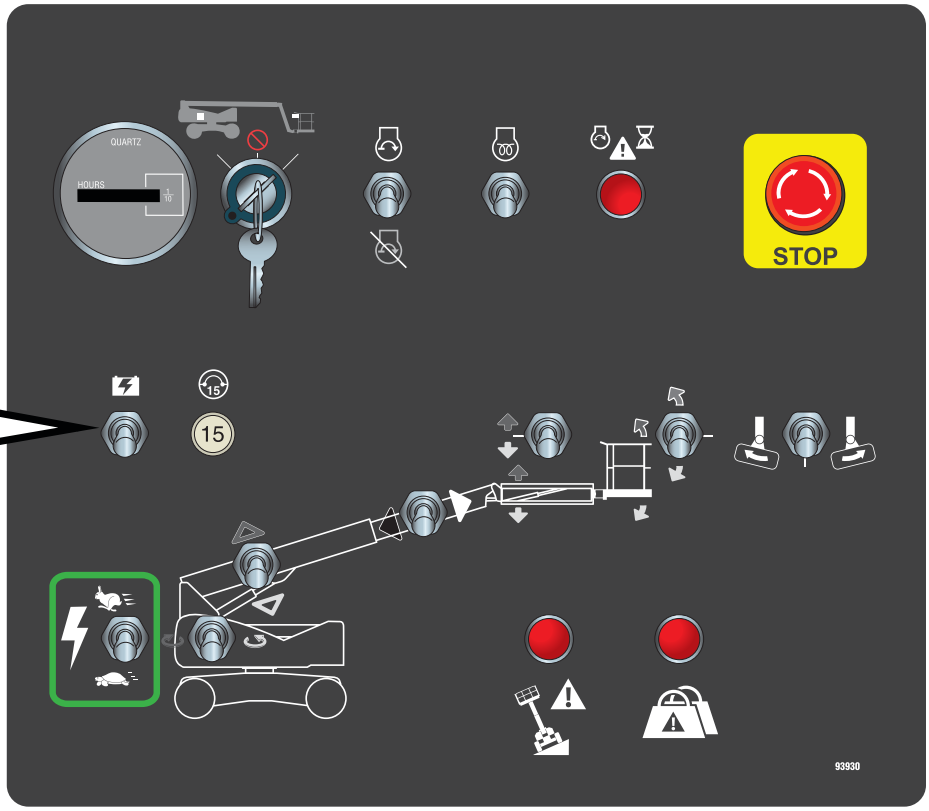

Lower Auxiliary Power Switch

ART_4735

The Auxiliary Power System is used to lower the platform in case of primary power failure. To lower the platform, activate the Auxiliary Power Switch to run the auxiliary hydraulic pump.

This function uses battery power from the auxiliary battery to lower the platform.

- Push and hold the Auxiliary Power Switch, then use the Boom Extend/Retract function to retract the boom.
- Continue to hold the Auxiliary Power Switch, then use the Boom Lift/Lower function to lower the boom.

Note: Auxiliary Power activation stops the engine.

Note: The Auxiliary Power Switch serves as an enable switch. It is not necessary to use the primary function enable switch.

Test Operation

- Test the Auxiliary Power System from both control stations.
- Test any lift function for 5-10 seconds to verify proper operation.

Machine Inspections and Maintenance

DO NOT operate this machine until you have read and understood this manual, have performed the Workplace Inspection, Pre-Start Inspection and Routine Maintenance, and have completed all the test operations detailed in the Operating Instructions section.

Tag and remove a damaged, malfunctioning or modified machine from service. DO NOT use a damaged, malfunctioning or modified machine.

Use the Pre-Start Inspection to determine what Routine Maintenance is required. The operator may perform only the routine maintenance items specified in this manual.

IMPORTANT — Scheduled maintenance inspection checklists are included in this manual for use only by qualified service technicians. Only qualified service technicians may perform repairs to the machine. After repairs are completed, the operator must perform a Pre-Start Inspection before proceeding to the Functions Test.

DANGER

Hydraulic fluid under pressure can penetrate and burn skin, damage eyes, and may cause serious injury, blindness, and death. Repair leaks immediately. Fluid leaks under pressure may not always be visible. Check for pin hole leaks with a piece of cardboard, not your hand.

WARNING

NEVER perform work under the boom assembly with the platform elevated without first supporting the boom assembly.

Failure to perform scheduled maintenance at recommended intervals may result in injury or death. Keep maintenance records current and accurate.

Immediately report any damage, defect, unauthorized modification or malfunction to your supervisor. Any defect must be repaired prior to continued use. DO NOT use a damaged, modified or malfunctioning machine.

DO NOT hang anything over any control handle at any time.

CAUTION

Never leave hydraulic components or hoses open. Plug all hoses and fitting immediately after disassembly to protect the system from outside contamination (including rain).

Never open a hydraulic system when there are contaminants in the air.

Always clean the surrounding area before opening hydraulic systems.

Use only recommended lubricants. Improper lubricants or incompatible lubricants may cause as much damage as no lubrication.

CAUTION

Watch for makeshift “fixes” which can jeopardize safety as well as lead to more costly repair.

Inspection and maintenance should be performed by qualified personnel familiar with the equipment.

Supporting The Boom Assembly

WARNING **NEVER perform work under the boom assembly with the platform elevated without first supporting the boom assembly.**

DO NOT work beneath the boom assembly with the platform elevated unless the boom assembly is properly supported.

Use a sling and overhead hoist rated for 3 tons (2700 kg) or more.

Wrap a sling under the outer end of the boom as shown below. Connect it to the overhead hoist, then lift enough that the weight of the boom assembly is being supported by the hoist.

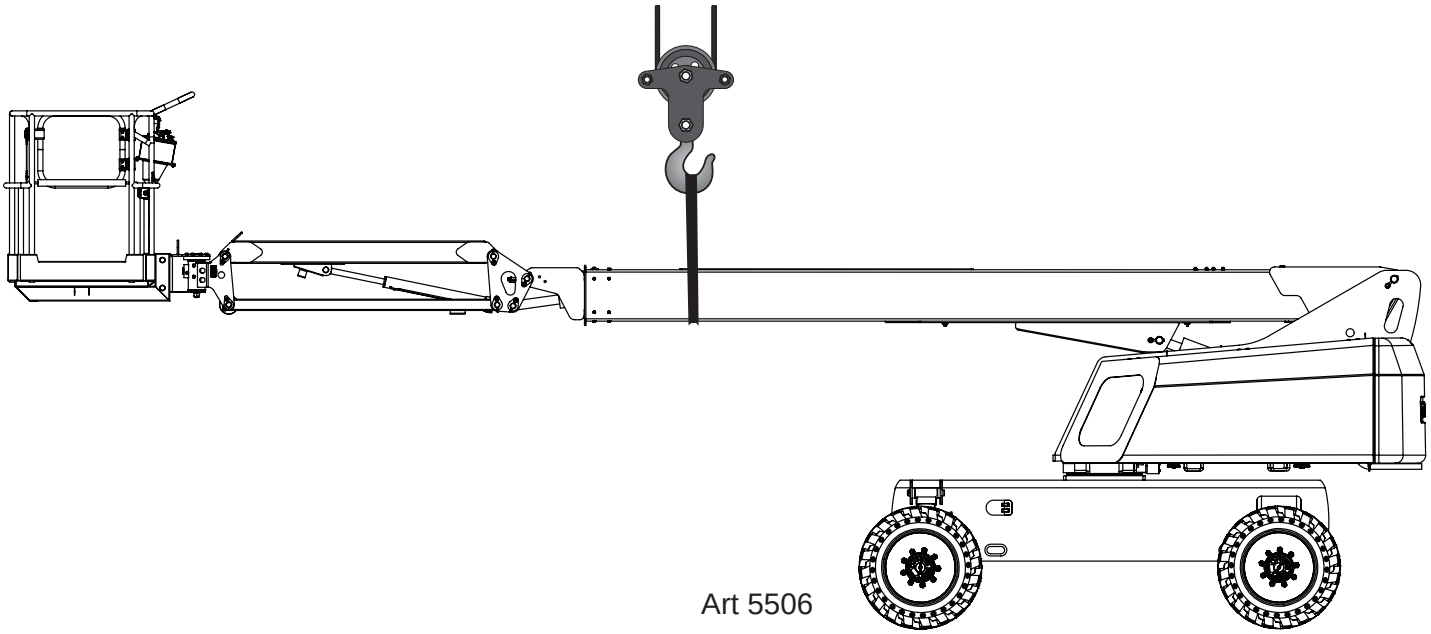

Art 5506

Pre-Start Inspection Checklist

The operator must conduct a Pre-Start Inspection of the machine before each work shift.

DO NOT use a damaged or malfunctioning machine.

Initial	Description
	Check that the operator's manual and manual of responsibilities are in the storage container located on the platform.
	Perform a visual inspection of all machine components. Look for missing parts; torn or loose hoses; hydraulic fluid leaks; loose, torn or disconnected wires; damaged tires; etc.
	Check all structural components of the machine for cracked welds, corrosion and collision damage.
	Check the security and condition of the lanyard attachment points.
	Check all controls for any damage and proper function.
	Check all hoses and the cables for worn or chafed areas.
	Check the platform rails and sliding mid-rail entries for damage or modification. Check the swing gate for proper operation and latching.
	Check that all warning and instructional decals are legible and secure.
	Check the tires for damage.
	Check the tire pressure (not required for foam filled tires).
	All structural components, pins and fasteners are present and properly tightened.
	Check for fluid leaks.
	Check hydraulic fluid level (check with platform fully lowered).
	Check engine oil level.
	Check engine coolant level at overflow bottle.
	Check fuel tank level.
	Secure all covers, panels and hoods.
	Ensure that all gates are properly closed and secured before operating the machine.

Frequent Inspection Checklist

WARNING

This checklist must be used at 3-month intervals or every 150 hours of machine use, whichever occurs first. Failure to do so could result in death or serious injury.

Frequent Maintenance Inspections should be conducted by qualified service technicians only. Photocopy this page for reuse. Keep inspections records up to date. Record and report all discrepancies to your supervisor.

Model Number _____ Serial Number _____ Hour Meter Reading _____

Initial	Description
	Perform all checks listed on Pre-Start Inspection.
	Replace engine oil and filter after the first 100 hours of service.
	See Kubota engine operator's manual for other engine maintenance information.
	Inspect the condition of hydraulic fluid in the reservoir. Oil should be a clear amber color.
	Check battery electrolyte level and connections.
	Check wheel lug nuts for proper torque (see Specifications).
	Check if tires are leaning in or out.
	Inspect all structure and pivot points for signs of wear and/or damage.
	Check the pin joints and retaining rings for security.
	Inspect the entire machine for signs of damage, broken welds, loose bolts, improper or makeshift repairs.
	Check that the platform does not drift down with a full load.
	Check all wire connections for tightness and corrosion.
	Check the operation speeds to ensure they are within specified limits (see Specifications).
	Check the Auxiliary Power System.
	Clean and lubricate all push button switches with dry lubricant and ensure that the switches operate freely in all positions.
	Check the tightness of the platform frame and the linkage pins.
	Check the overall platform and guardrail component security.
	Check the electrical mounting and hardware connections for security.
	Check the steering kingpins for excessive play.

Additional maintenance requirements for severe conditions

	If the machine is used in very dusty, exceptionally hot or exceptionally cold conditions, replace hydraulic filter element and air filter element (under normal conditions replace every 6 months or 300 hours, whichever comes first).

Date _____ Inspected By _____

Annual Inspection Report

Aerial Platform Sales Corp
1401 South Madera Avenue, Kerman, California 93630, USA
Tel: 559.842.1500 **Toll Free:** 1.877.632.5438 **Fax:** 559.842.1520
Email: info@MECawp.com **Web:** www.MECawp.com

"Y"	Yes/Acceptable
"N"	No/Unacceptable
"R"	Repaired
"U"	Unnecessary/Not Applicable

Date	
Serial Number	
Model Number	
Date of Last Inspection	
Date Placed in Service	

Customer	
Street	
City/State/Zip	
Phone Number	
Contact	

Dealer	
Street	
City/State/Zip	
Phone Number	
Contact	

	Y	N	R	U		Y	N	R	U		Y	N	R	U
Decals:					Base:					Operation:				
Proper Placement/Quantity					Cover Panels Secure					Wires Tight				
Legibility					Base Fasteners Tight					Switches Secure				
Correct Capacity Noted					Bolts Tight					All Functions Operational				
Rails:					Front Hub Mounting (4WD)					Auxiliary Power Operational				
All Rail Fasteners Secure					Rear Hub Mounting (4WD)									
Entry Gate Closes Properly					Front Axle/Front Wheel Assemblies:					Slow Speed Proximity Switch:				
Manual/Safety Data In Box					Wheel Motors-Mounting Secure					Set Properly				
Platform:					Wheel Motors-Leaks					Proximity Switches Adjusted				
Platform Bolts Tight					Lug Nuts Torqued Properly					Oil Filter Secure/Chg				
Platform Structure					Steering Cylinder Pins Secure					Oil Level Correct/Chg				
All Decals Present And Legible					Swing Bearing Lubed					Steering Pressure Set				
					Wheel Assemblies:					Drive Pressure Set				
					Brakes Operational					Lift Pressure Set				
					Wheel Motors-Mounting Secure					Engine:				
Wire Harnesses:					Wheel Motors-Leaks					Engine Mounts Tight				
Mounted Correctly					Lug Nuts Torqued Properly					Fuel Lines Secure				
Physical Appearance					Axle Lock Operational					Fuel Lines Free Of Leaks				
110/220V Outlet Safe/Working										Fuel Tanks Secure				
Elevating Assembly:					Component Area:					Fuel Shut Off Valves Func.				
Boom Structures					Valve Manifold(s) Secure					All Shields/Guards In Place				
Welds					Hoses Tight/No Leaks					Oil Level				
Retaining Rings					D/C Mtr(s) Secure/ Operational					Oil Filter				
Cylinder Pins Secure					Contactors Secure					Air Filter				
Boom Shimming					Pump Secure									
Torque on Slew Ring Bolts					Batteries:					Operator's Manual Present:				
					Secure					Manual Of Responsibilities Present:				
					Fully Charged					Overload Sensing System:				
					Emergency Stop:					Test for proper operation; Recalibrate if it fails to cut functions and sound alarm at more than 105% of rated load.				
					Breaks All Circuits									

Signature/Owner-User: _____ Date: _____

Signature/Mechanic: _____ Date: _____

Routine Maintenance

IMPORTANT — The operator may perform only maintenance items on the Pre-Start Inspection Checklist. Frequent and Annual maintenance must be performed by qualified service technicians.

Pre-Start Inspection — Perform routine maintenance as identified in the Pre-Start Inspection Checklist on page 37.

Frequent and Annual Maintenance

Frequent Inspection Checklists and Annual Inspection Reports must be completed by qualified service technicians trained and authorized to perform maintenance on this machine, and must be done in accordance with the procedures outlined in the service manual. Scheduled maintenance inspection checklists are included in this manual for use by qualified service technicians.

Machines that have been out of service for more than three months must have the Frequent Inspection Checklists completed before returning to service.

Lubrication

Operator may perform routine maintenance only. Lubrication listed as Scheduled Maintenance must be performed by a qualified service technician.

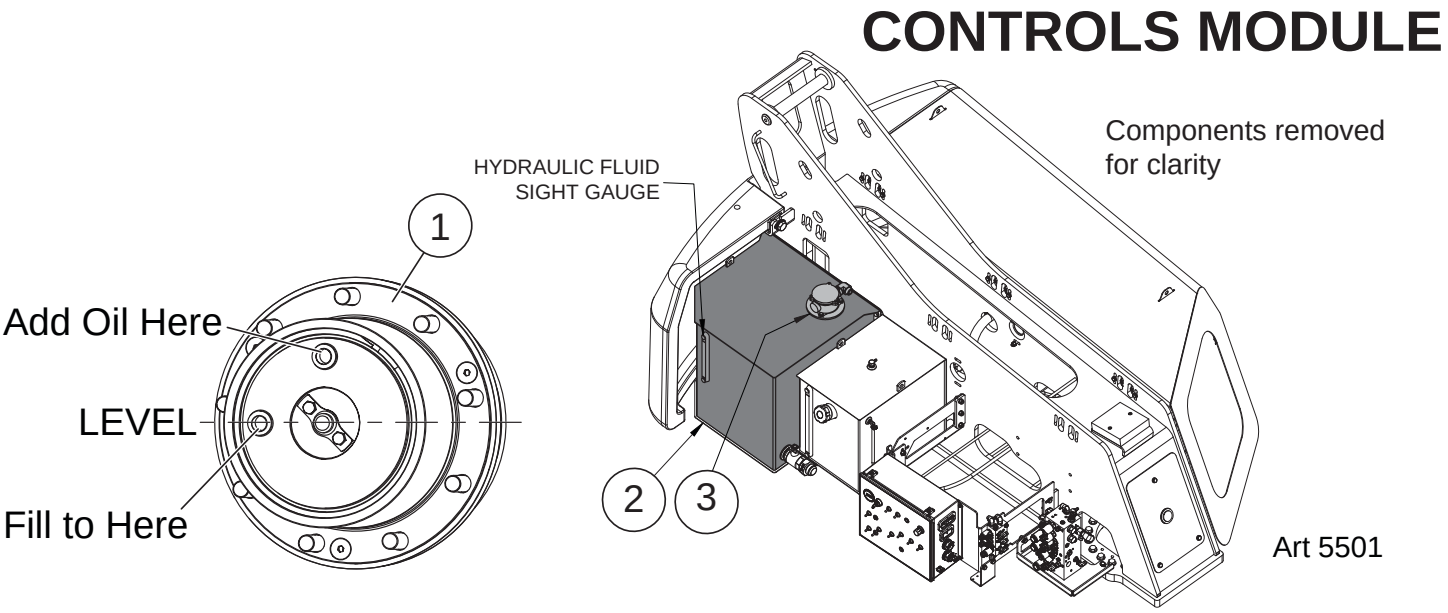

Lubrication

No.	Item	Specification	Frequency
1	Hubs	SAE 90 Multipurpose Hypoid Gear Oil API Service Classification GL5	**Scheduled Maintenance** Check every three months or 150 hours, whichever occurs first. Change yearly or every 600 hours, whichever occurs first.
2	Hydraulic Reservoir	**Fluid Type** / **Temperature Range** ISO Grade 32 Tractor Transmission Hydraulic Oil or Chevron Rando Premium MV: > 30° F (0° C) / < 30° F (0° C) Do not substitute other fluids as pump damage may result. Fill to the middle of the sight gauge with platform in the stowed position and stabilizers retracted.	**Routine Maintenance** Check level daily **Scheduled Maintenance** Change yearly or every 600 hours, whichever occurs first
3	Hydraulic Filter	Filter Element (located inside Hydraulic Reservoir)	**Scheduled Maintenance** **Normal Conditions** Change every six months or 300 hours, whichever occurs first **Severe Conditions -- very dusty, exceptionally hot or exceptionally cold conditions** Change every three months or 150 hours, whichever occurs first

Troubleshooting

WARNING

Should you experience erratic operation or notice any malfunction while operating this machine, discontinue use immediately.

Call for assistance and report the incident to your supervisor, and do not use the machine until it has been checked by a trained, qualified mechanic.

Machine functions will not operate

- Adequate fuel supply?
- Proper fuel blend (i.e. winter blend in cold weather)?
- Battery properly connected?
- Battery fully charged?
- Circuit Breaker tripped?
- Function toggle switch or the Enable Switch not activated?
- Selector Key Switch in proper position?
- Both Emergency Stop Switches reset?
- Hydraulic fluid level low?
- Obvious fluid leak or damaged component?
- Wires disconnected, broken, or loose?
- GP400 Diagnostic LED OFF?
  - LED should be ON. If not ON or FLASHING, refer to Service & Parts Manual or contact MEC Technical Support
- Error code at Onboard Diagnostic Center?
  - See Troubleshooting section in the service chapter of the Service & Parts Manual or contact MEC Customer Service.

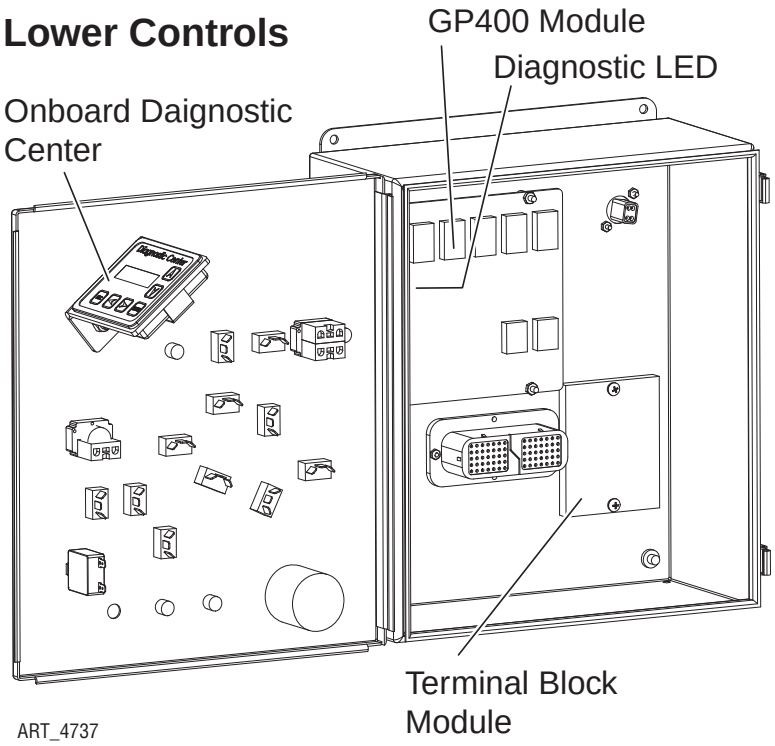

Warning and Instructional Decals

Control Side, Module Door Closed

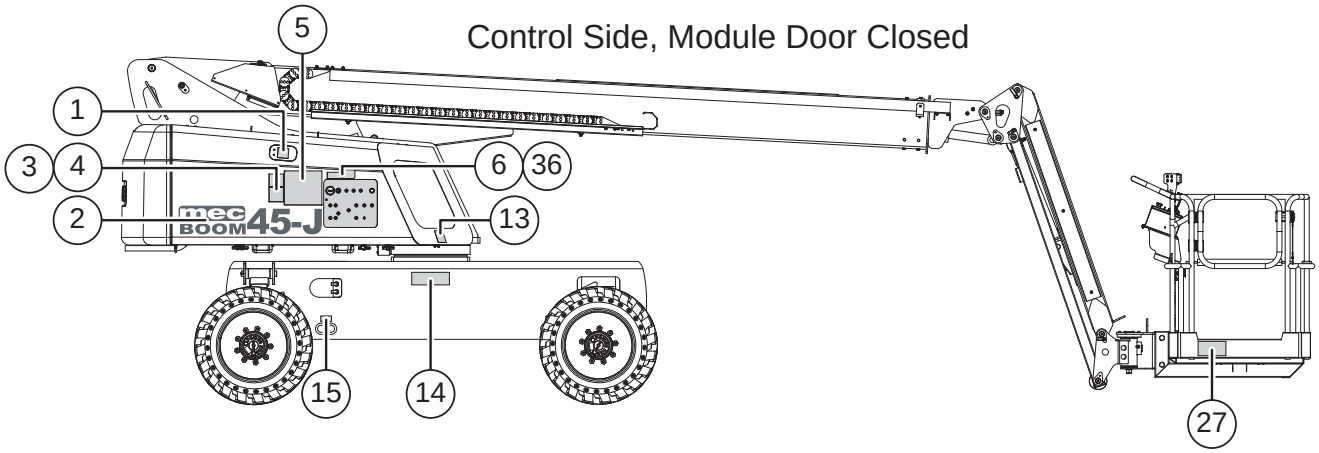

Control Side, Module Door Removed

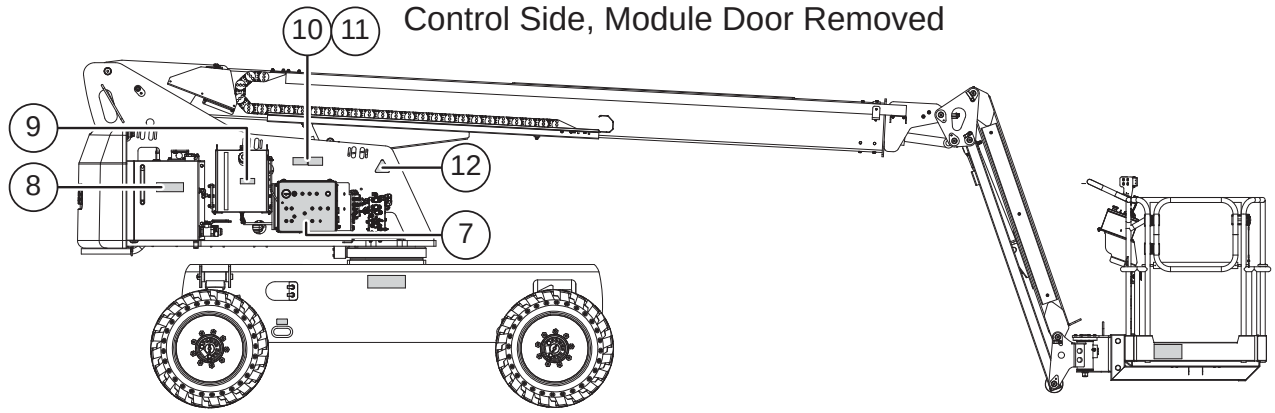

Engine Side, Module Door Closed

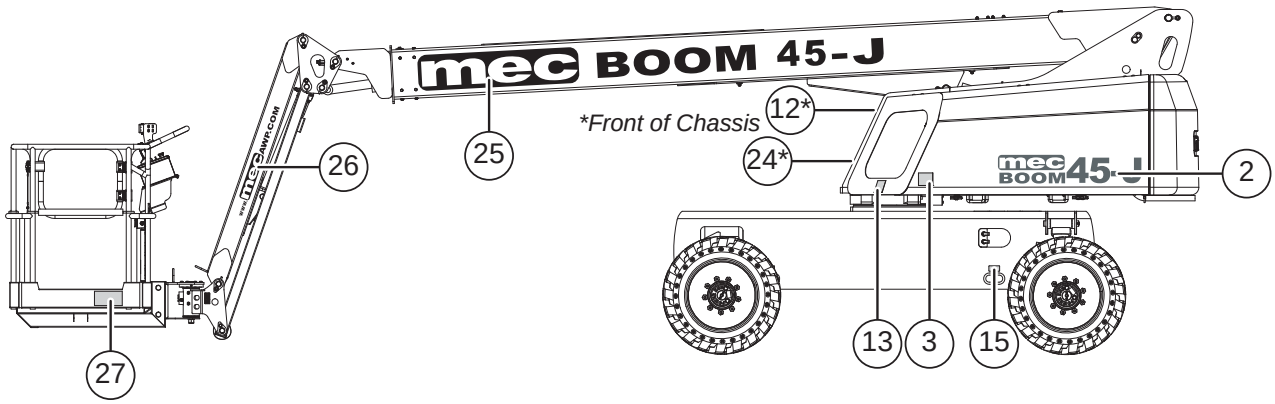

Engine Side, Module Door Removed

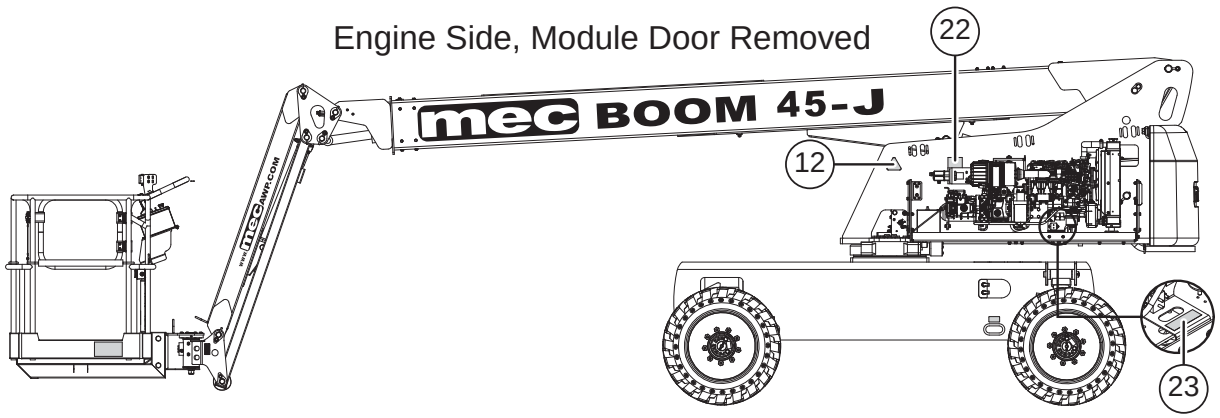

Front Side

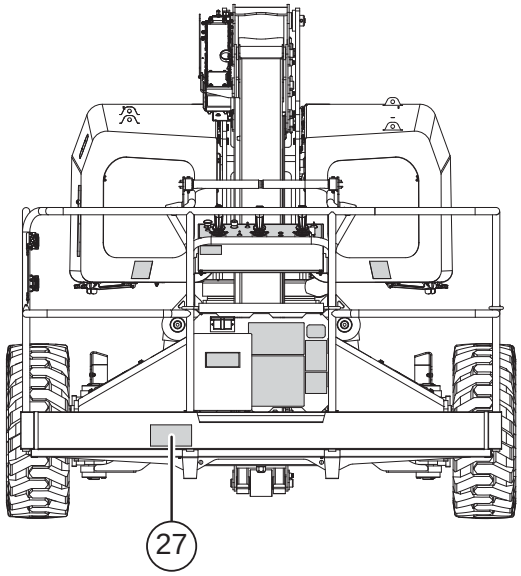

Rear Side

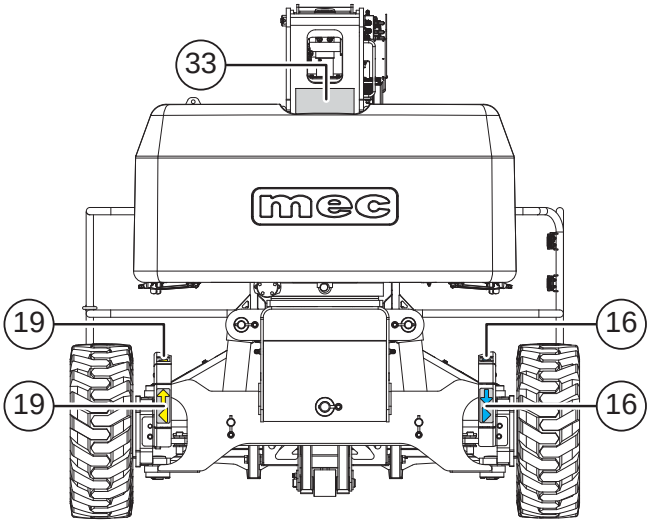

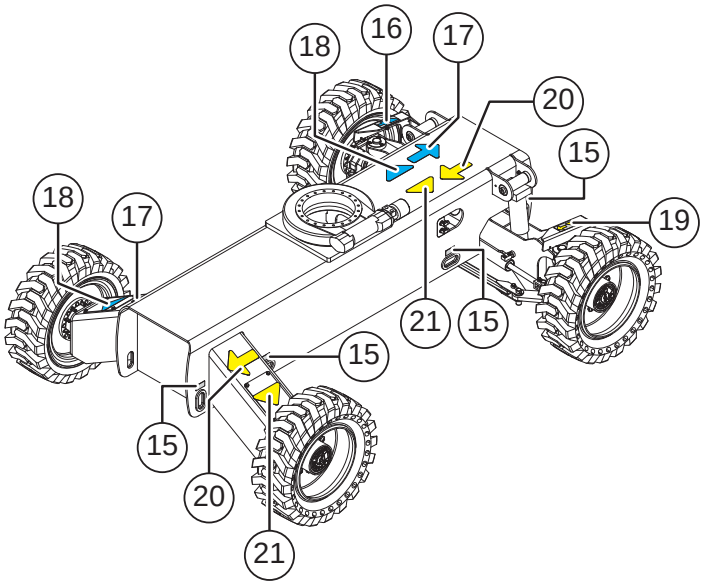

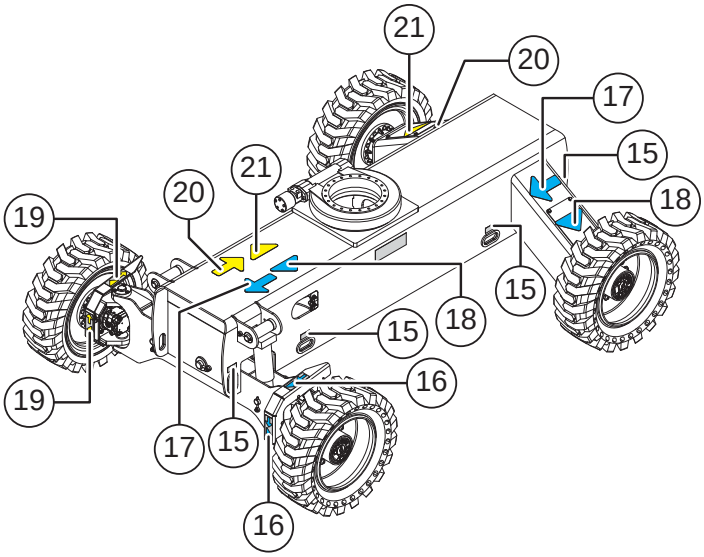

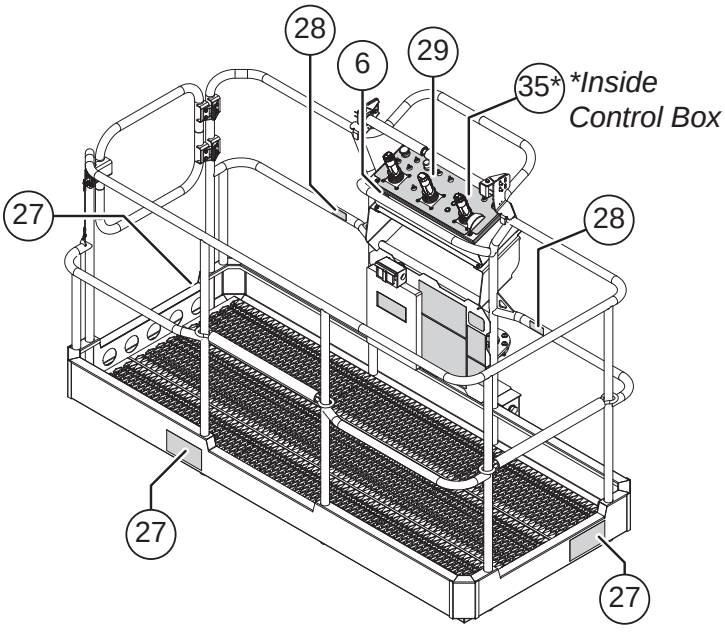

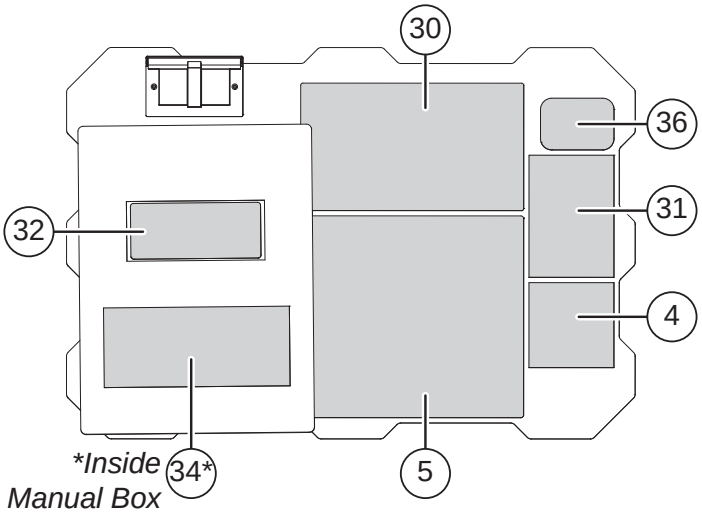

1  93182 Qty. - 1	2  94851 Qty. - 1	3  93801 Qty. - 2	4  93807 Qty. - 2	5 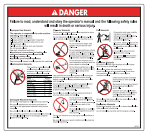 93755 Qty. - 2
6 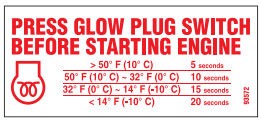 93572 Qty. - 2	7 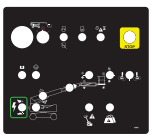 93930 Qty. - 1	8  92117 Qty. - 1	9  9378 Qty. - 1	10  90732 Qty. - 1
11  93805 Qty. - 1	12  91850 Qty. - 3	13  93804 Qty. - 2	14 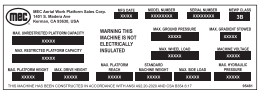 95481 Qty. - 1	15 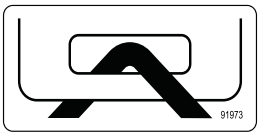 91973 Qty. - 8
16  93814 Qty. - 2	17  91971 Qty. - 2	18  91981 Qty. - 2	19  93815 Qty. - 2	20  91972 Qty. - 2
21  91982 Qty. - 2	22  93806 Qty. - 1	23  92119 Qty. - 1	24  90751 Qty. - 1	25  94850 Qty. - 1
26  92416 Qty. - 1	27 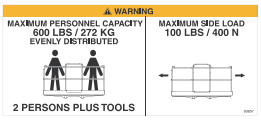 93857 Qty. - 3	28  91970 Qty. - 2	29 To Serial #14700199  93688 Qty. - 1	30 From Serial #14700199  95283 Qty. - 1
Reverse Joysticks 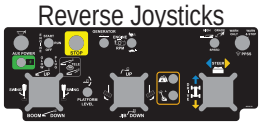 96516 Qty. - 1	30 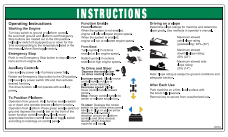 93754 Qty. - 1	31 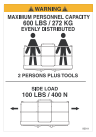 93911 Qty. - 1	32 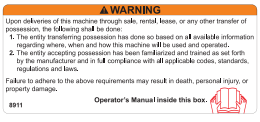 8911 Qty. - 1	33  90719 Qty. - 1
34  90718 Qty. - 1	35  92236 Qty. - 1	36  95266 Qty. - 2		

Serial Plate Location

The serial plate is attached to the machine at the time of manufacture. Important information about the machine is recorded on the serial plate. The Serial Plate is located on the side of the chassis below the Base Controls.

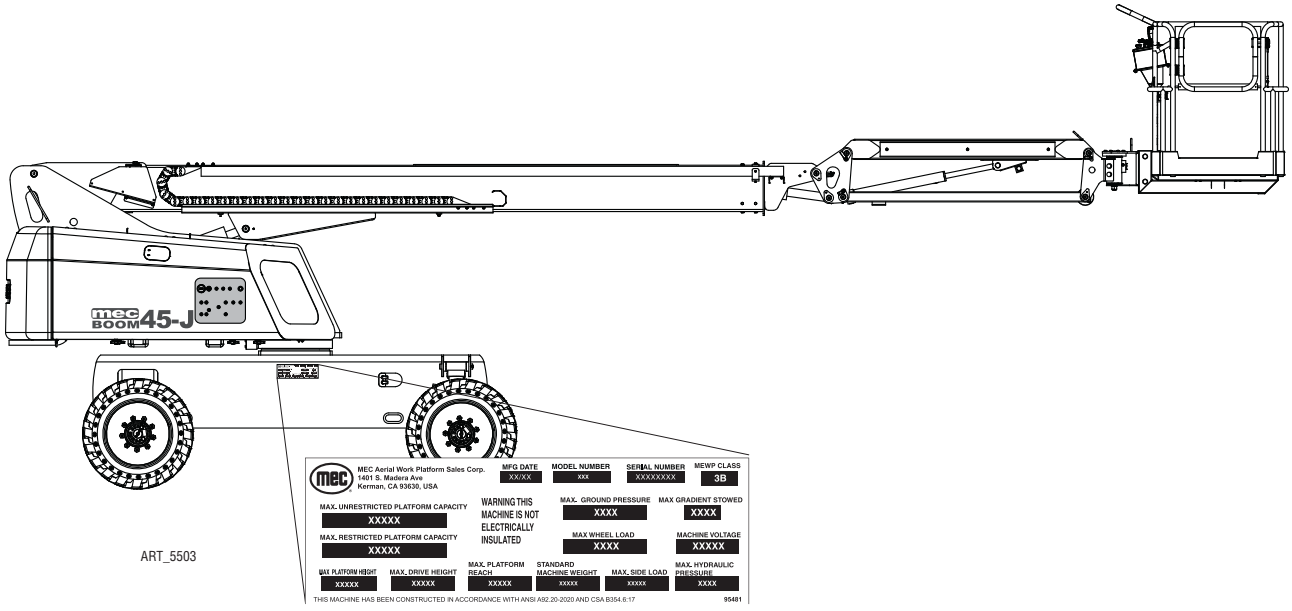

Serial Plate Description

MFG DATE Month / Year of manufacture

MODEL NUMBER Identifies the machine.

SERIAL NUMBER Identifies a machine with reference to its original owner. Refer to the number when requesting information or ordering parts.

MODEL YEAR Identifies the model year of the machine.

MAX. PLATFORM UNRESTRICTED CAPACITY The maximum safe load (material, persons + equipment) which can be correctly placed on the platform within any range of motion.

MAX. HYDRAULIC SYSTEM PRESSURE The maximum pressure generated by the machine's hydraulic system.

MAX. WHEEL LOAD The maximum safe weight applied to each wheel. Calculated with all available options installed. Fw = 30% (Wm + Wc + Wopt)

MACHINE VOLTAGE The electrical voltage at which the machine operates.

MAX. PLATFORM HEIGHT The maximum attainable height measured from level ground surface to platform floor.

MAX. DRIVE HEIGHT The maximum safe platform height at which the machine can be driven.

MAX. PLATFORM REACH The maximum horizontal outreach of the extended boom.

STANDARD MACHINE WEIGHT The weight of the machine with no options.

MAX. GROUND PRESSURE The amount of pressure exerted on the surface at each wheel. Calculated with all available options installed. Pmax = 30% (Wm + Wc + Wopt) / Contact Area

MAX. SIDE LOAD The maximum safe force that the occupant can exert laterally on an object outside the platform.

Transport and Lifting Instructions

Safety Information

This section is provided for reference and does not supersede any government or company policy regarding the loading, transport or lifting of MEC machinery.

WARNING

Truck drivers are responsible for loading and securing machines, and should be properly trained and authorized to operate MEC machinery. Drivers are also responsible for selecting the correct and appropriate trailer according to government regulations and company policy. Drivers must ensure that the vehicle and chains are strong enough to hold the weight of the machine (see the serial number plate for machine weight).

ONLY properly trained and qualified operators shall load and unload this machine.

Free-wheel configuration for Winching or Towing.

RUNAWAY HAZARD!

DANGER

After releasing the brakes there is nothing to stop machine travel. Machine will roll freely on slopes.

ALWAYS chock the wheels before manually releasing the brakes.

The machine can be winched or towed short distances at speeds not to exceed 5 MPH (8 km/h).

Before towing or winching the machine, it is necessary to release the brakes. Reset the brakes after towing or winching.

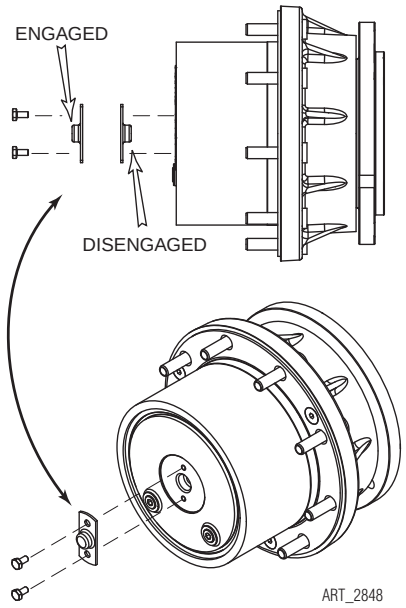

Disengage Brakes before Towing or Winching

- Chock the wheels.
- Remove the Torque Engage Cap and reinstall with the bump facing inward on all four (4) hubs.

Engage Brakes before Driving

- Remove the Torque Engage Cap and reinstall with the bump facing outward on all four (4) hubs.

Driving or Winching onto or off of a Transport Vehicle

Before loading the machine, orient the turntable so that the platform is over the non-steering wheels so that the Rotation Lock may be engaged later in the loading process.

WARNING

ONLY properly trained and qualified operators shall load and unload this machine.

Read and understand all safety, control, and operating information found on the machine and in this manual before operating the machine.

Whether winching or driving the machine on to a truck or trailer, always check the area for dangerous situations before moving the machine.

If driving the machine, always use a second person acting as a spotter to make sure the person loading the machine avoids dangerous situations.

Driving

- Turn the Base Key Switch to PLATFORM. Check that the Emergency Stop Switch is reset by turning it clockwise.
- Enter the platform and reset the Platform Emergency Stop Switch.
- Test platform control functions.
- Raise the jib slightly for platform ground clearance.
- Carefully drive the machine off or on to the transport vehicle.
- Make sure you can see the second person giving guidance.

Note: The brakes are automatically released for driving and will automatically apply when the control lever is returned to neutral which causes the machine to stop.

Winching

- Chock the wheels, then disengage brakes (see Disengage Brakes before Towing or Winching on page 48).
- Carefully operate the winch to lower the machine down the ramp or pull the machine up the ramp.
- Chock the wheels and engage the brakes before disengaging the winch.

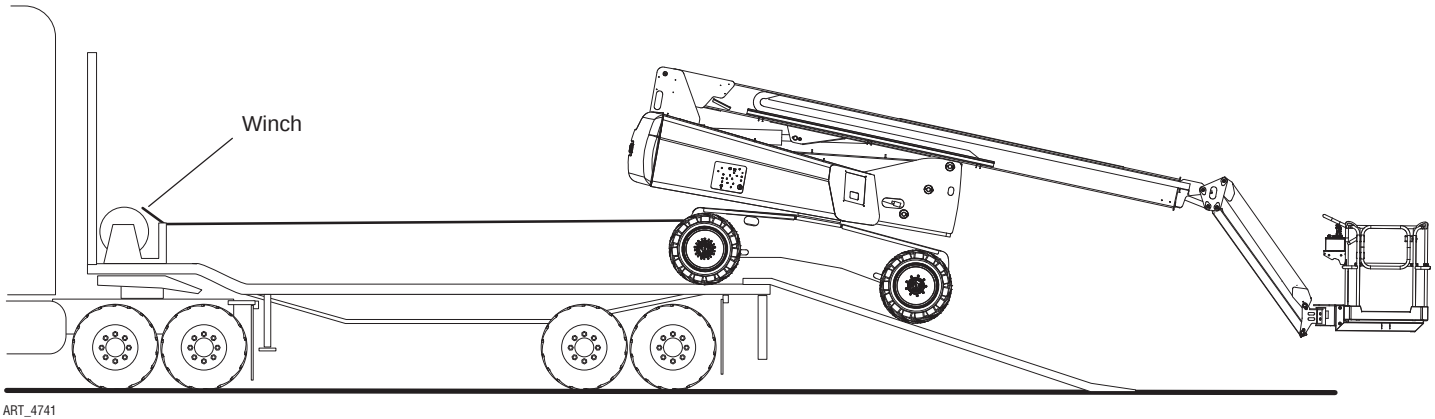

ART_4741

Securing to Truck or Trailer for Transport

- Turn the key Selector Key Switch to OFF and remove the key before transport.
- Turn the Battery Disconnect Switch to OFF before transport.
- Inspect the entire machine for loose or unsecured items.
- Secure the chassis.
- Secure the platform.

Securing the Chassis

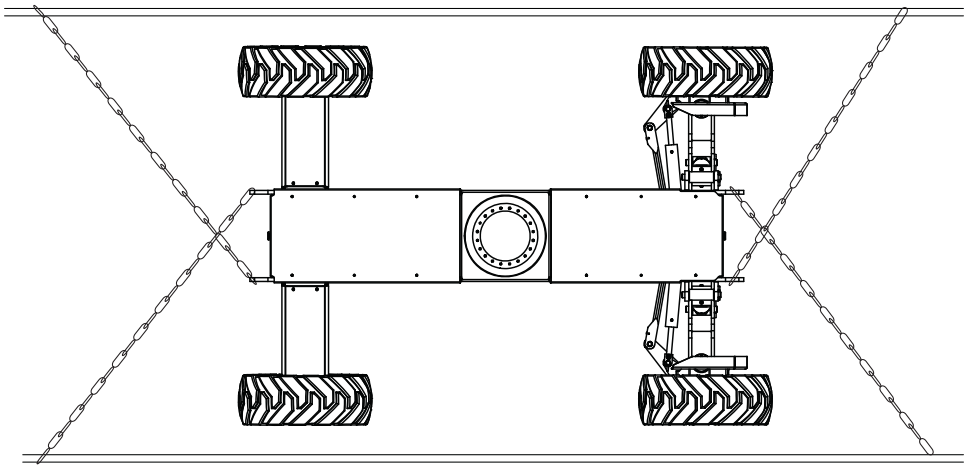

ART_4742

Make sure each of your chains is rated to hold the machine's weight (see serial number plate or Specifications). Use at least 4 chains.

Do not attach chain hooks directly to the machine. Loop the chain through the tie-down point and connect the chain hook to the chain.

Be sure chains are arranged so that they do not damage the machine.

Securing the Platform

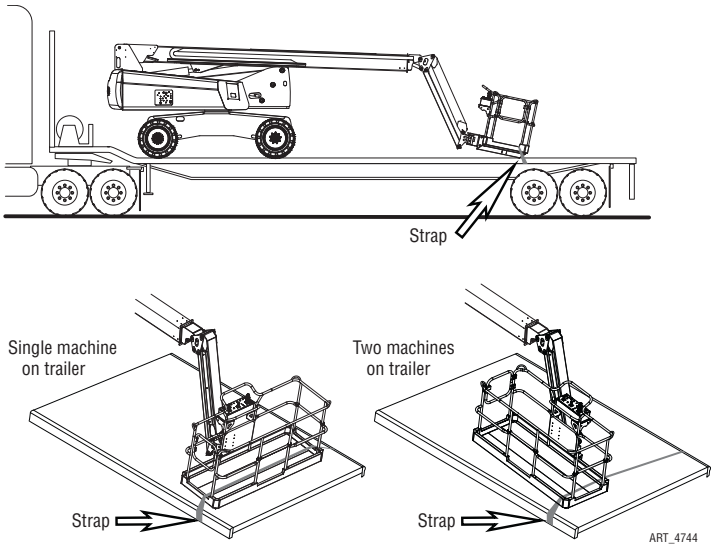

With the boom completely stowed, raise the jib slightly, then use the Platform Level function to lower the platform until the front of the platform touches the trailer surface.

Route the tie-down strap as shown through the width of the platform, over the toe boards of both side entry points. Tighten securely but do not over-tighten.

It may be necessary to turn the platform 90 degrees when loading two machines on the same trailer. In this case, route the strap over the toeboard and through the end of the platform as shown.

Loading Three Machines

Three machines may be loaded onto a single 53 ft trailer by rotating the turntable of each machine and rotating the platforms as shown below.

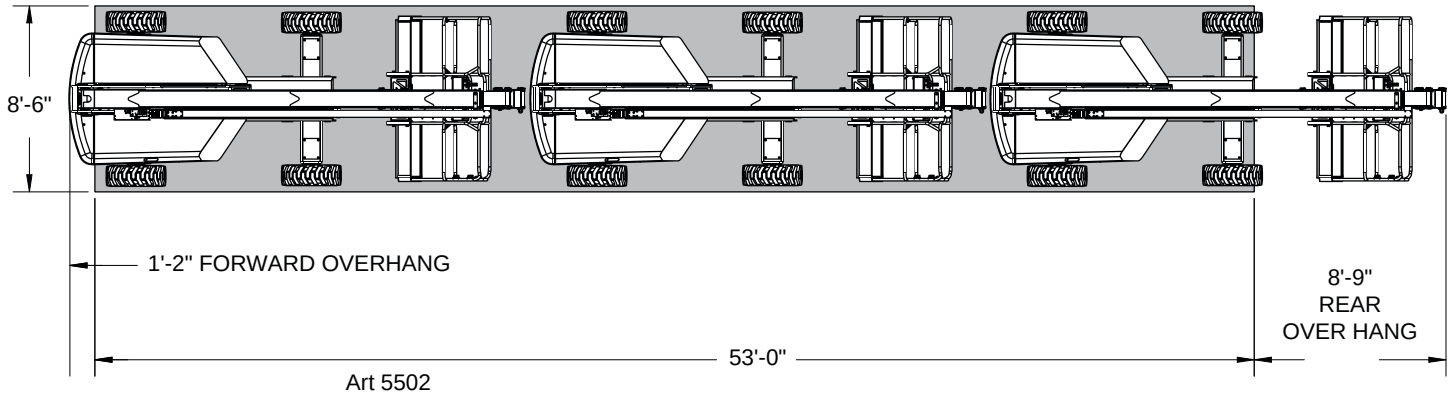

- The boom of each machine should be full retracted.
- Arrange the machines as shown.
- Secure the chassis of each machine as previously instructed on page 50.
- Secure the platform of each machine as previously instructed on page 50.

Boom Lifting Instructions

Only qualified riggers should rig and lift this machine.

DANGER

Ensure that the crane capacity, loading surfaces, chains, straps and slings are sufficient to withstand a machine weight of 19,000 lbs (8,619 kg). The lifting straps should be a minimum of 20 feet in length on each side. Use steel bars with a minimum yield strength of 50,000 psi.

Ensure that the platform is unloaded and that all material and tools have been removed.

MACHINE POSTION PRIOR TO LIFT



Art_5512a

1. Rotate the turntable so that it is parallel to the chassis center line. The counterweight should be directly over the front axle (steerable wheels).

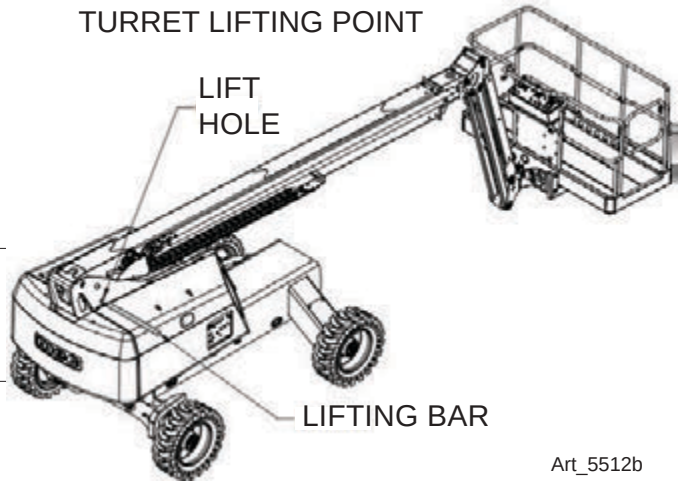

Art_5512b

2. Place a 2-inch (5 cm) diameter pin at least 30 inches (80 cm) long through the hole at the counter-weight end of the turntable.

CAUTION

Be careful to avoid / pinch any hydraulic lines.

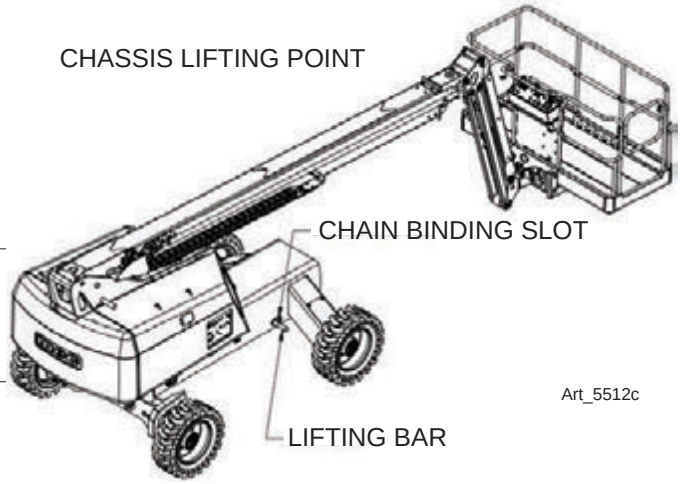

Art_5512c

3. Place a 1.75-inch (4.5 cm) diameter pin at least 40 inches (100 cm) long through the chain binding slot at the fixed axle end of the chassis.

CAUTION

Be careful to avoid / pinch any hydraulic lines.

4. Attach straps to each end of the pin and secure appropriately. Place padding between the straps and the machine to protect the machine finish. Use shackles and clevis pins as necessary.

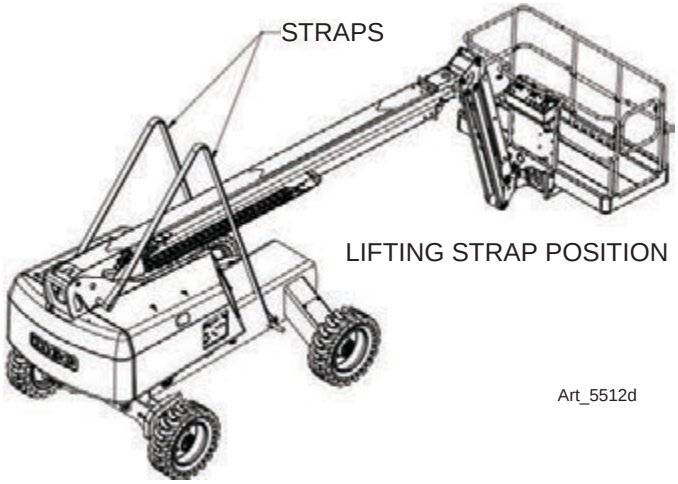

5. Locate the machine's center of gravity and rig as shown below. Center of Gravity measurements are taken from the center of the non-steering wheel.

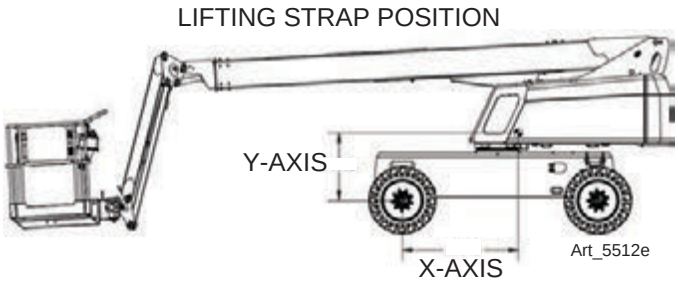

Center of Gravity	X-Axis		Y-Axis	
45-J	57 in *	1,448 mm *	33 in *	838 mm *
* Distance from center of non-steering wheel				

6. Carefully lift the machine and move to its desired place.
7. When the machine is in place remove the straps and lifting bars.

Procedure is finished.

Notes

MEC Parts Order Form

Phone: 559-842-1523
Fax: 559-400-6723
Email: Parts@mecawp.com

Please fill out completely

Date: _____

Account: _____

Bill to: _____

_____

_____

_____

Ordered By: _____

Your Fax No.: _____

Ship to: _____

_____

_____

_____

Purchase Order Number _____
** All orders MUST have a Purchase Order Number

Ship VIA _____
**Fed Ex shipments require Fed Ex account number

Part Number	Description	Quantity	Price

All back-ordered parts will be shipped when available via the same ship method as original order unless noted below:

___ Ship complete order only - No Backorders
___ Ship all available parts and contact customer on disposition of back-ordered parts
___ Other (Please specify)

_____

Limited Owner Warranty

MEC Aerial Platform Sales Corp. warrants its equipment to the original purchaser against defects in material and/or workmanship under normal use and service for one (1) year from date of registered sale or date the unit left the factory if not registered. MEC Aerial Platform Sales Corp. further warrants the structural weldments of the main frame and scissor arms to be free from defects in material or workmanship for five (5) years from date of registered sale or date unit left the factory if not registered. Excluded from such warranty is the battery(s) which carries a ninety (90) day warranty from described purchase date. Warranty claims within such warranty period shall be limited to repair or replacement, MEC Aerial Platform Sales Corp's option, of the defective part in question and labor to perform the necessary repair or replacement based on MEC Aerial Platform Sales Corp's then current flat rate, provided the defective part in question is shipped prepaid to MEC Aerial Platform Sales Corp. and is found upon inspection by MEC Aerial Platform Sales Corp. to be defective in material and/or workmanship. MEC Aerial Platform Sales Corp. shall not be liable for any consequential, incidental or contingent damages whatsoever. Use of other than factory authorized parts; misuse, improper maintenance, or modification of the equipment voids this warranty. The foregoing warranty is exclusive and in lieu of all other warranties, express or implied. All such other warranties, including implied warranties of merchantability and of fitness for a particular purpose, are hereby excluded. No Dealer, Sales Representative, or other person purporting to act on behalf of MEC Aerial Platform Sales Corp. is authorized to alter the terms of this warranty, or in any manner assume on behalf of MEC Aerial Platform Sales Corp. any liability or obligation which exceeds MEC Aerial Platform Sales Corp's obligations under this warranty.



MEC Aerial Work Platforms

1401 S. Madera Avenue, Kerman, CA 93630 USA
Toll Free: 1 - 877 - 632 - 5438
Phone: 1 - 559 - 842 - 1500
Fax: 1 - 559 - 842 - 1520
info@MECawp.com
www.MECawp.com