Assembly Instructions.

Model：K1119

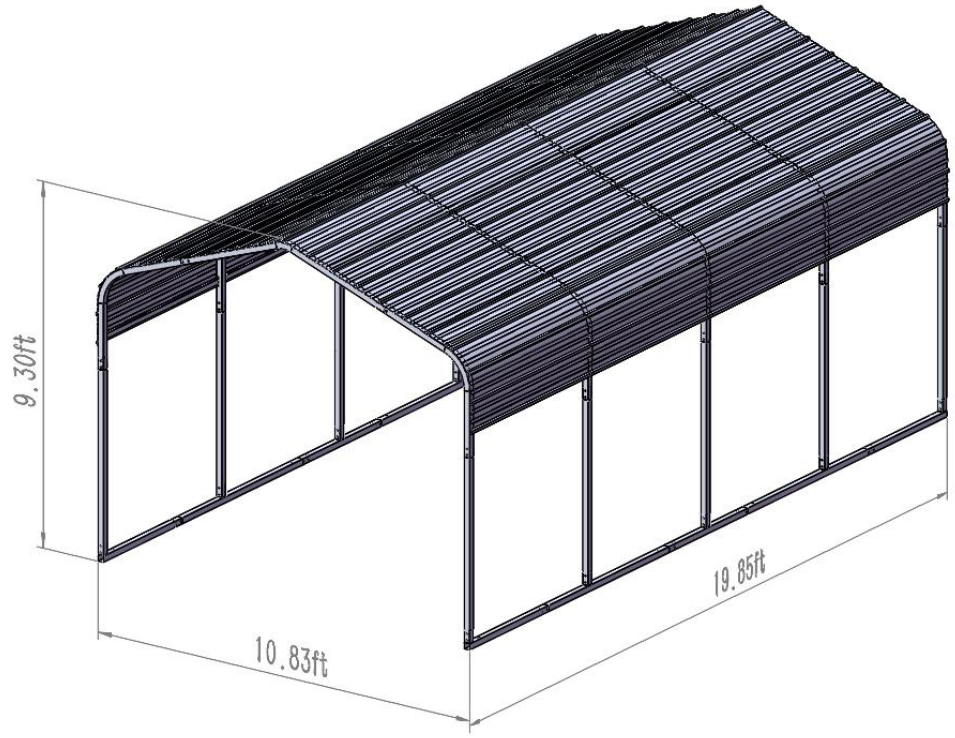

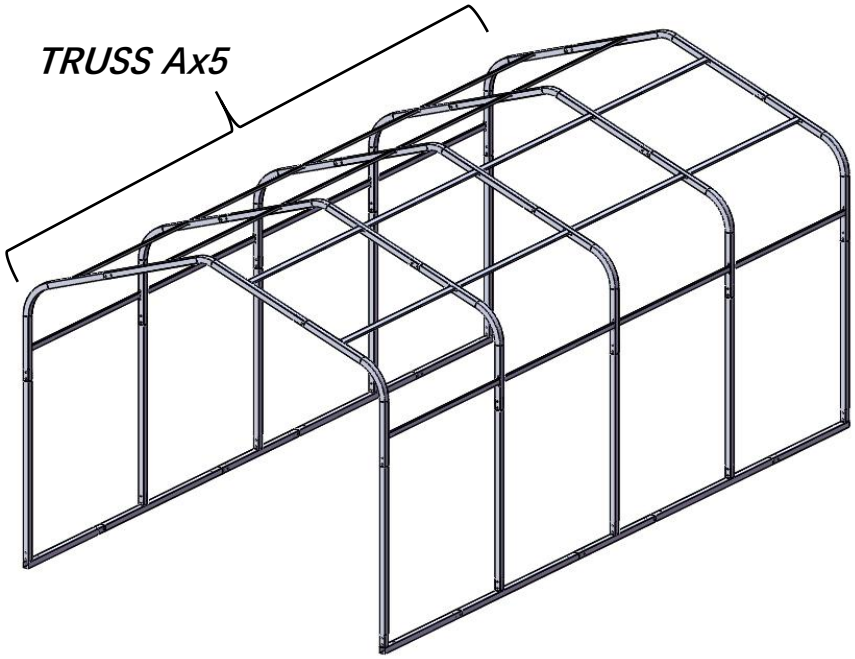

BEFORE YOU START:

·Before beginning construction, check local building codes regarding footings, location and other requirements. Study and understand this owner's manual. Important information and helpful tips will make your construction easier and more enjoyable.

· Instructions are supplied in this manual and contain all appropriate information for your build-ing model. Review all instructions before you begin, and during assembly, follow the step sequence carefully for successful results.

Identify all parts and check quantities against parts list.

· Be sure the day you select to install your building is dry and calm. Do not attempt to assemble your building on a windy day. Be careful on wet or muddy ground.

· Whenever possible, two or more people should work together to assemble your building. One person can position parts or panels while the other is able to handle the fasteners and the tools.

SAFETY FIRST!

Safety precautions are important to follow throughout the construction of your building

· Care must betaken when handling various pieces of your building since some contain sharp edges. Please wear work gloves, eye protection and long sleeves when assembling or performing any maintenance on your building.

· Never concentrate your total weight on the roof of the building. When using a step ladder make sure that it is fully open and on even ground before climbing on it.

· Practice caution with the tools being used in the assembly of this building.Be familiar with the operation of all power tools.

· Do not attempt to assemble the building if parts are missing because any building left partially assembled may be seriously damaged by light winds.

· Do not attempt to assemble the building on a windy day, because the large panels acting as a "sail" can be whipped about by the wind;making construction difficult and unsafe.

WARRANTY REQUIREMENTS:

· Wash all surfaces annually using a hose and soft nylon brush.

· Within 2 km of coast -wash every 3 months as above. After a storm, wash the cladding and the gutters as soon as possible to remove any highly corrosive salt deposits.

· Volcanic Ash Fallout -wash as soon as possible, removing fall out from roof and gutters.

· Do not allow manures, chemicals or other corrosive materials to have direct contact with clad-ding.

Item no.	Reference Image	Qty.	Item no.	Reference Image	Qty.
01	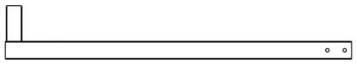 2*2*39.4″	4	07	 0.8*1.6*57.1″	24
02	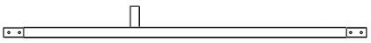 2*2*67.5″	4	08	 61″	20
03	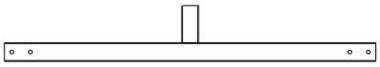 2*2*39.4″	2	09	 M5.5*0.8″	160
04	2*2*47.4″	10	10	Fixed pile  M10*5.9″	8
05	 2*2*40.6″ (Installation pipes for eaves)	10	11	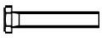 M8*2.6″ (Hex bolt and nuts)	76
06	 2*2*72.5″(Roof pipe)	5	12	 M4.2*0.8″	96

The dimensions provided in the list are for reference only, and there may be some errors in reality. They are only used as a reference for distinguishing parts during installation.

STEP 1

Base positioning and installation

Item no.	Reference Image	Qty.
01	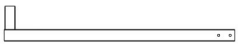 2*2*39.4"	4
02	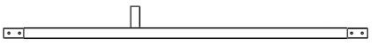 2*2*67.5"	4
03	 2*2*39.4"	2
11	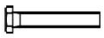 M8*2.6"	16

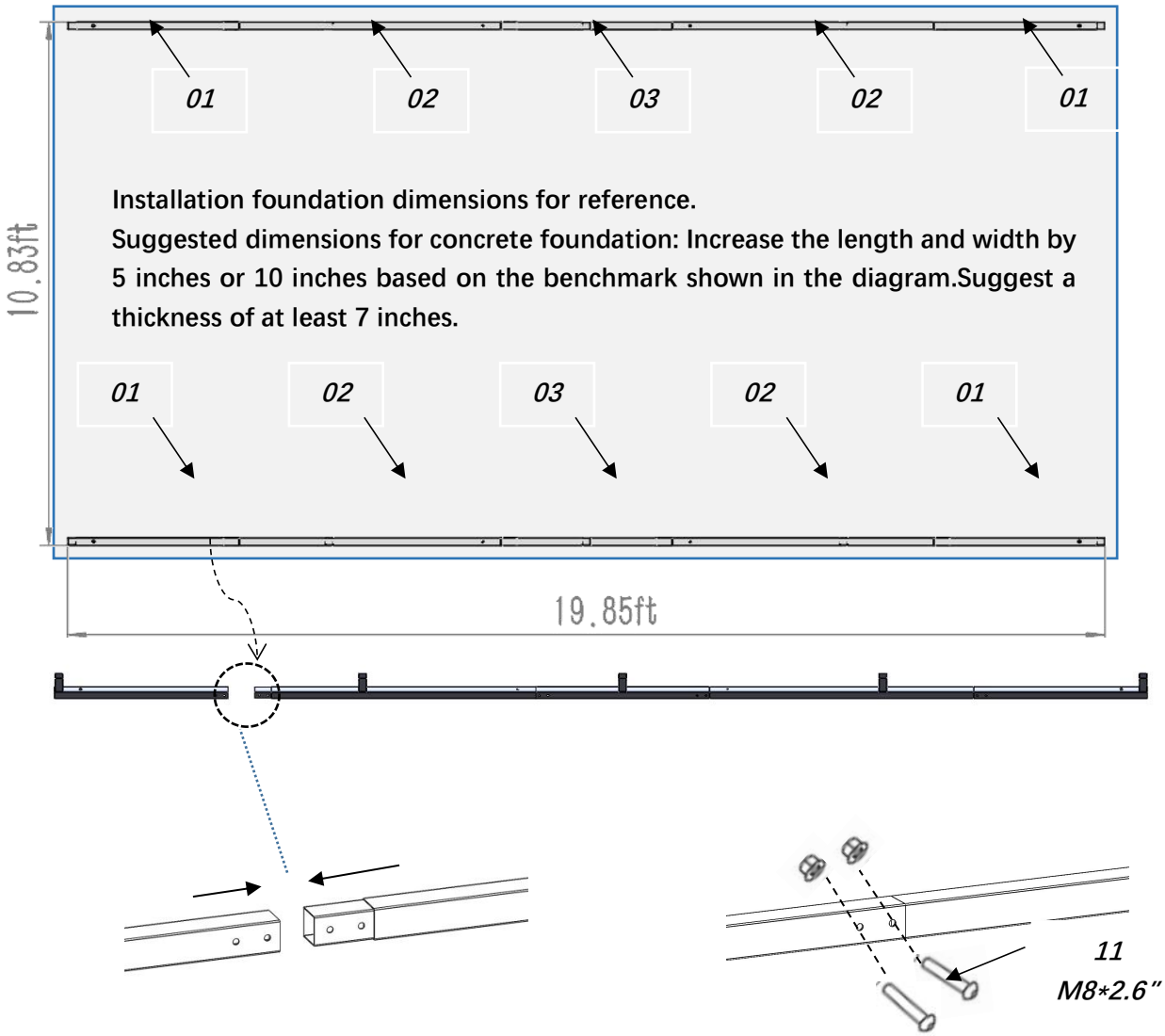

Install the base in order according to the numbers in the diagram.If you encounter difficulty inserting the connecting tube, please use a file to remove the burrs on the head of the square tube. When the bottom foundation is completed, the main truss will be installed next.

Install all the trusses

Item no.	Reference Image	Qty.
05	 2*2*40.6″	10
06	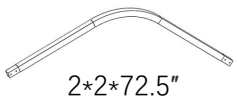 2*2*72.5″	5
11	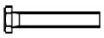 M8*2.6″	20

TRUSS A x 5

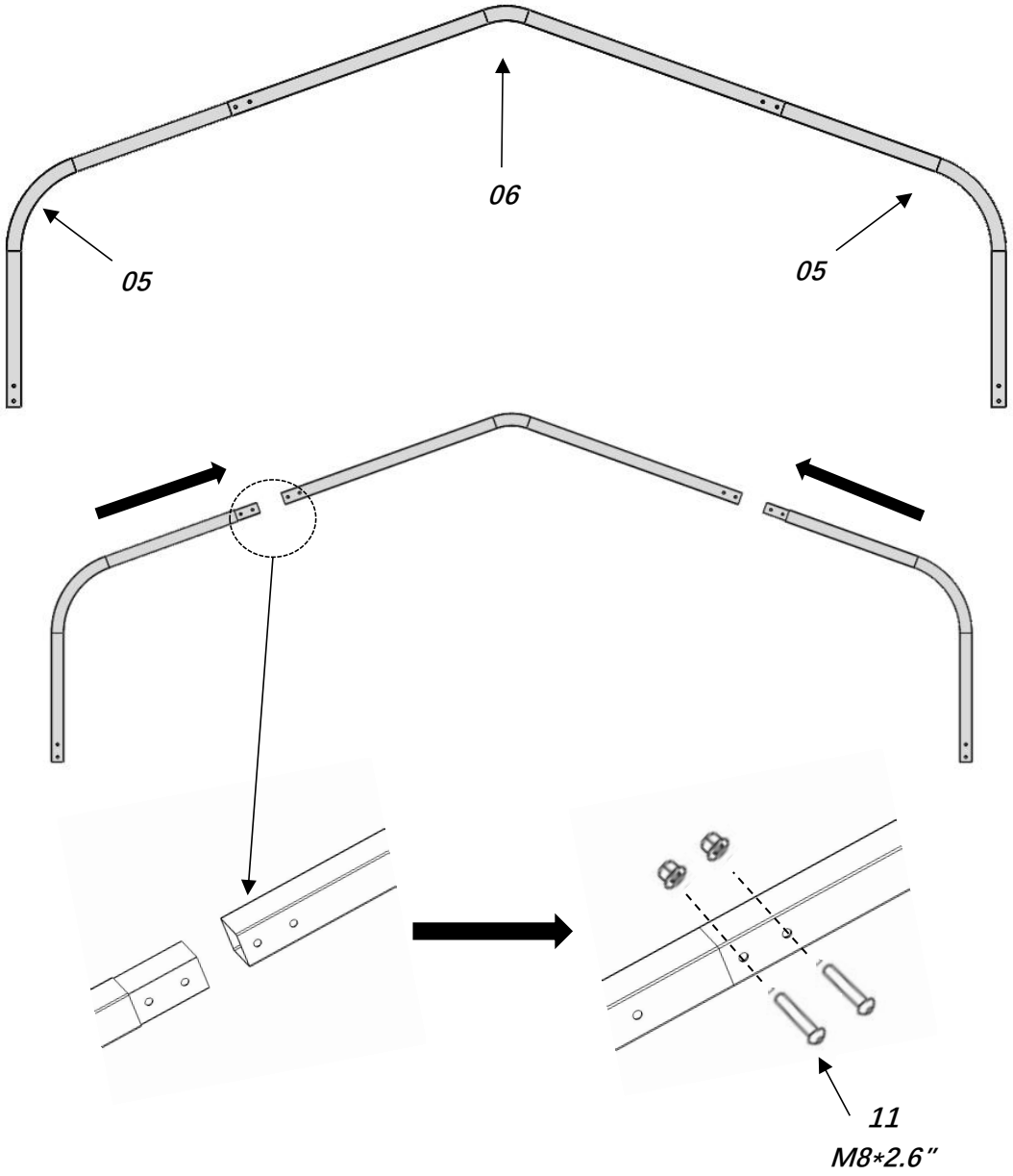

Fix the boom to the truss using a fixed plate.

Item no.	Reference Image	Qty.
04	2*2*47.4″	10
11	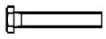 M8*2.6″	20

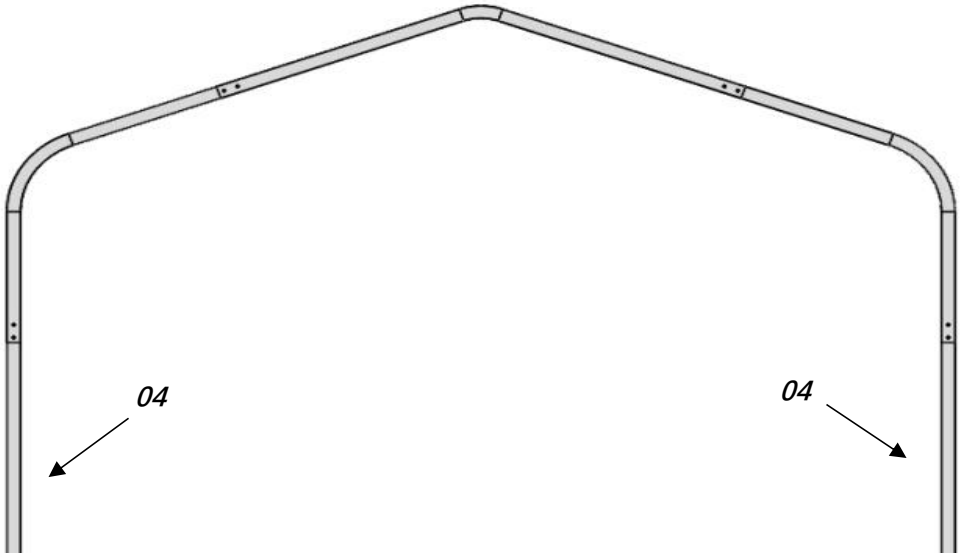

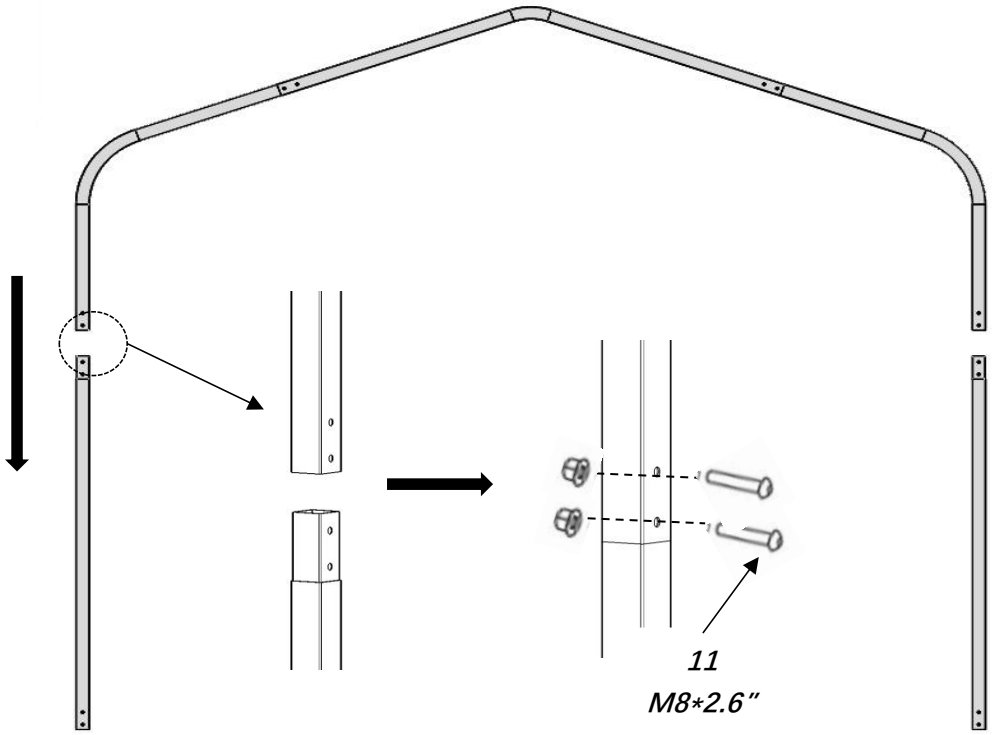

Raise up all the trusses

Item no.	Reference Image	Qty.
10	 M10*5.9"	8
11	 M8*2.6"	28

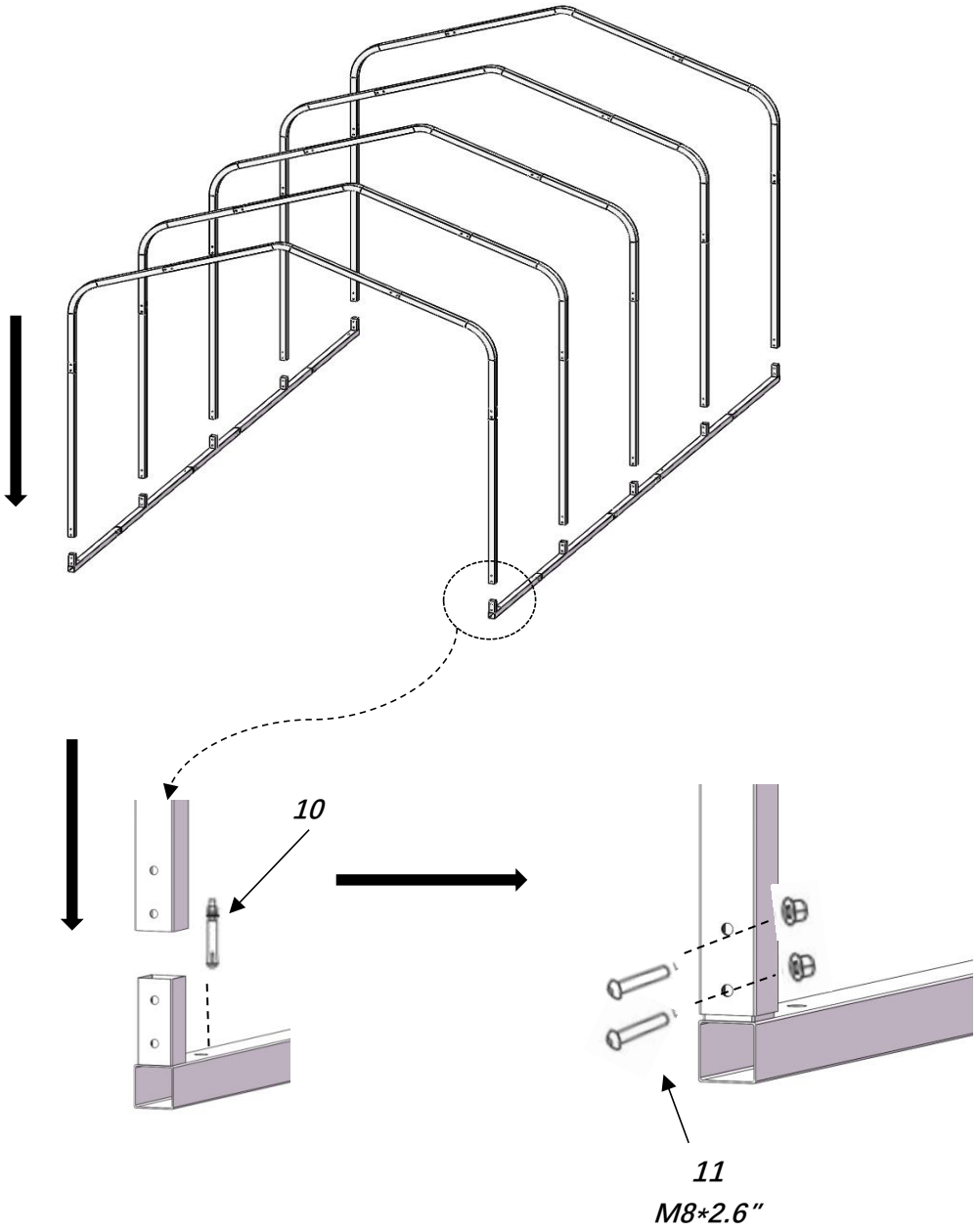

Gradually install each assembled truss onto the base and secure it with screws,

Install the truss on the base and fix it with 11.

Install the side support pipe

Item no.	Reference Image	Qty.
07	0.8*1.6*57.1"	24
12	M4*0.8"	96

This spacing is the recommended spacing for the side crossbars. It can be adjusted according to the actual installation conditions.

By adjusting the position of the support tube, ensure that there is a support tube at the junction of the subsequent installation of the metal corrugated board for installing fixing screws.

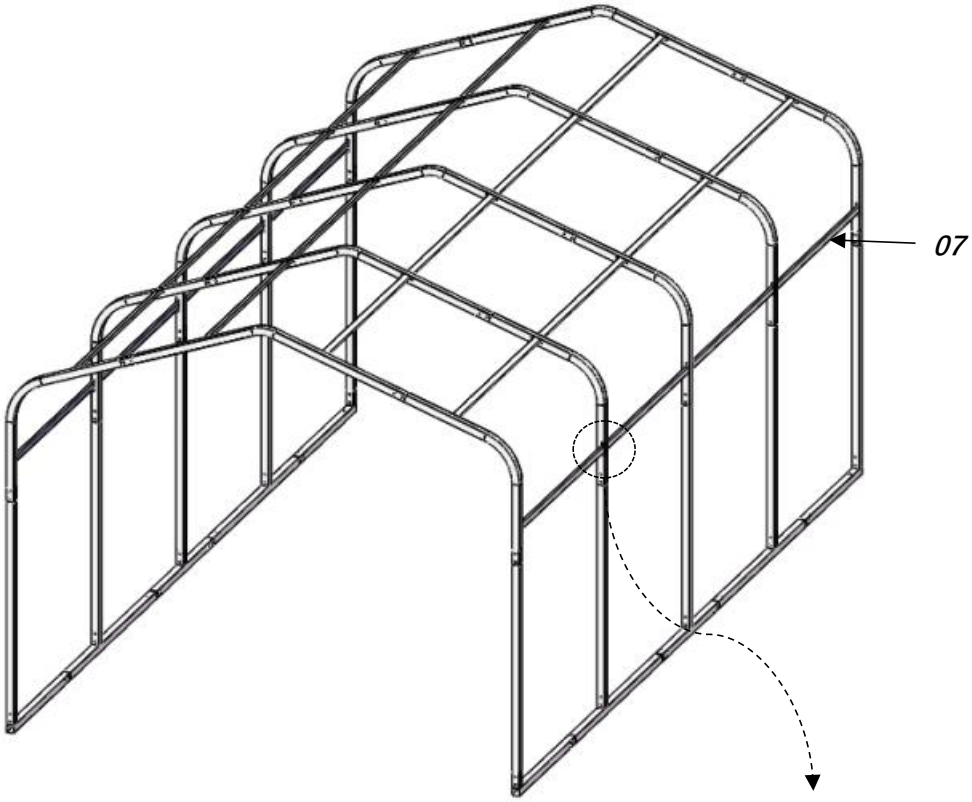

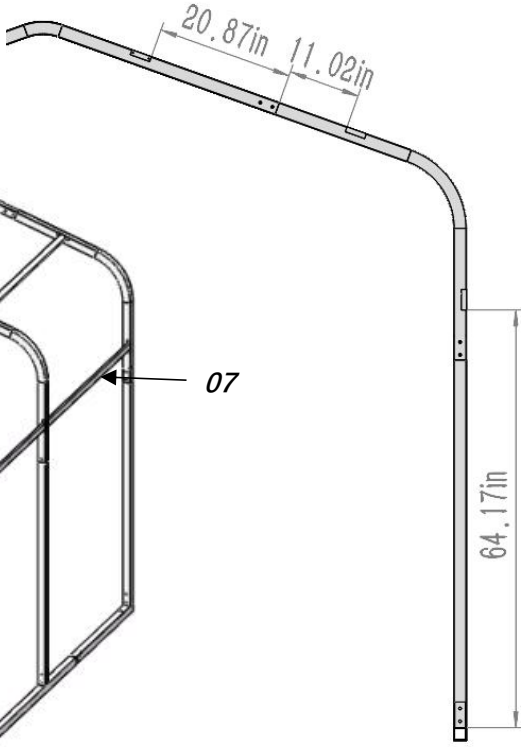

After the overall framework installation is completed, measure the diagonal of the house with a tape measure and make appropriate adjustments. Check the fastening screws of the connection points to ensure they are tightened.

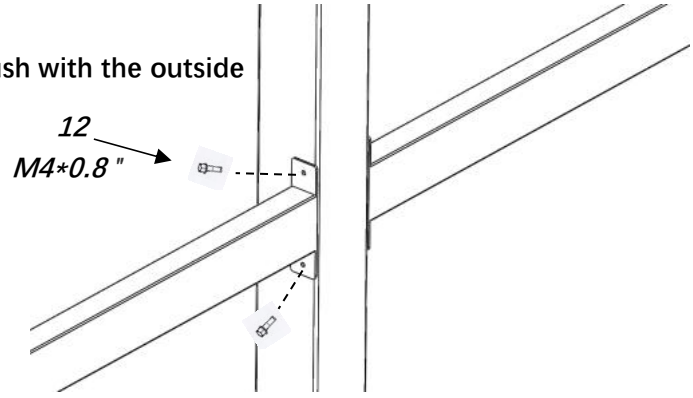

Install corrugated metal roofing

Item no.	Reference Image	Qty.
08	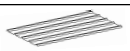 61″	8
09	 M5.5*0.8″	64

When two panels overlap,make sureupper panel covers the lower panel.
Suggestion: It is recommended to install fixed screws with a spacing of no more than 9.8″ in the vertical direction.

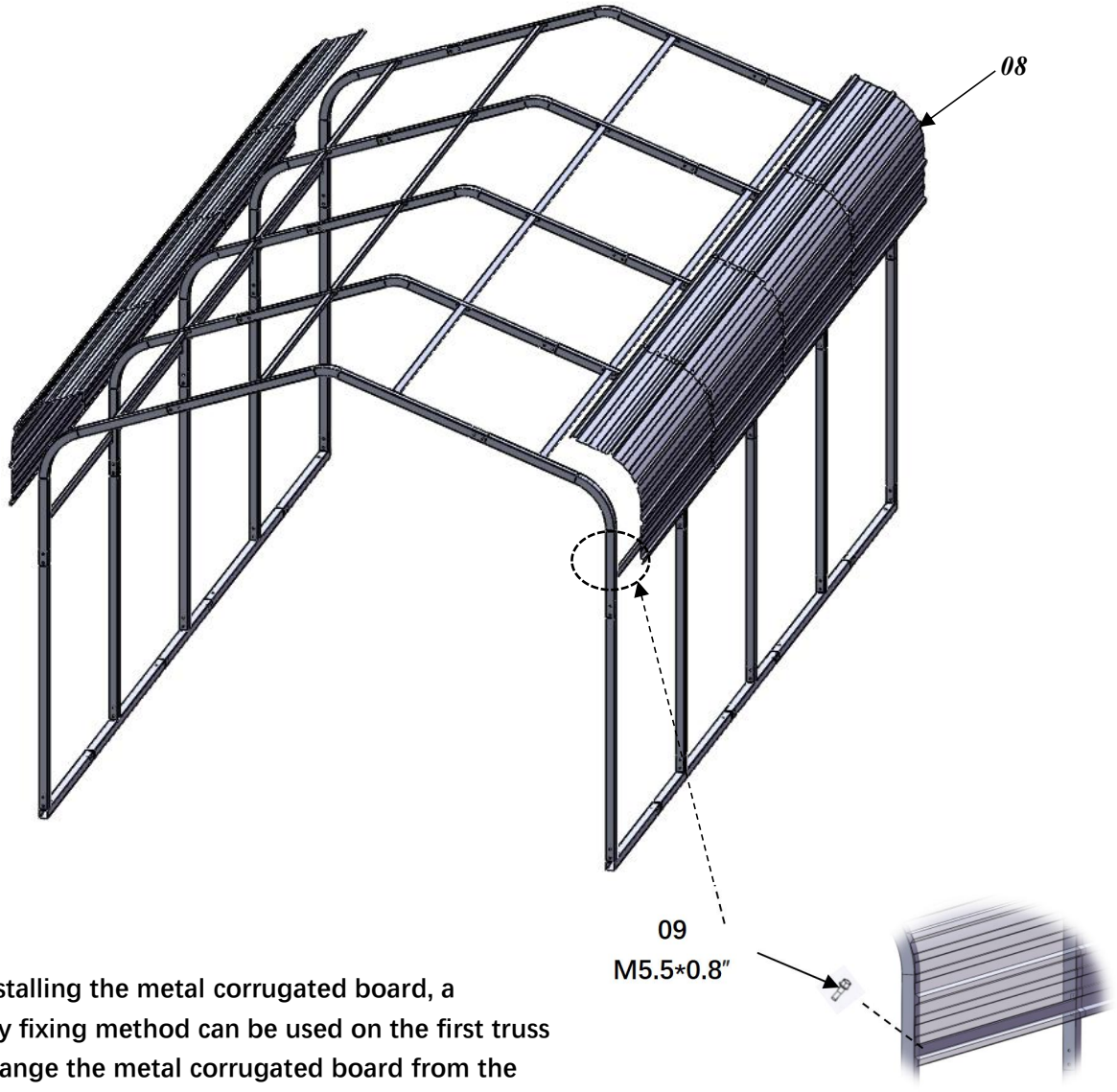

Before installing the metal corrugated board, a temporary fixing method can be used on the first truss to pre arrange the metal corrugated board from the bottom to the roof, in order to confirm whether the up and down distance for installing the corrugated board is appropriate, so as to ensure that all metal corrugated boards can be installed perfectly in the end.

Install corrugated metal roofing

Item no.	Reference Image	Qty.
08	 61″	12
09	 M5.5*0.8″	96

When two panels overlap,make sureupper panel covers the lower panel.
Suggestion: It is recommended to install fixed screws with a spacing of no more than 250mm in the vertical direction.

