SHELTER INSTALLATION MANUAL

MODEL:AP5010026T

W15.24*L30.48*H7.9M

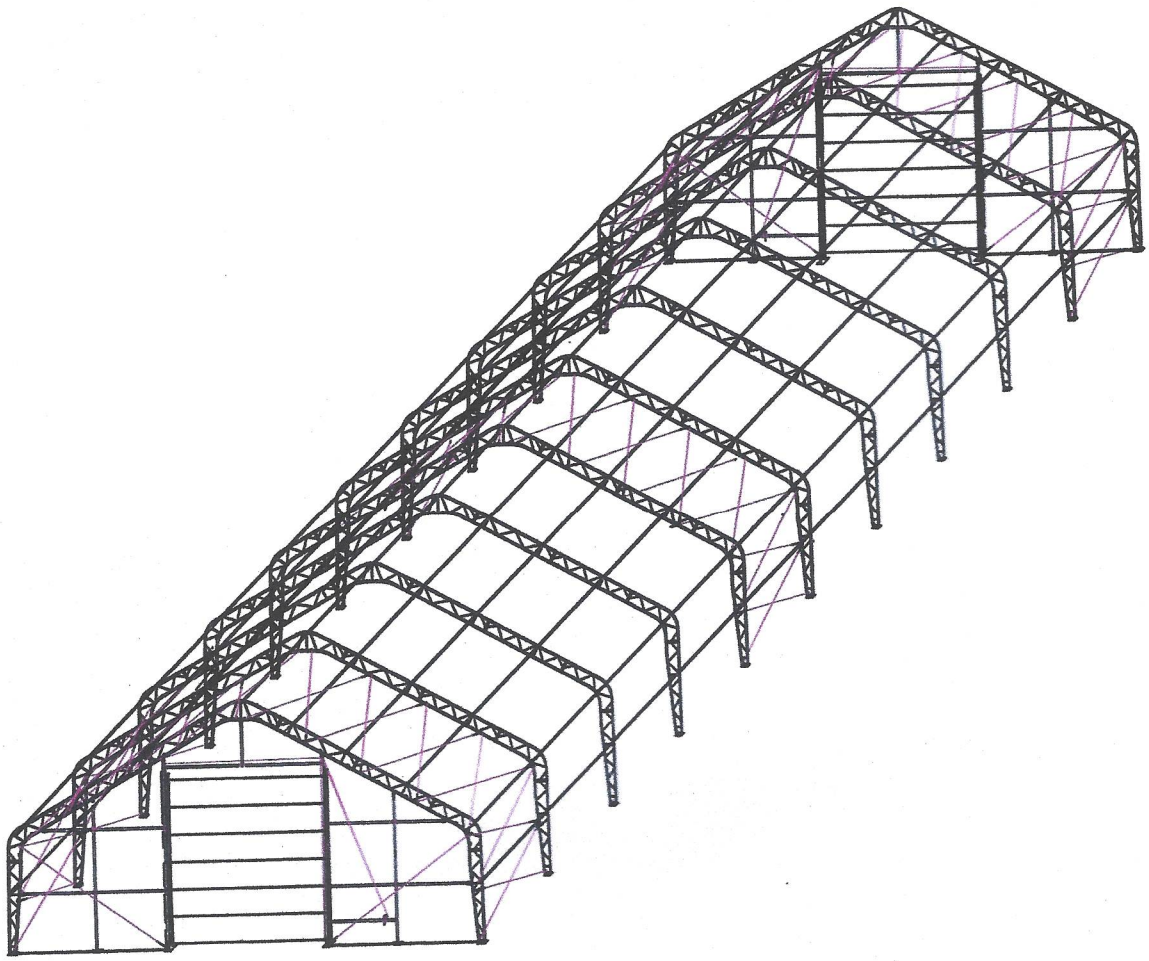

Part Code	Description	Quantity
1	Top roof truss	5
1A	Top roof truss for front and back panel	2
1B	Top roof truss for steelwire installation	4
2	Upper roof truss	10
2A	Upper roof truss for front and back panel	4
2B	Upper roof truss for steelwire installation	8
3	Lower roof truss	10
3A	Lower roof truss for front and back panel	4
3B	Lower roof truss for steelwire installation	8
4	Shoulder truss	10
4A	Shoulder truss for front and back panel	4
4B	Shoulder truss	8
5	Sidewall truss	10
5A	Sidewall truss for front and back panel	4
5B	Sidewall truss for steelwire installation	8
6L	Base plate for left corner	2
6R	Base plate for right corner	2
7	Base plate for sidewall	18
8L/8R	Base plate for door	2+2
8A	Base plate for front and back panel	4
10R	Upper door right frame	2
10L	Upper door left frame	2
10AR	Upper door right frame	2
10AL	Upper door left frame	2
11	Upper vertical tube for front and back panel	4
11A	Lower vertical tube for front and back panel	4
12	Upper rail for sides of front and back panel	4
13	Lower rail for sides of front and back panel	4
14	Door beam	2+2
14A	Hanging tube for door beam	2
15	Rail beside door	8
16	Rail for hand winch	2
17	Tensioning tube for roof cover	20+2
18	Tensioning tube for front and back panel	4+4

19	Door tube	12+12
19A	Bottom door tube	2+2
31	Horizontal tube	110
35	PE tube	18+2
39	Plastic cap for tensioning tube	12+4
40	Hexagon bolt M10*30	20
42	Hexagon bolt M10*60	130
45	Hexagon bolt M10*75	54
47	Hexagon bolt M10*85	80
53	Hexagon bolt M14*30	450
59	Wrench	2
60	Turn buckle kit(M12)	76+152
68	Anchor bolts(M16*200)	112
70	Steelwire for roof(Φ8*3.8M)	60
70	Steelwire for sidewall(Φ8*3.8M)	12
73	Steelwire for front and back panel(Φ8*6M)	4
78	Hand winch and pulley	2
80	Roof cover	1
81	Cover for front and back panel	2
82	Cover for door	2
83	Rope for cover installation(Φ8*15M)	24
84	Band for ratchet(90CM)	22
85	Band for PVC tube(2.5M)	46
86	Anti-wear pad(10*20)	88
87	Zap straps	88

FIGURE 1

SKETCH OF MODEL 5010026T (W15.24*L30.48*H7.9M)

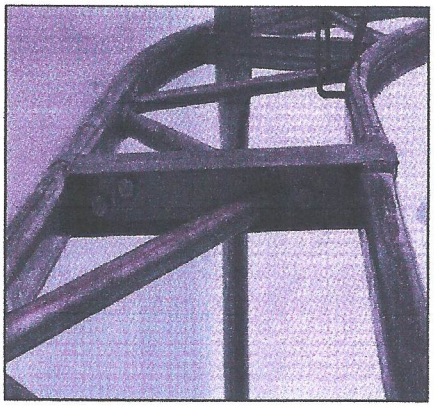

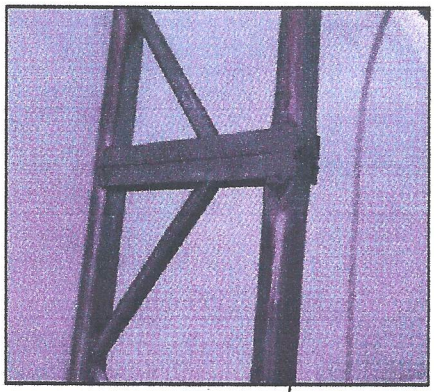

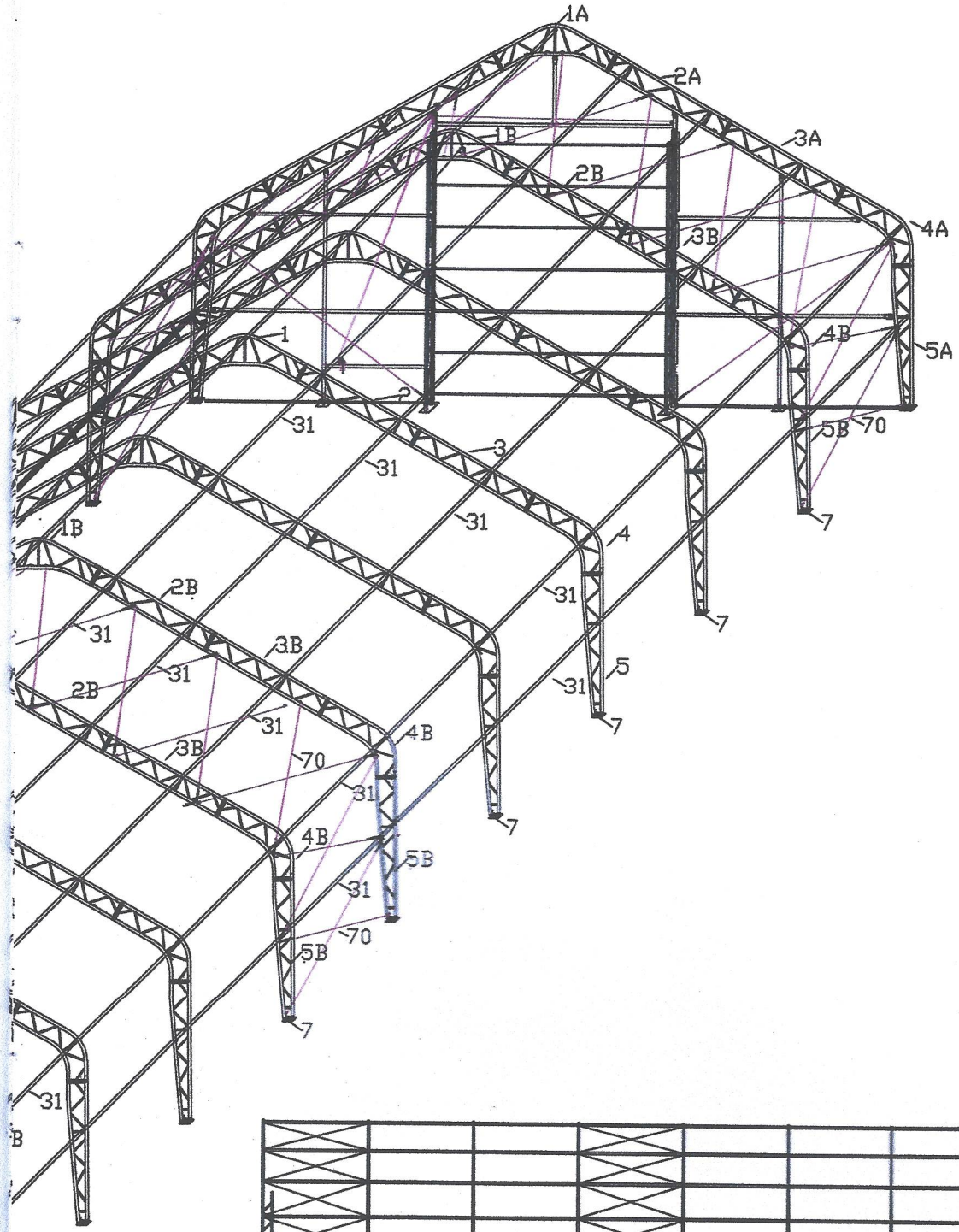
1A
2A
3A
4A
5A
1B
2B
3B
4B
5B
1
2
3
4
5
7
31
70

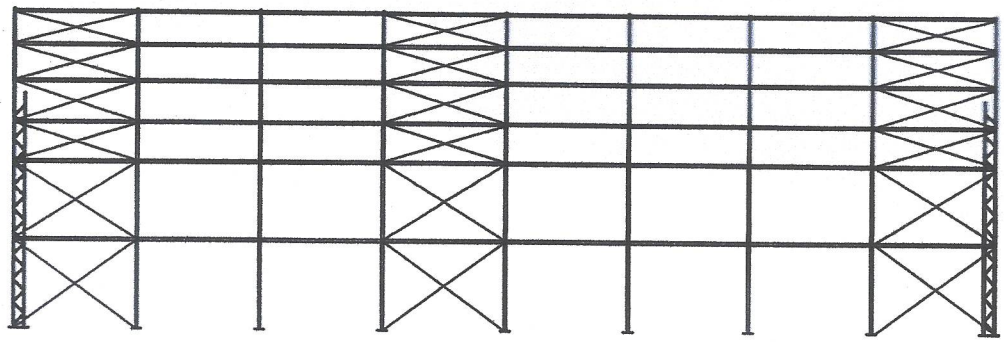

STEP 1 ARCH ASSEMBLY

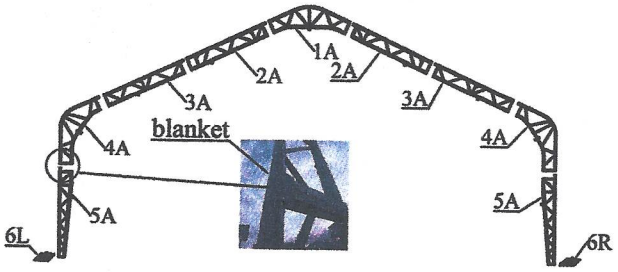

FIGURE 2 FRONT AND BACK PANEL ARCH

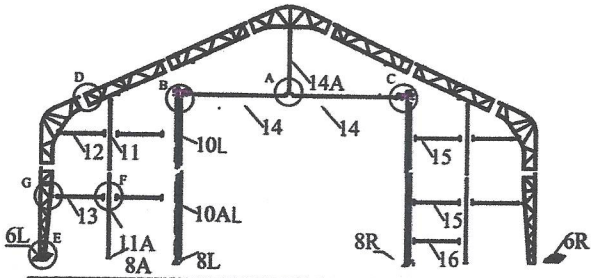

FIGURE 3 FRONT AND BACK PANEL ARCH

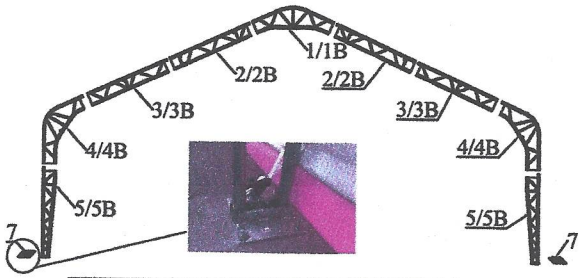

FIGURE 4 THE MIDDLE ARCH

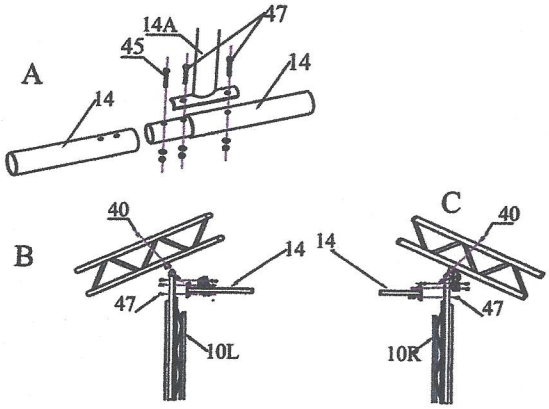

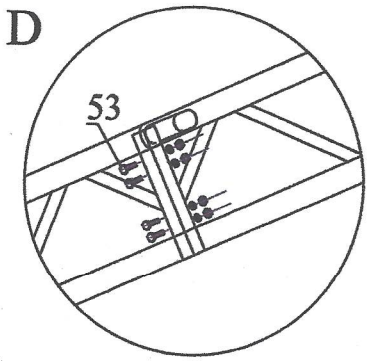

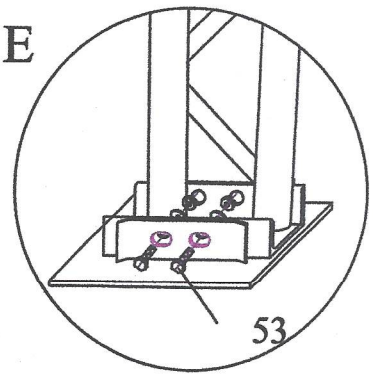

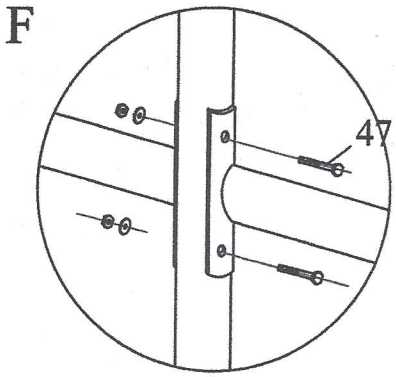

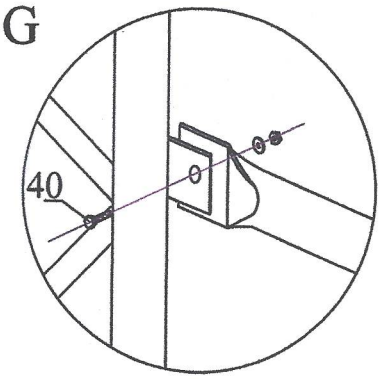

STEP2 ERECTING THE ARCHES

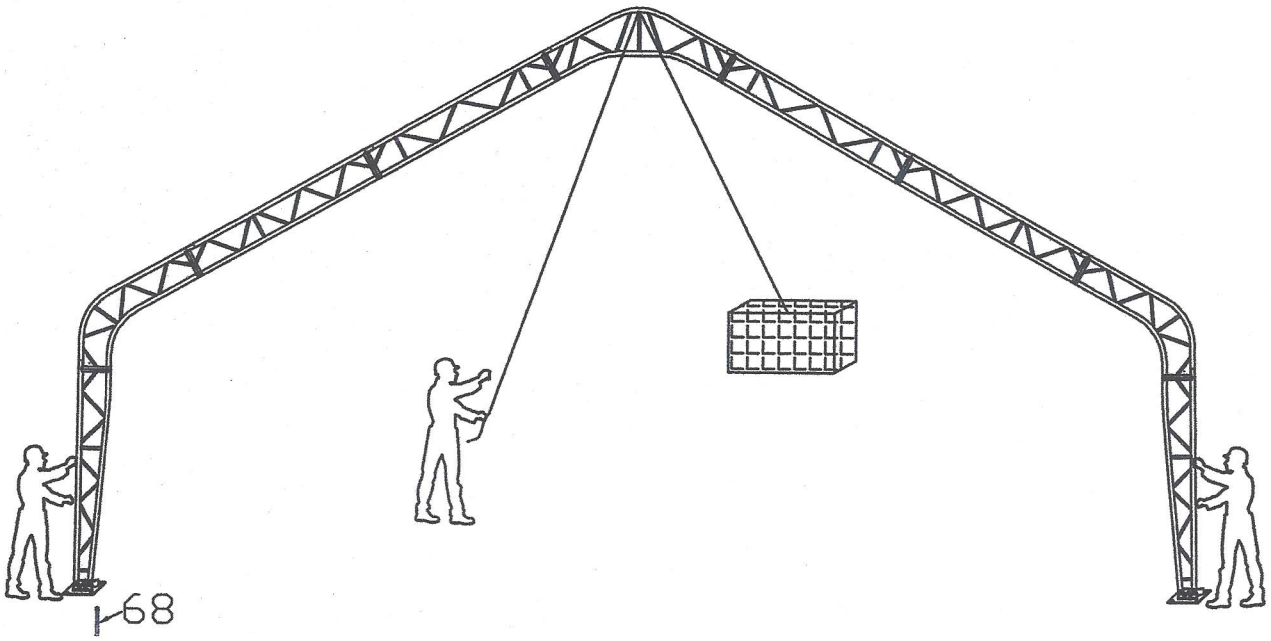

FIGURE 5 ERECTING AN ARCH

As shown in Figure 5

erect the front arch with ropes and tie and secure the rope on some heavy objects to temporarily secure the arch. Stake pegs (part # 68) should then be used to secure the base plates to the ground.

STEP3 ASSEMBLING THE ROOF PURLINS

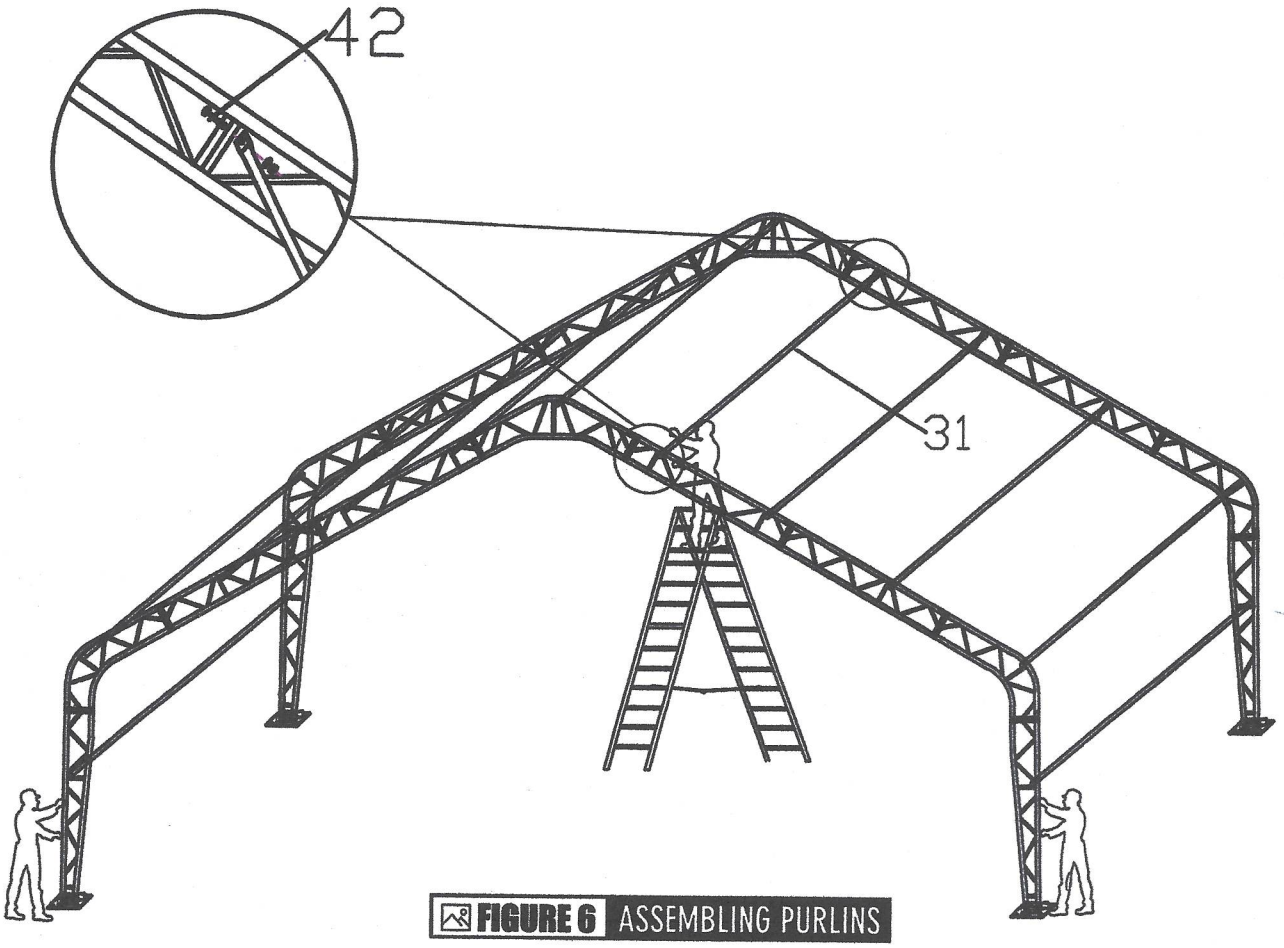

FIGURE 6 ASSEMBLING PURLINS

Immediately after erecting the front arch, erect the second arch similarly. Then, as shown in Figure 6, attach the two erected arches using roof purlin tubes. Use carriage bolts and nuts (part # 40A) to secure the roof purlin tubes.

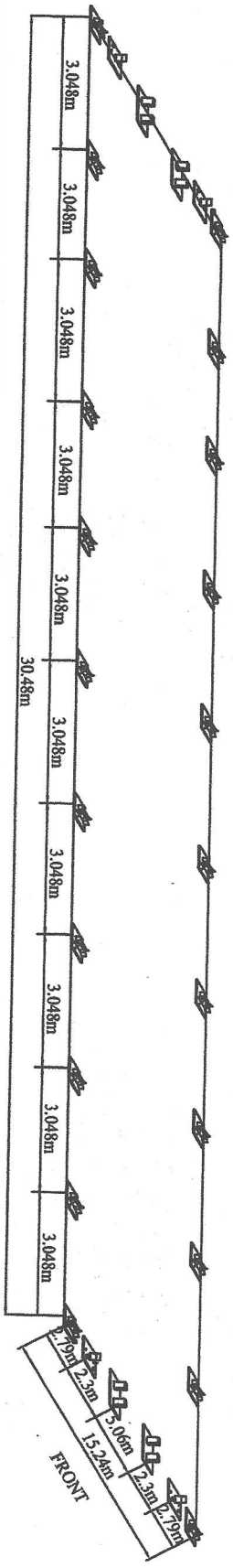
3.048m
3.048m
3.048m
3.048m
3.048m
3.048m
3.048m
3.048m
3.048m
3.048m
30.48m
2.79m
2.3m
5.06m
15.24m
2.3m
2.79m
FRONT

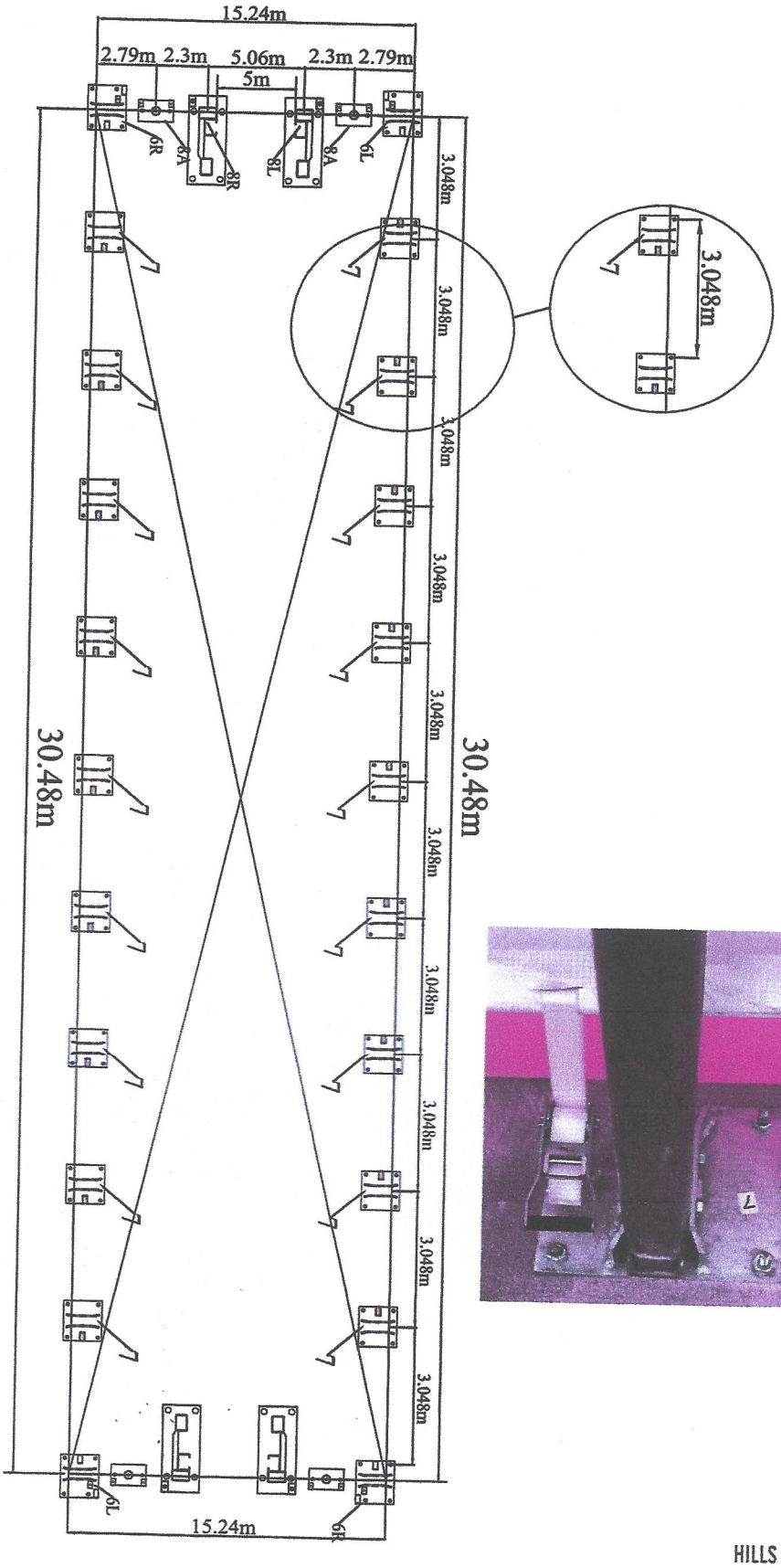
15.24m
2.79m
2.3m
5.06m
2.3m
2.79m
5m
6R
8A
8R
8L
8A
6L
3.048m
30.48m
30.48m
15.24m
6L
6R



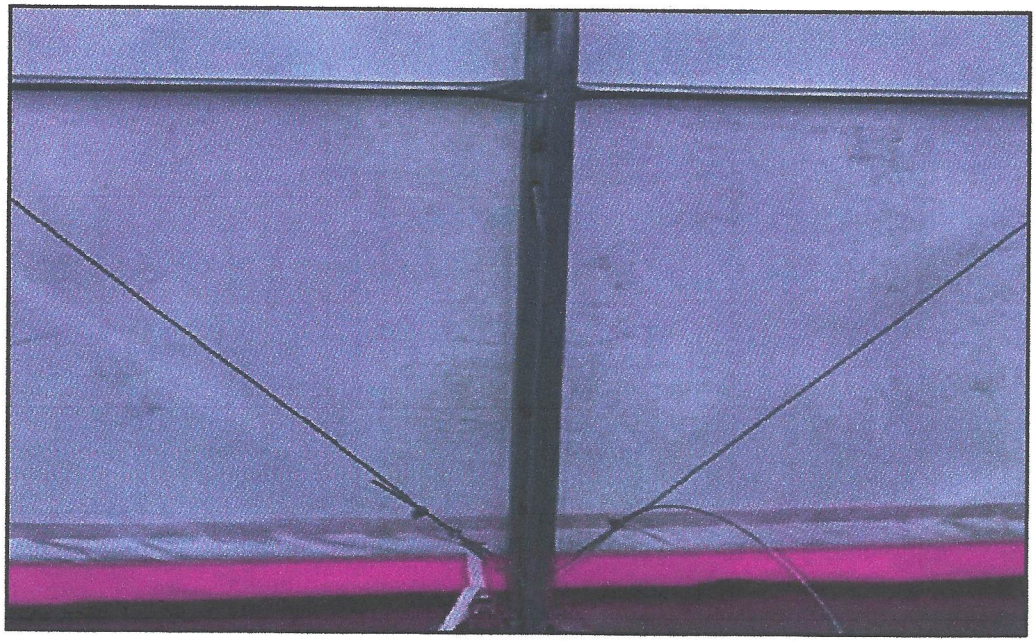

STEELWIRE INSTALLATION



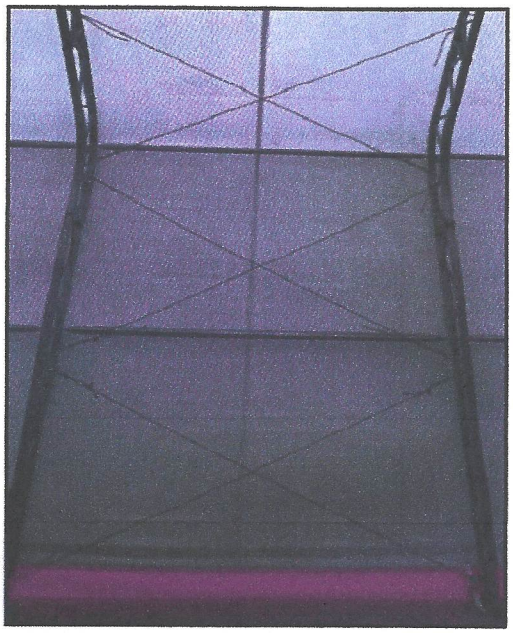

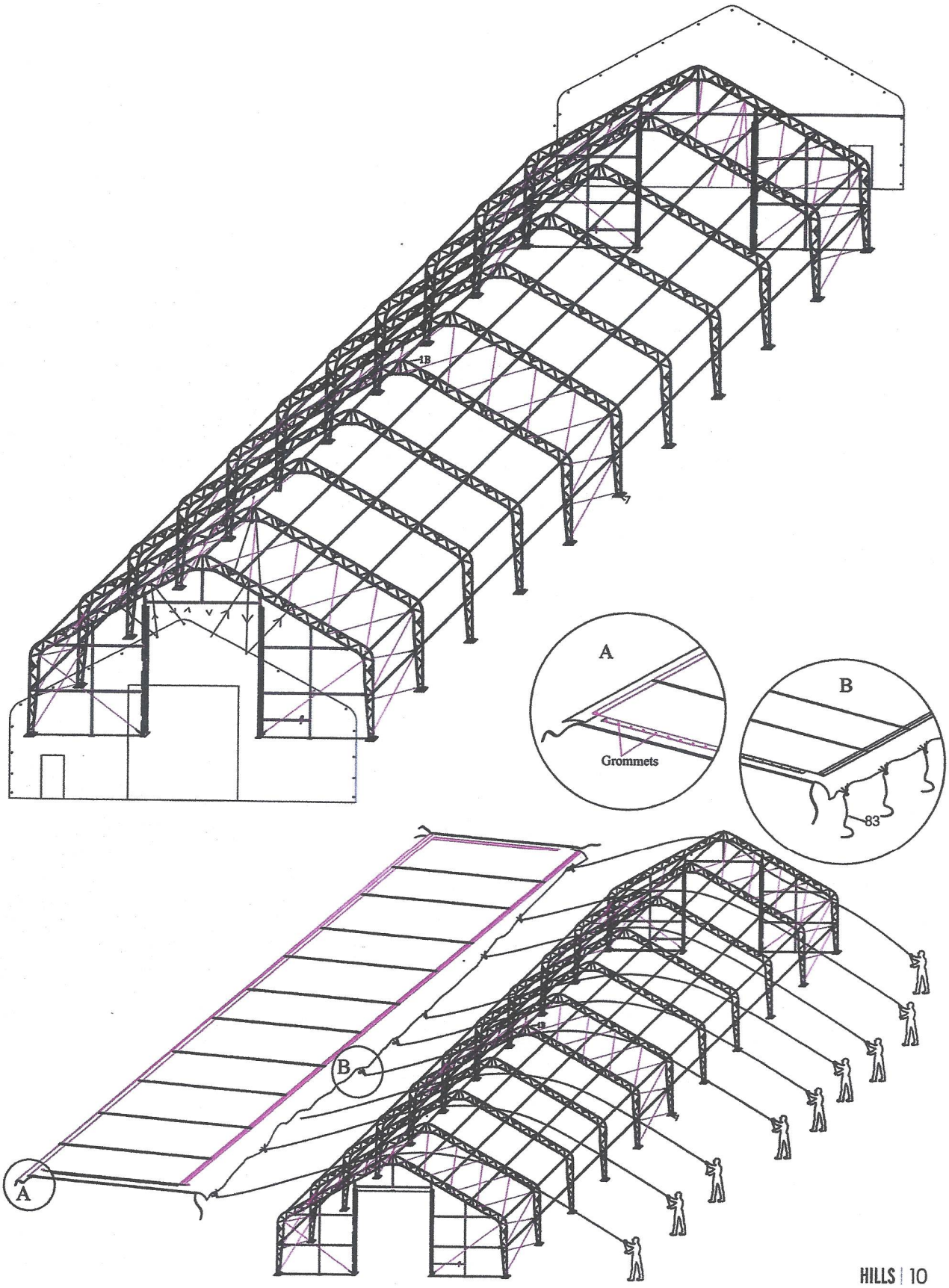
1B
A
Grommets
B
83
B
A

STEP 4 / POSITIONING OF ROOF COVER

As Figure 8 illustrates

when you are ready to install the roof cover, unpack it and lay it parallel to the building frame on one side. The cover must be pulled over the top of the frame assembly without being snagged or stressed on any frame members. As shown in the image below, place multiple ropes over the top of the frame. Having another person inside the frame on a ladder to help get the roof cover over the frame will ensure the cover is not damaged.



80

FIGURE 8 PULL THE ROOF COVER OVER THE FRAME EVENLY

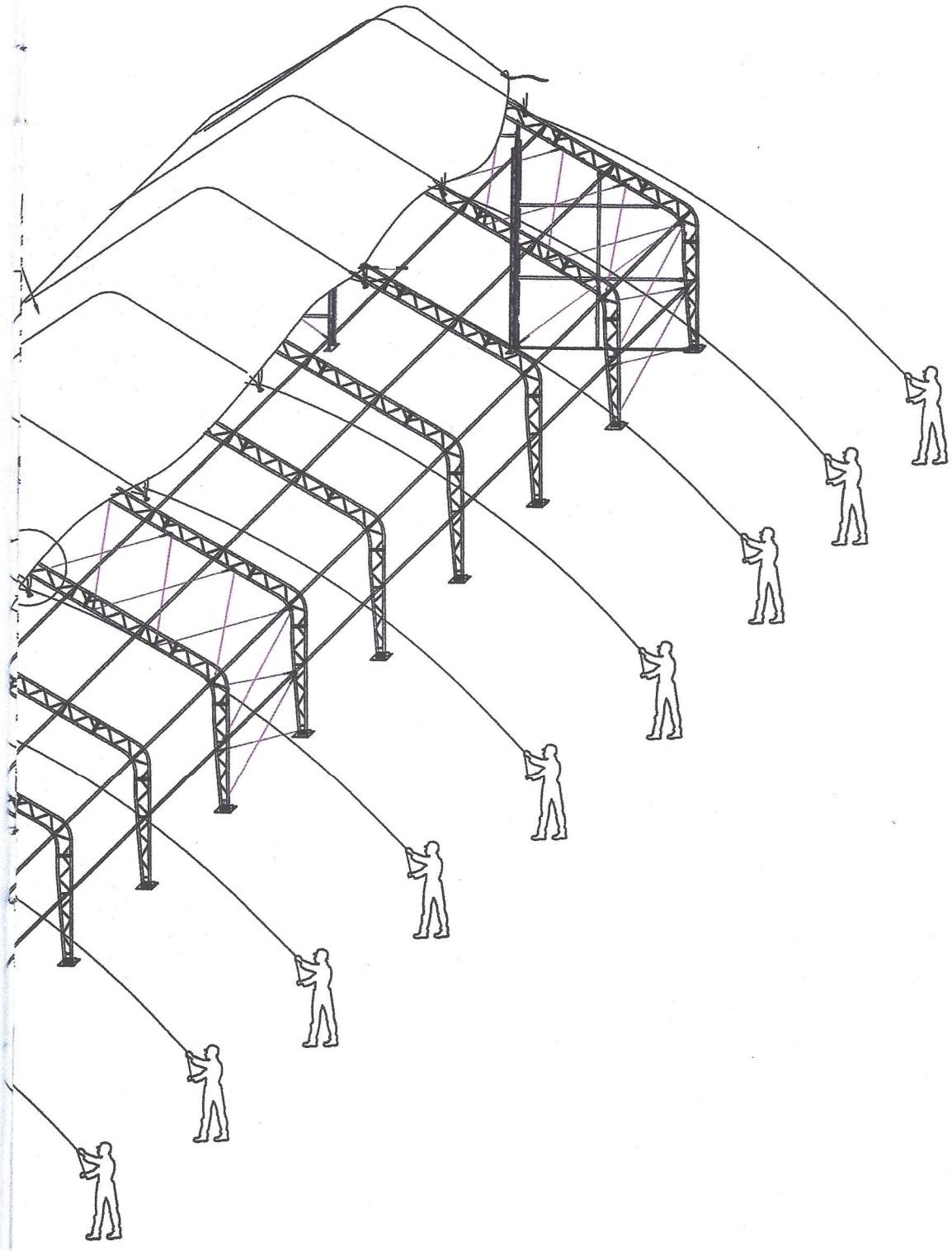

STEP5 TENSION COVER ON FRAME FROM SIDE-TO-SIDE

As shown in Figure 9

Insert the cover tensioning tubes into pockets along both sides of the roof cover once placed over the frame assembly.

From side to side and front to back, center the roof cover over the frame assembly. Align one side of the roof cover evenly from front to back. Add a band for the tie-down ratchet at each point along the cover opening, as shown. Put bands for tie-down ratchets over cover tensioning tubes at each base plate along one side. Bands do not attach to tensioning tubes; instead, they loop around and secure at both ends of the ratchet.

Next, tighten the cover and ratchet the mechanisms to remove any slack in the tie bands. To remove wrinkles from the roof cover, evenly adjust the ratchets on both sides. The cover should not yet be completely tightened. Allow enough slack to adjust the cover from front to back in the next step.

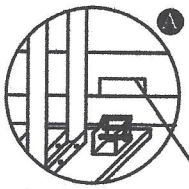

Before inserting the cover tensioning tube (part # 17) into the pocket of the roof cover, make cuts for the ratchet band on the cover. To begin, please outline the cuts following the ratchet position. Cuts should be placed directly on the ratchets.

DRAW THE OUTLINE OF CUTS

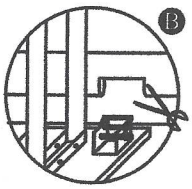

Then, using forFex, make the cuts along the outlines.

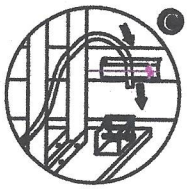

To begin, wrap the tie-down ratchet band (part # 84) around the tensioning tube through the cuts in the roof cover pocket.

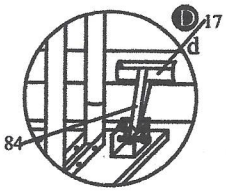

Then, thread the bands through the ratchet reel and tighten the band by ratcheting.

FIGURE 9 FASTENING THE ROOF COVER

STEP 6 TIGHTEN ROOF COVER ON FRAME FRONT TO BACK

The roof cover is tensioned from front to back by the rope lacing to grommet flaps inside the main cover, inside the unit at both the front and rear arches. First, lace the main cover grommet flap around the front and back arch pieces of the main frame with the provided rope. Next, lace each side starting in the top middle of each arch. Rope length can be increased by tying pieces together or cutting as needed.

A rope should be used to secure all grommets on the cover and inside flap. Tighten the lacing only enough to remove wrinkles from the cover, beginning at the middle top point over the door. Repeat for the back arch. DO NOT tighten the lacing too much to force the grommets out.

Go back and re-adjust the tensioning ratchets along the side edges of the roof cover after the roof cover lacing has been adjusted evenly across the grommet flap. Finally, the main cover can be pulled taut enough to remove all excess material and wrinkles. After the unit has been assembled and the roof cover has had a chance to stretch out completely over the frame, this step will need to be repeated for another 2-3 weeks.

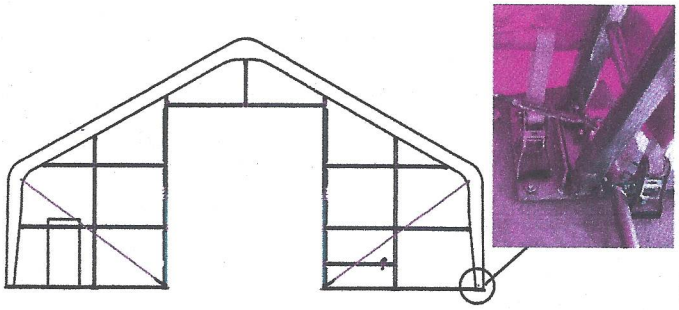

FIGURE 10 INSTALLATION OF FRONT PANEL COVER

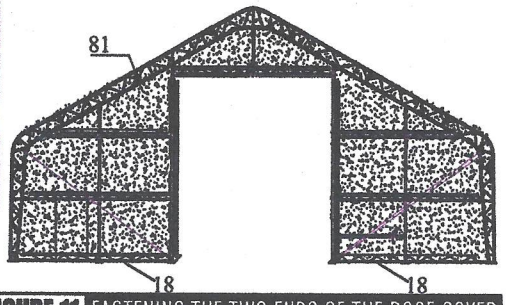

FIGURE 11 FASTENING THE TWO ENDS OF THE ROOF COVER

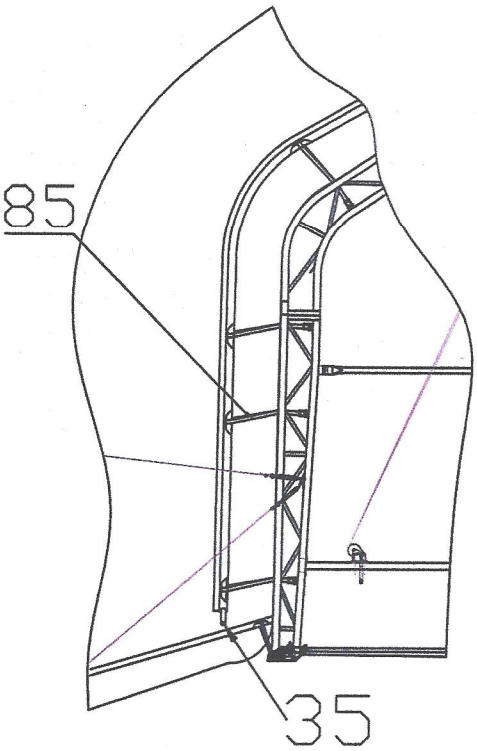

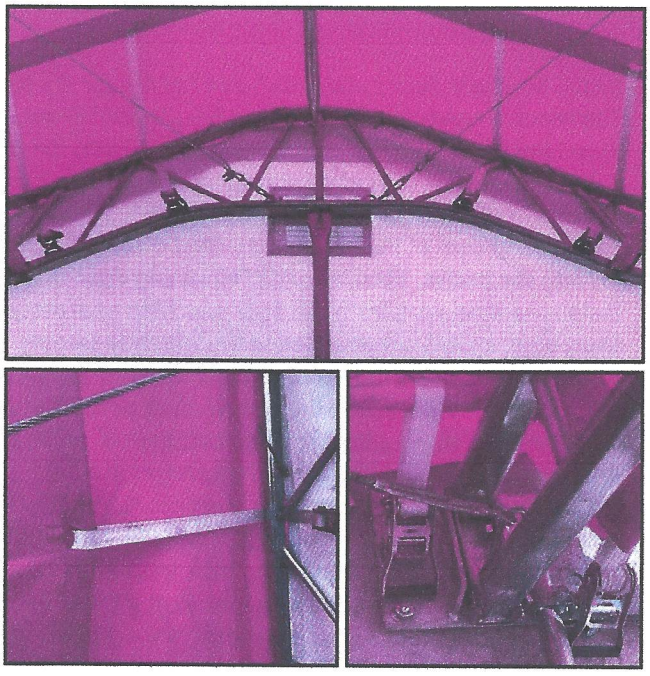

STEP7 INSTALLING THE MECHANICAL DOOR

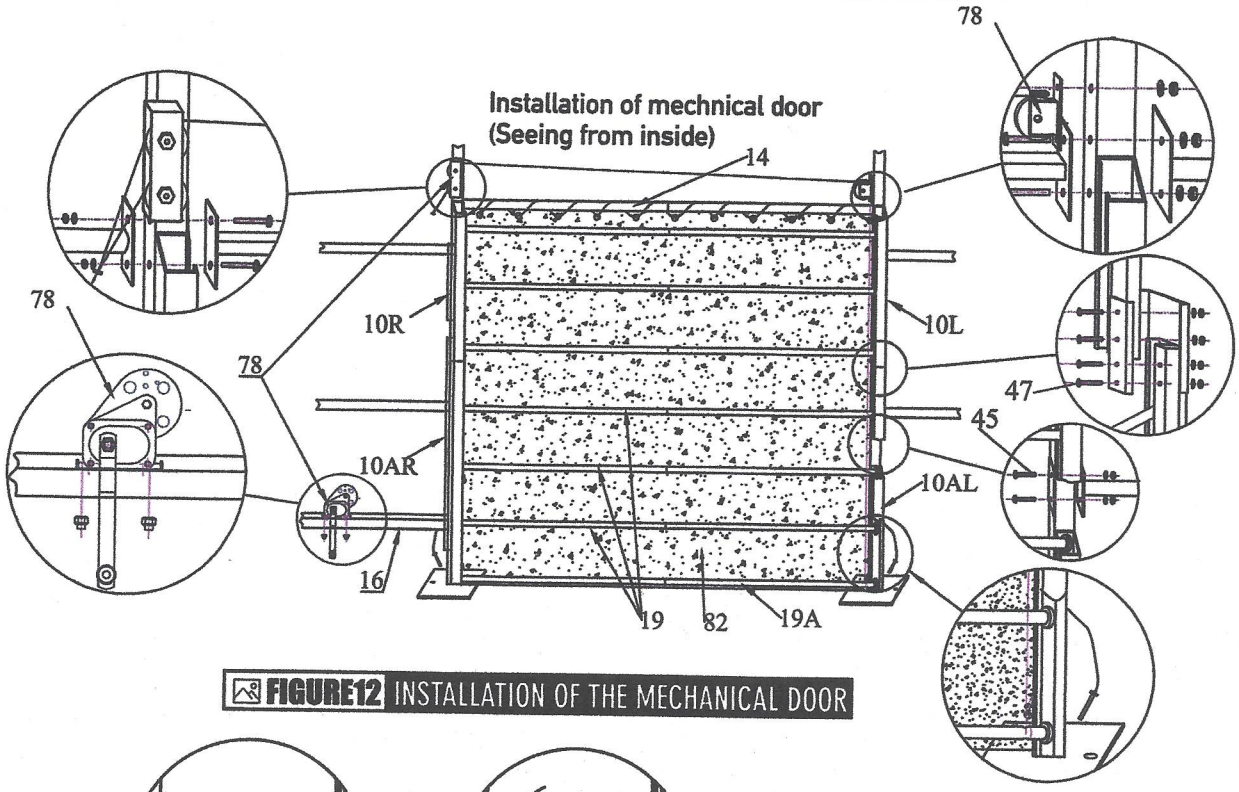

FIGURE12 INSTALLATION OF THE MECHANICAL DOOR

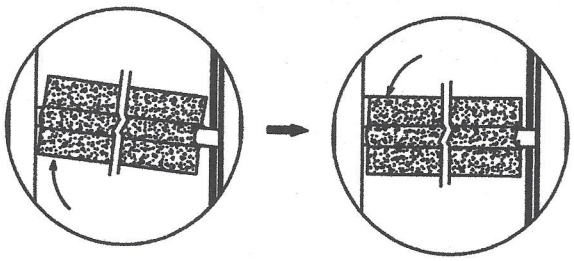

Door dropping tube assembly

1. Install the main door pulleys (left and right) over the top of the door on each side of the door beam.
2. The winch mechanism should then be attached to the lower front panel beam (part # 16).
3. Insert the bottom door drop tube (part # 19A) into the bottom horizontal fabric pocket on the door cover (part # 82). Then, insert the remaining six door dropping tubes (part # 19) into the remaining horizontal fabric pockets in the door cover.
4. From the bottom of the door tracks (part # 10, 10A), gently raise and slide one door, dropping tube (part # 19) into the tracks. Then feed the remaining door-dropping tubes (part # 19, 19A) into the door tracks.
5. Install the steel wire from the door winching assembly to the bottom of the door-dropping tubes. Long and short steel cables are attached to the winch assembly. Feed the shorter of the two cables through the lower roller of the double pulley at the top of the door assembly track closest to the winch assembly and then down through the holes in the bottom door dropping tube (part # 19A) on the left side of the door (facing from the inside). Tie a knot in the steel cable after it has passed through the hole in the bottom door dropping tube (part # 19A) so that it cannot pass back up through the hole.
6. Route the leading end of the long steel cable from the winch assembly through the upper roller of the double pulley on the near door track and then through the single roller on the far door track. Then descend through the bottom door dropping tube (part # 19A). Tie a knot in the steel cable after it has passed through the bottom door dropping tube's hole (part # 19A). The winch assembly can now be used to open or close the door. To ensure the door tube ends are not stuck on the track, raise and lower the door several times. Lubricate if necessary.

AFTER-SALES

MAINTENANCE AND CARE

1. If some parts or the cover were accidentally damaged while in use, contact the local supplier for advice on the best repair method or replacements to prevent further damage and keep the building in good condition.

2. Ensure the entire frame and the parts connected to the replaced parts are securely fastened or supported when replacing the parts.

3. Pick a windless day to replace the cover, as you did when attaching it. Begin by ensuring that all bolts in the frame and the tensioning equipment are securely fastened. Ensure the associated ropes are removed before removing the cover and that the cover is not obstructed. With heavy, high-powered equipment, avoid pulling the cover.

4. Keep the building with the mechanical door closed if it hasn't been used in a while. This prolongs the life of the mechanical door.

5. Put small pieces of duct tape or foam rubber (provided by yourself) on the frame that comes into contact with the cover to extend the life of the cover. The tape and foam rubber act as a cushion to prevent rubbing damage to the cover over time.

6. The building should be inspected regularly (at least once every half year) and maintained internally and externally to ensure the building is adequately installed and secure. Check all bolts and hardware connectors to ensure they are in place and tightened, ensuring the base plates are still securely fastened, and checking and adjusting the ropes as needed. Clean the cover with suitable washing. Allowing dirt and debris to sit on the cover for an extended period will irreparably damage it.

Thank you again for selecting this high-quality product.