# SHELTER INSTALLATION MANUAL

# MODEL:AP406024T

# W12.2*L18.3*H7.3M

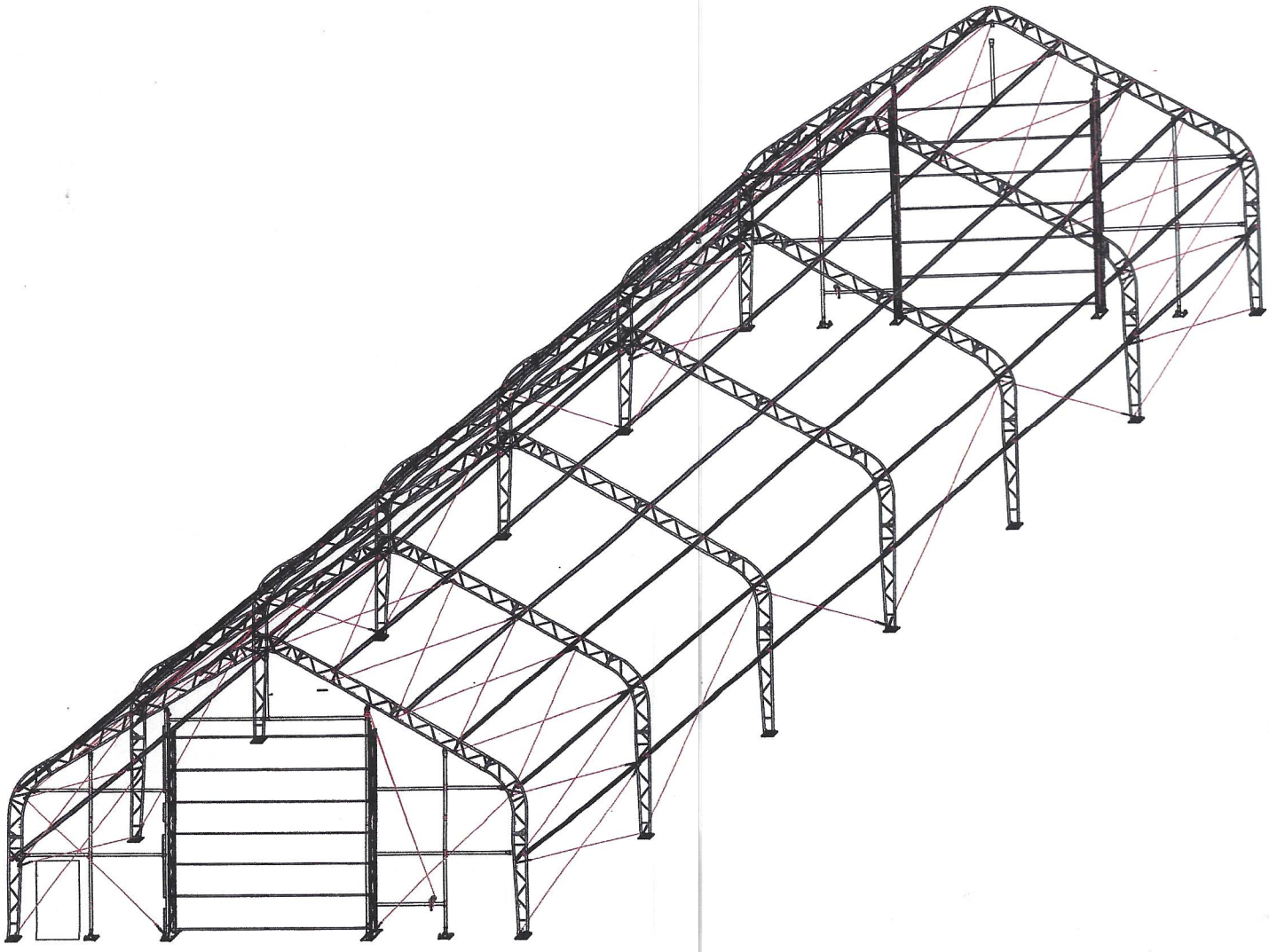

# SAFETY ADVICE

Congratulations on your purchase of our instant shelter. This unit combines excellent manufacturing and design. It has a strong frame and a durable cover. All components have been coded for ease of assembly. Your unit will provide many years of excellent and suitable service with proper installation, use, and maintenance.

## READ ALL INSTRUCTIONS BEFORE ASSEMBLY!

1. The proper erection and installation of this building necessitate a high level of care and safety. During the installation, we recommend that all safety regulations be followed. It includes, but is not limited to:
   - Safety hats, protective eyewear, and protective clothing;
   - Safety harnesses for all elevated workers;
   - Proper ladder, cage, and safety operation.

2. Site selection: Select a stable, level location for your structure. Install the building in a location where the ground can support it. Install the structure in an area where the ground can support its weight. Do not place the structure in a wetland or soft grass.

3. Be aware of your surroundings. Maintain a clean workspace. Avoid setting it up near snow drifts or in slick or wet areas. The building's cover will protect against typical falling leaves and light debris; however, large, fast, or sharp falling items may cause a puncture or tear in the cover material. So, keep such things out of the building. Use caution when using heat and power sources. Avoid keeping heat sources close to the tarp. Avoid being exposed to open flames.

4. Pick a windless day to install the structure. In a strong wind, attaching the cover is extremely difficult.

5. The main cover should have all snow removed as soon as possible. Otherwise, when old snow on the roof hardens and new snow falls in, the burden is significantly increased, and the roof is damaged.

6. Keep the building, especially its base, dry. It will help the building last longer than if kept in wet conditions.

7. The user should be held accountable for missing or damaged parts during the installation.

8. Do not change the frame. Instead, hang only the included parts to the frame. The user is responsible for any damages, consequential damages, or injuries caused by improper installation, alteration, or use, as well as damages caused by snow, wind, or other natural disasters. The structure is intended to be occupied for long periods.

## ASSEMBLY PROCEDURE

1. Prepare the location and place all unit boxes there. Before beginning, conduct an inventory check to ensure that all components are available for installation.
2. Fix the base plate flanges to the base.
3. Assemble each group of arches.
4. Begin frame assembly with the front-end arch, first interior arch, purlins, etc.
5. Add to the assembly of other arches.
6. Over the frame, attach the main cover.
7. Install end covers over the end panels.

# REQUIRED TOOLS

Refer to the following tools that will be used to install your new building properly:

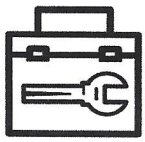

A SET OF WRENCHES



A PAIR OF SCISSORS



RULER



HAMMER



FORKLIFT (Safety cage)
OR LIFTING PLATFORM

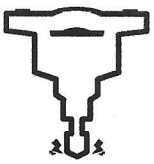

IMPACT DRILL

GET YOUR TOOLS READY →

| Part Code | Description | Quantity |
|---|---|---|
| 1 | Top roof truss | 3 |
| 1A | Top roof truss for front and back panel | 2 |
| 1B | Top roof truss for steelwire installation | 2 |
| 2 | Upper roof truss | 6 |
| 2A | Upper roof truss for front and back panel | 4 |
| 2B | Upper roof truss for steelwire installation | 4 |
| 3 | Lower roof truss | 6 |
| 3A | Lower roof truss for front and back panel | 4 |
| 3B | Lower roof truss for steelwire installation | 4 |
| 4A | Shoulder truss for front and back panel | 4 |
| 4B | Shoulder truss | 10 |
| 5 | Sidewall truss | 6 |
| 5A | Sidewall truss for front and back panel | 4 |
| 5B | Sidewall truss for steelwire installation | 4 |
| 6L | Base plate for left corner | 2 |
| 6R | Base plate for right corner | 2 |
| 7 | Base plate for sidewall | 10 |
| 8 | Base plate for door | 4 |
| 8A | Base plate for front and back panel | 4 |
| 10R | Upper door right frame | 2 |
| 10L | Upper door left frame | 2 |
| 10AR | Upper door right frame | 2 |
| 10AL | Upper door left frame | 2 |
| 11 | Upper vertical tube for front and back panel | 4 |
| 11A | Lower vertical tube for front and back panel | 4 |
| 12 | Upper rail for sides of front and back panel | 4 |
| 13 | Lower rail for sides of front and back panel | 4 |
| 14 | Door beam | 2+2 |
| 14A | Hanging tube for door beam | 2 |
| 15 | Rail beside door | 8 |
| 16 | Rail for hand winch | 2 |
| 17 | Tensioning tube for roof cover | 12+2 |
| 18 | Tensioning tube for front and back panel | 4+4 |
| 19 | Door tube | 12+12 |

| | | |
|---|---|---|
| 19A | Bottom door tube | 2+2 |
| 31 | Horizontal tube | 66 |
| 35 | PE tube | 16+2 |
| 39 | Plastic cap for tensioning tube | 8+4 |
| 40 | Hexagon bolt M10*30 | 20 |
| 40A | Carriage bolt M10*30 | 82 |
| 45 | Hexagon bolt M10*75 | 54 |
| 47 | Hexagon bolt M10*85 | 80 |
| 51 | Hexagon bolt M12*25 | 230 |
| 53 | Hexagon bolt M14*30 | 60 |
| 59A | Wrench | 2 |
| 60 | Turn buckle kit(M12) | 60+120 |
| 68 | Anchor bolts(M16*200) | 80 |
| 70 | Steelwire for roof(Φ8*3.8M) | 48 |
| 72 | Steelwire for front and back panel(Φ8*5M) | 4 |
| 72 | Steelwire for sidewall(Φ8*5M) | 8 |
| 78 | Hand winch and pulley | 2 |
| 80 | Roof cover | 1 |
| 81 | Cover for front and back panel | 2 |
| 82 | Cover for door | 2 |
| 83 | Rope for cover installation(Φ8*15M) | 13 |
| 84 | Band for ratchet(90CM) | 14 |
| 85 | Band for PVC tube(2.5M) | 44 |
| 86 | Anti-wear pad(10*20) | 56 |
| 87 | Zap straps | 56 |

## FIGURE 1

## SKETCH OF MODEL 406024T (W12.26*L18.28*H7.3M)

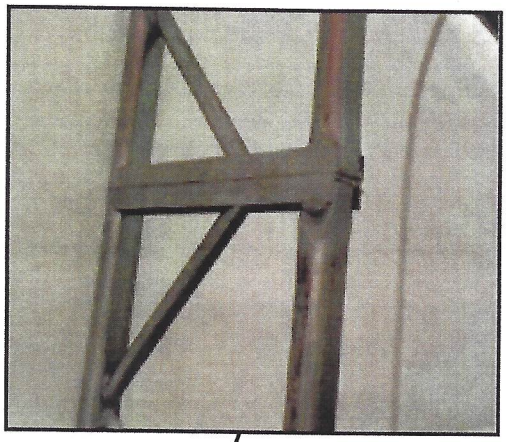

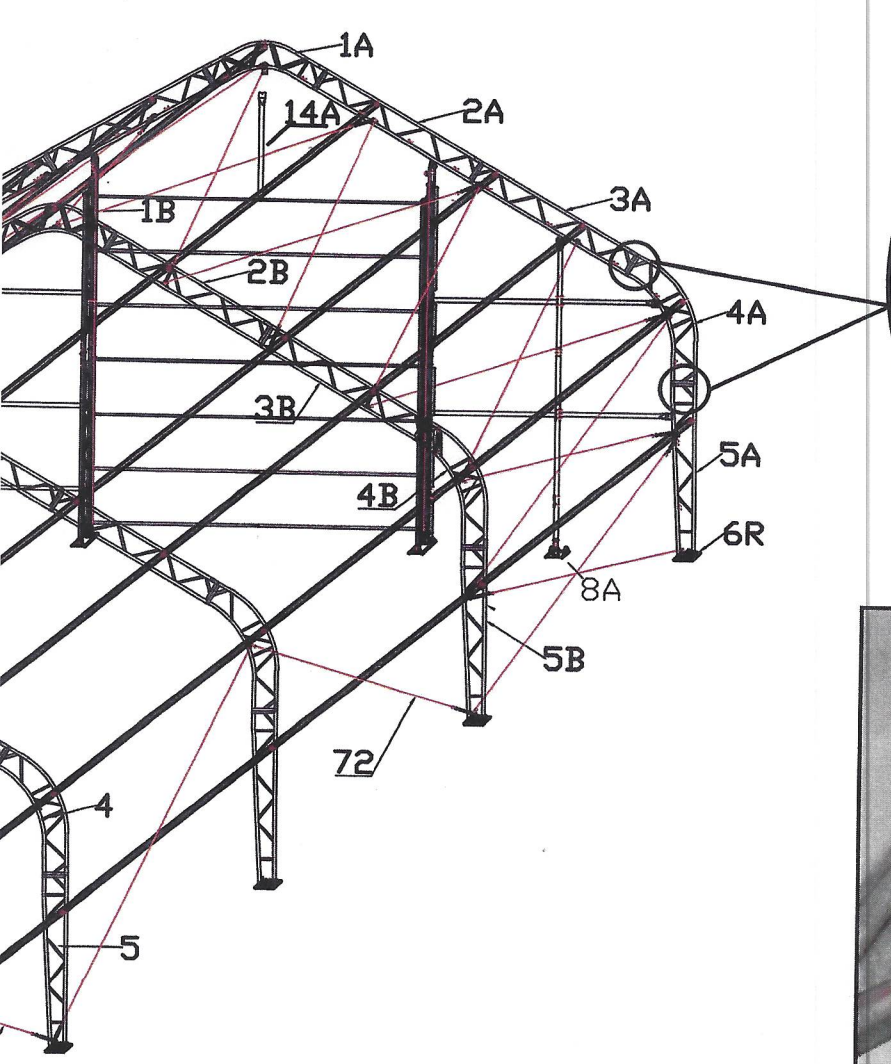


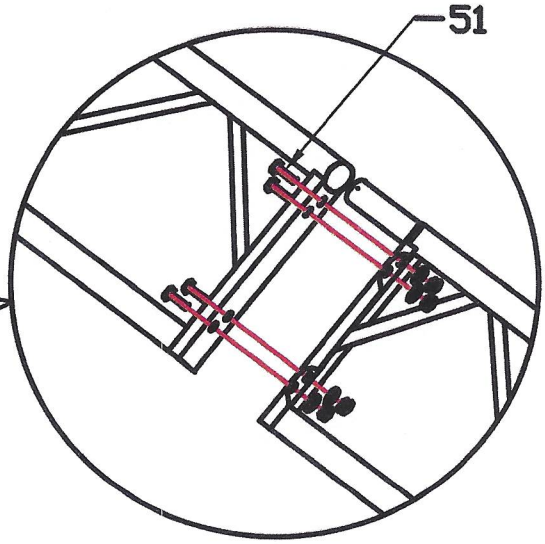


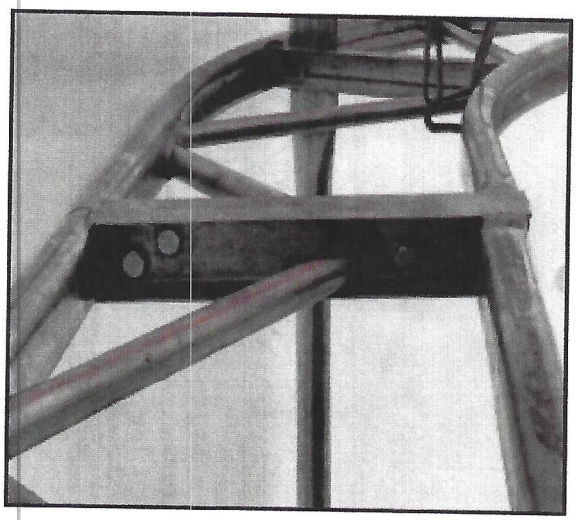

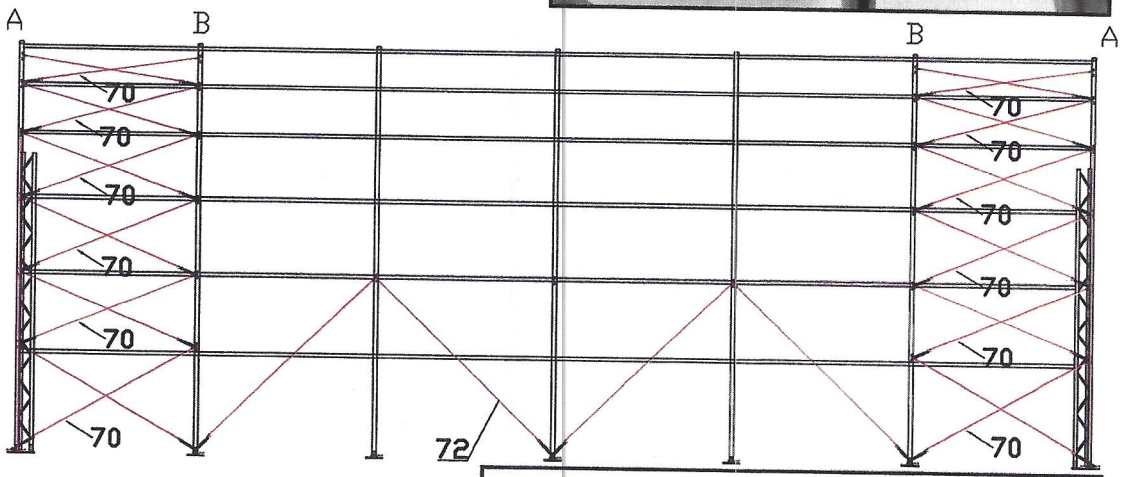


SIDE ELEVATION DRAWING

# STEP 1 ARCH ASSEMBLY

Assemble the arches, including the base plates, and place them on the ground first. DO NOT erect them until all of the arches are assembled.

## Each arches consist of:

One Top roof tube (Part # 1/1A/1B), Two Roof curving tubes (part # 2/2A/2B), Two Roof curving tubes at shoulder height (Part # 4/4A/4B), Two Sidewall tubes (Part # 5/5A/5B/5C), and Two Base plates (Part # 6L/6R/7)

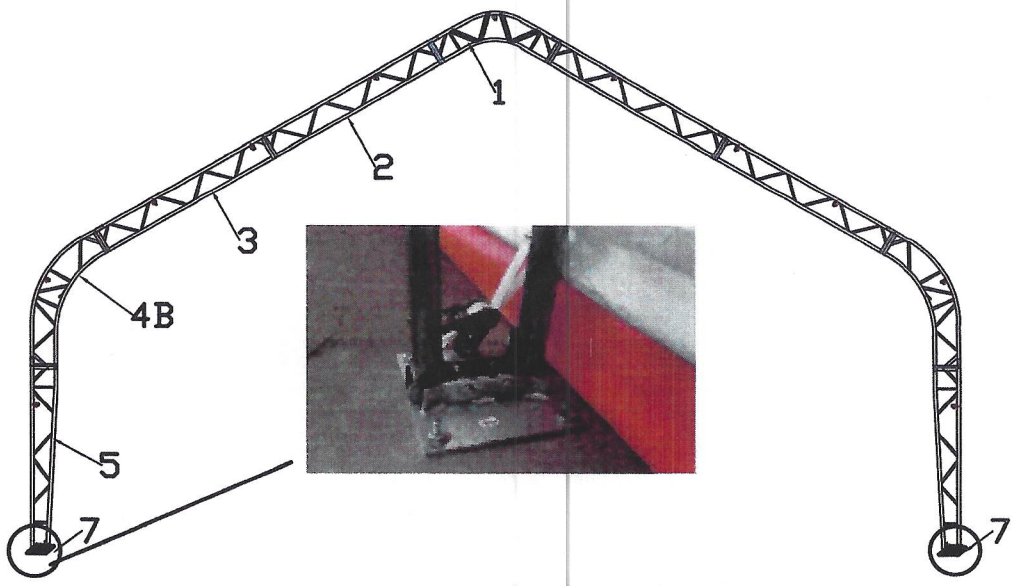


**FIGURE2** THE MIDDLE ARCH

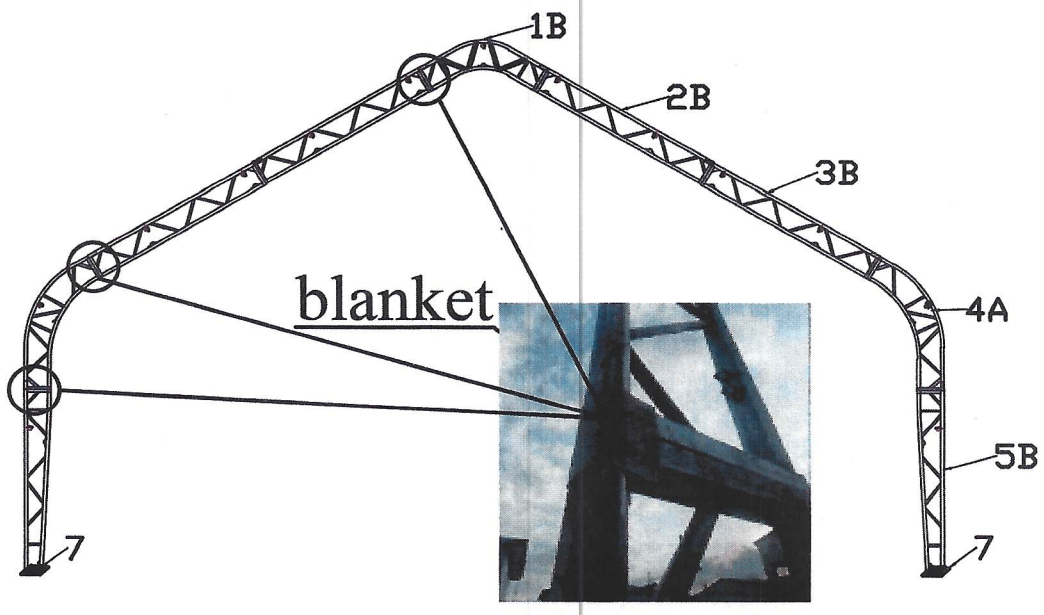


**FIGURE3** THE MIDDLE ARCH

**NOTE:**

Connect the arches using hexagon bolts with washers and nuts (part # 51) through predrilled holes in frame members.

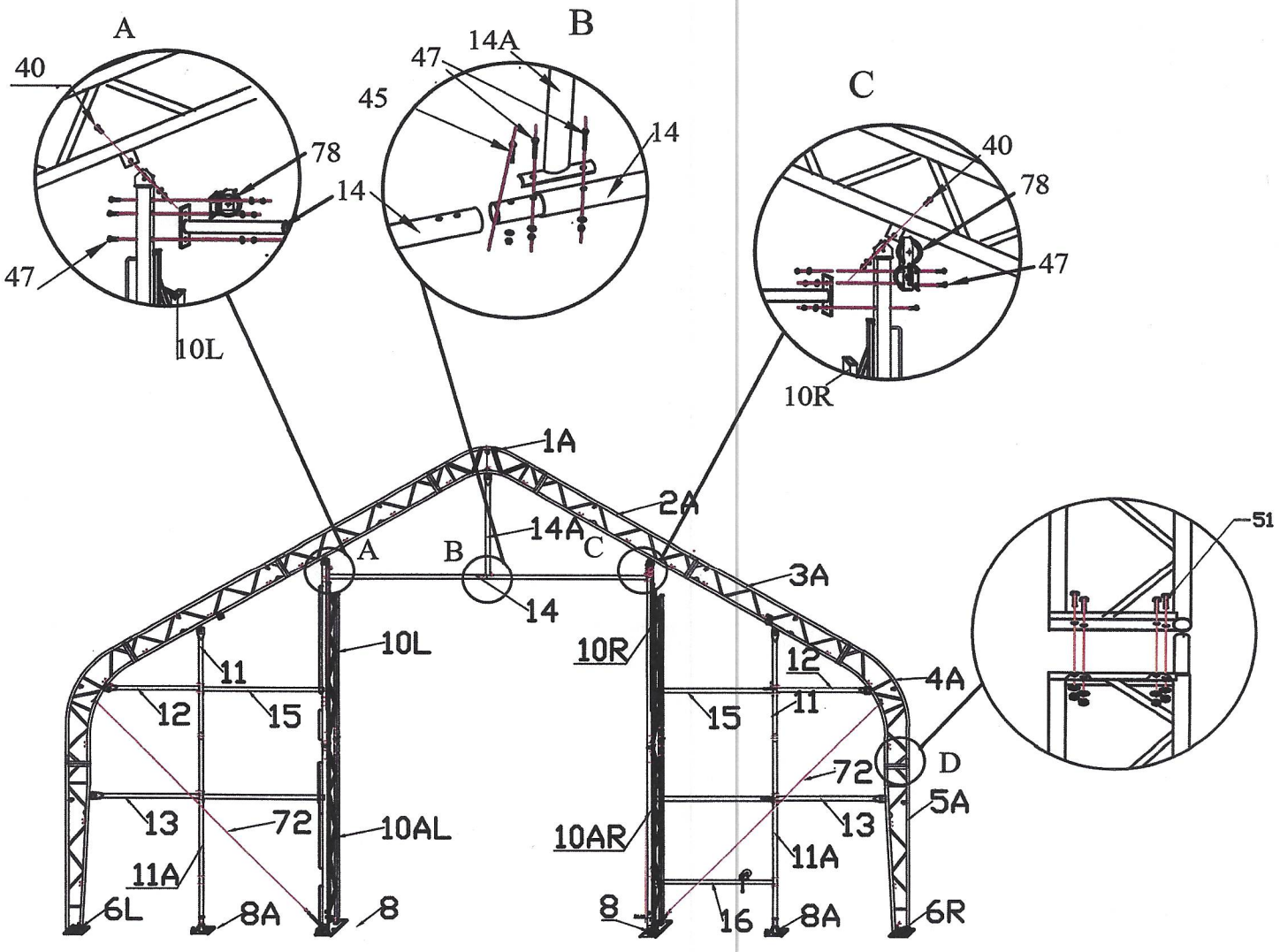


**FIGURE 4** FRONT AND BACK PANEL ARCH

# STEP2 ERECTING THE ARCHES

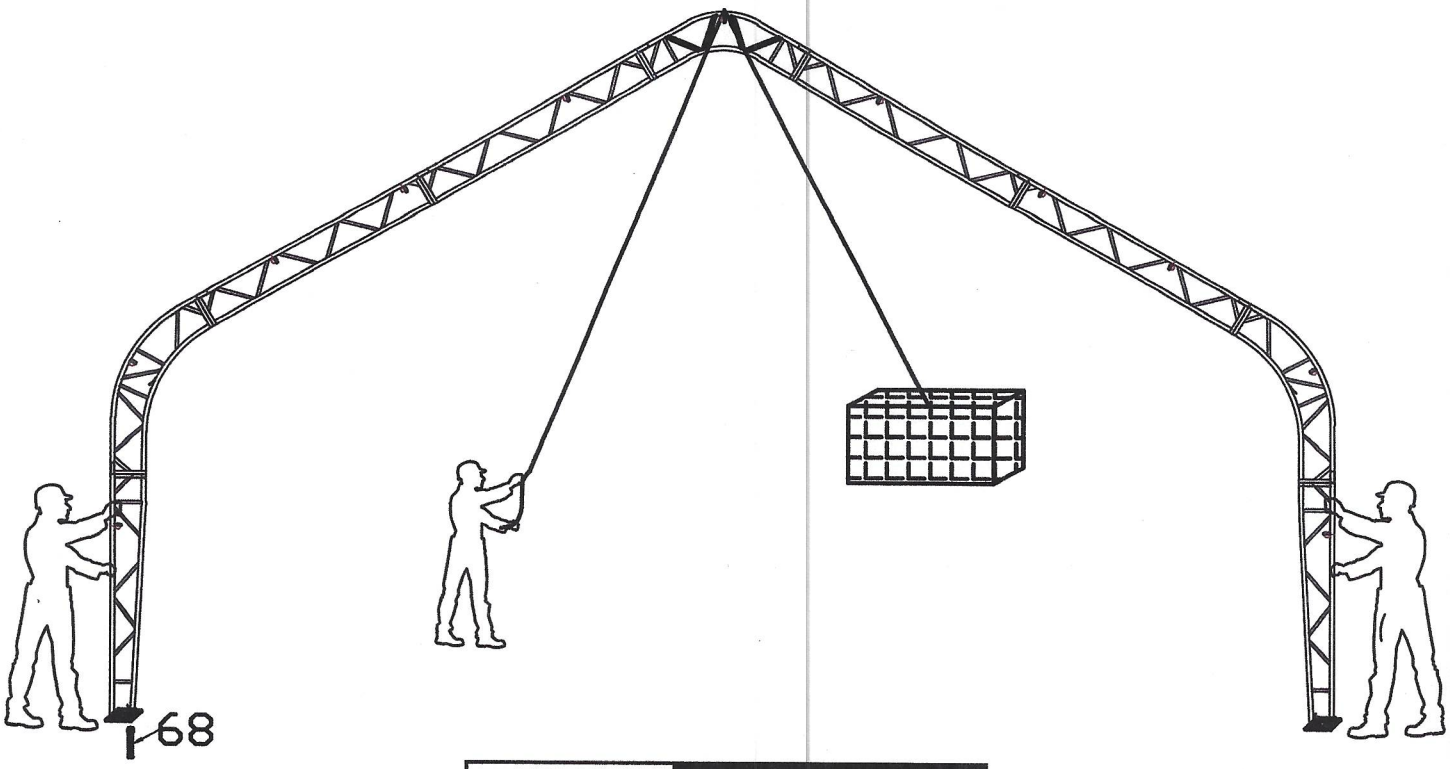


**FIGURE 5** ERECTING AN ARCH

**As shown in Figure 5**

erect the front arch with ropes and tie and secure the rope on some heavy objects to temporarily secure the arch. Stake pegs (part # 68) should then be used to secure the base plates to the ground.

# STEP3 ASSEMBLING THE ROOF PURLINS

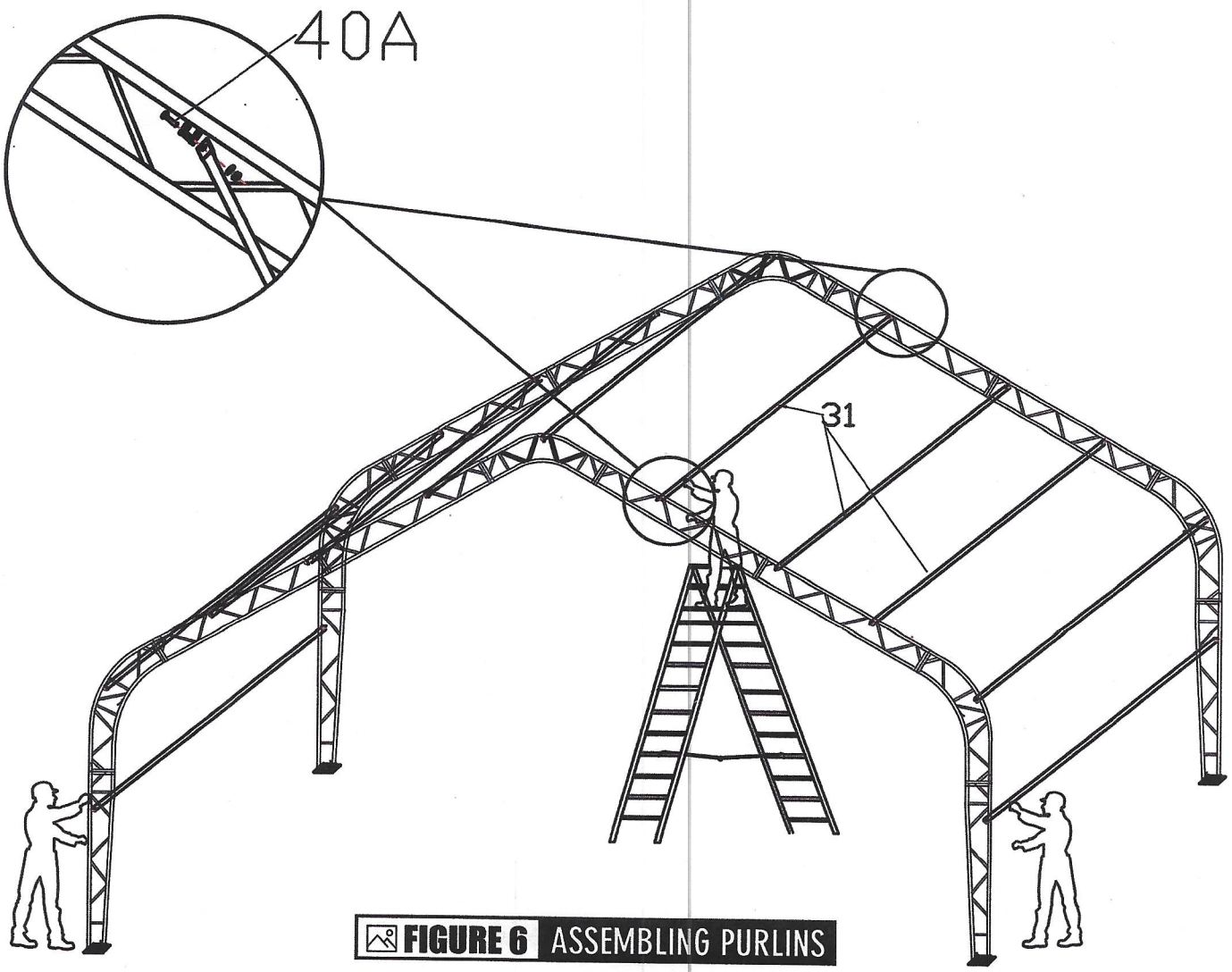


**FIGURE 6** ASSEMBLING PURLINS

Immediately after erecting the front arch, erect the second arch similarly. Then, as shown in Figure 6, attach the two erected arches using roof purlin tubes. Use carriage bolts and nuts (part # 40A) to secure the roof purlin tubes.

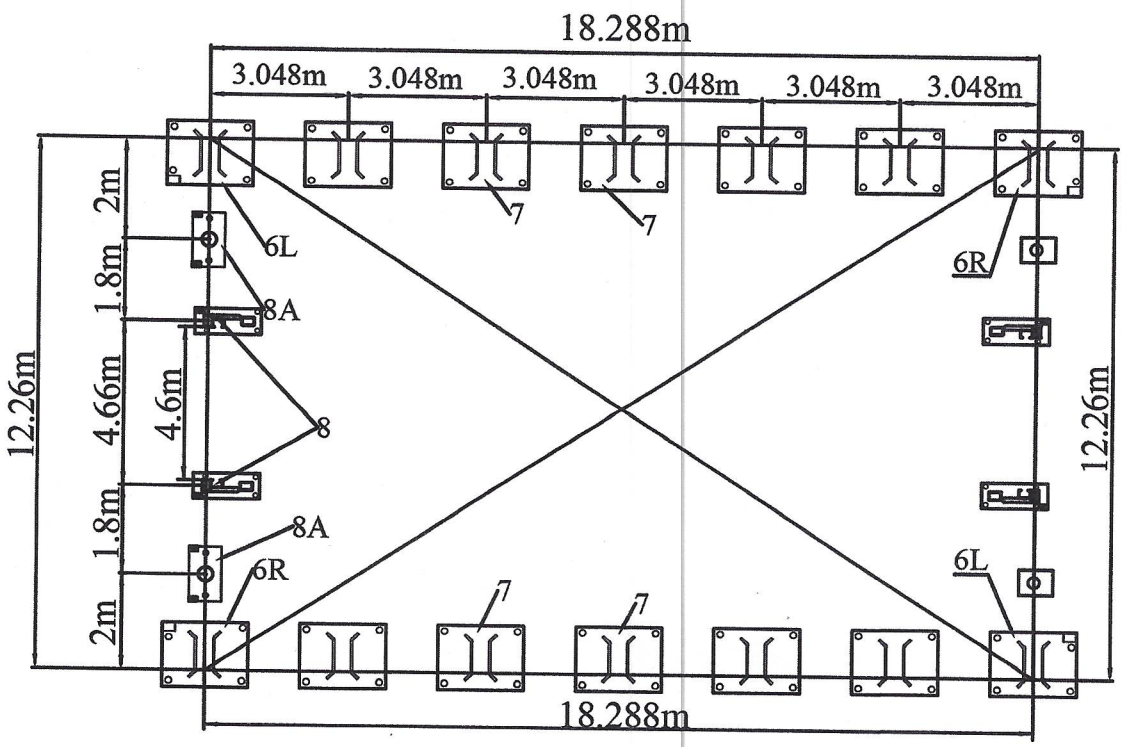


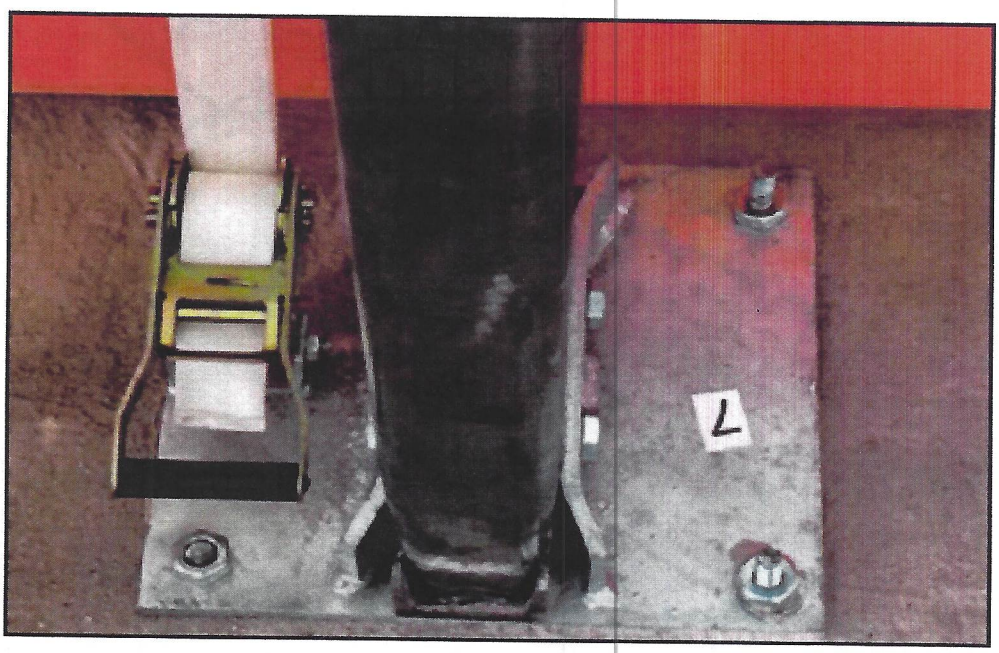


**FIGURE 7** POSITIONING OF BASE FLANGES

The shelter must be secured to a firm surface that can receive and hold pegs firmly in place.
The shelter should be installed on FIRM GROUND rather than on SWAMPY, SOFT, or WET GROUND.
The base flanges must be secured so that they cannot be moved.

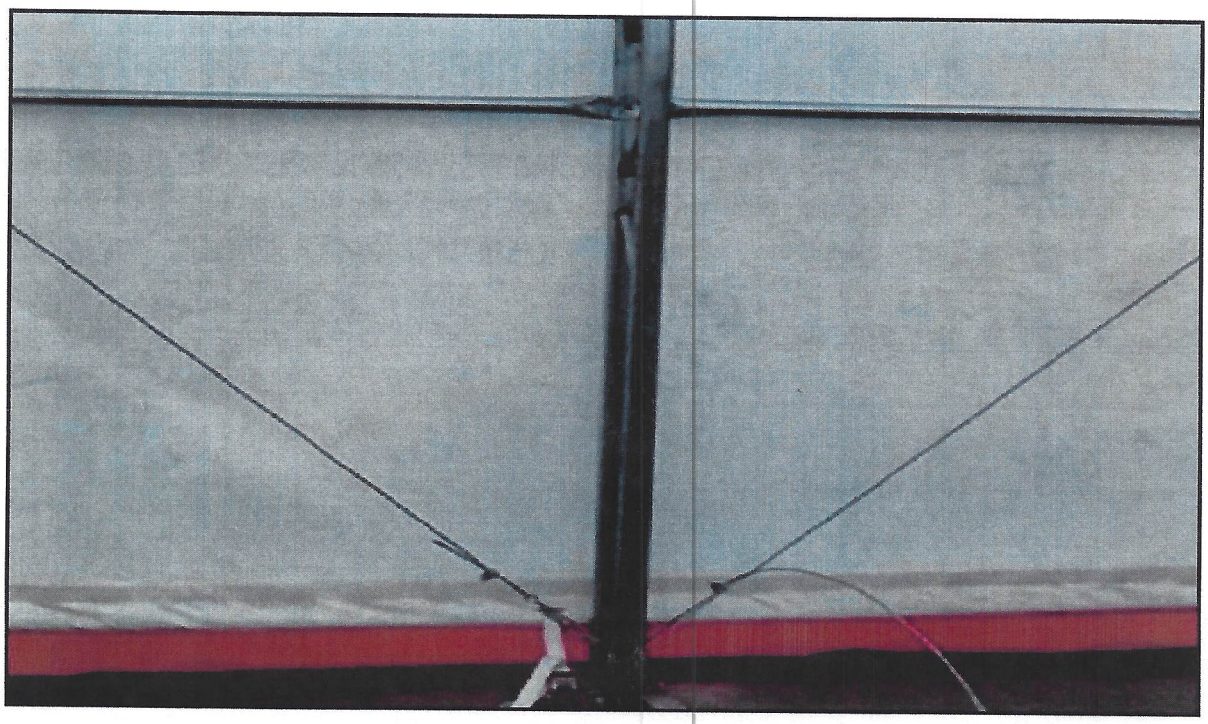

## STEELWIRE INSTALLATION

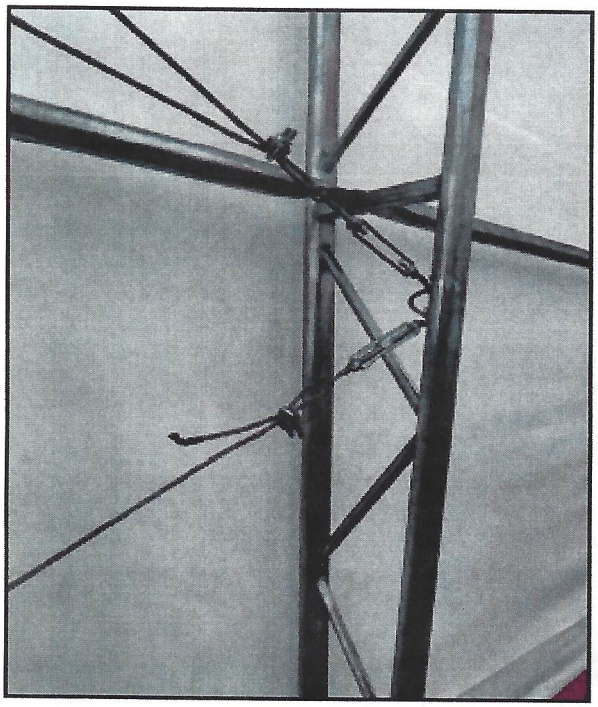

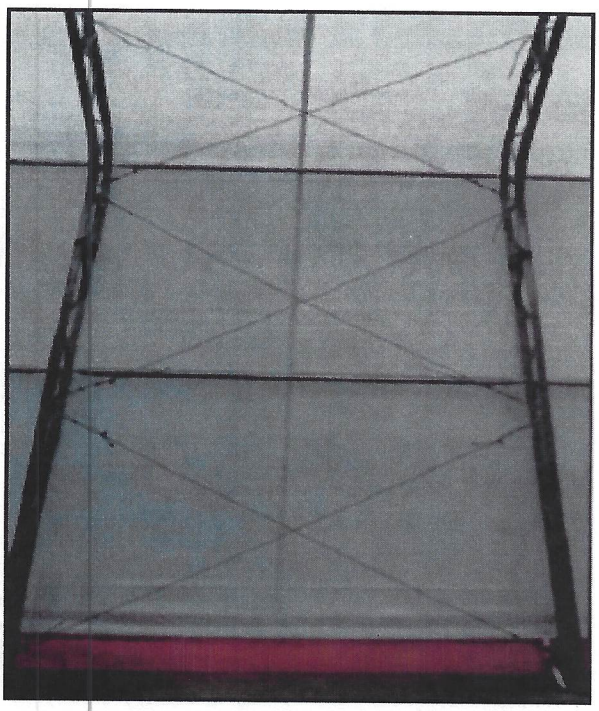

# STEP 4 POSITIONING OF ROOF COVER

**As Figure 8 illustrates**

when you are ready to install the roof cover, unpack it and lay it parallel to the building frame on one side. The cover must be pulled over the top of the frame assembly without being snagged or stressed on any frame members. As shown in the image below, place multiple ropes over the top of the frame. Having another person inside the frame on a ladder to help get the roof cover over the frame will ensure the cover is not damaged.

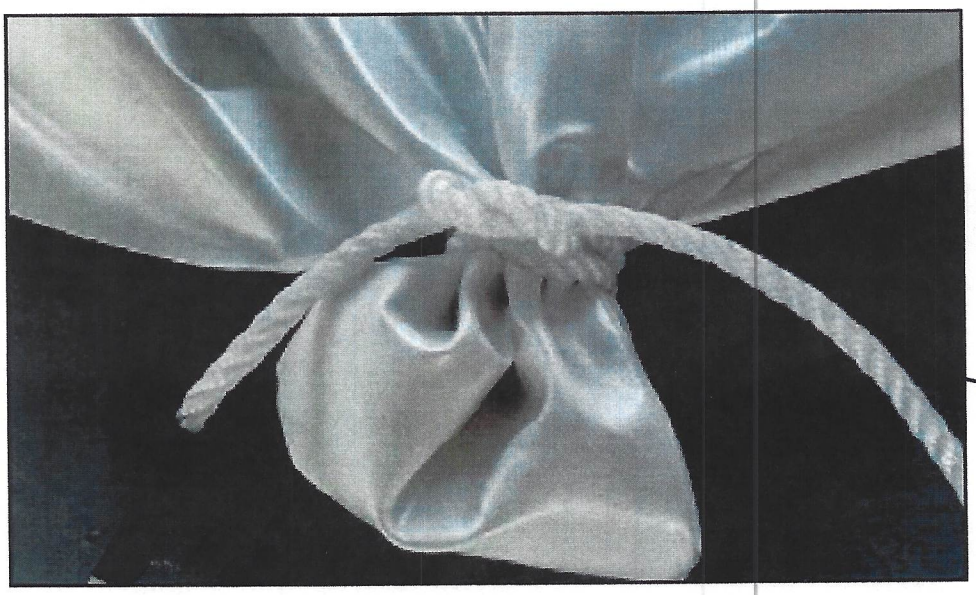

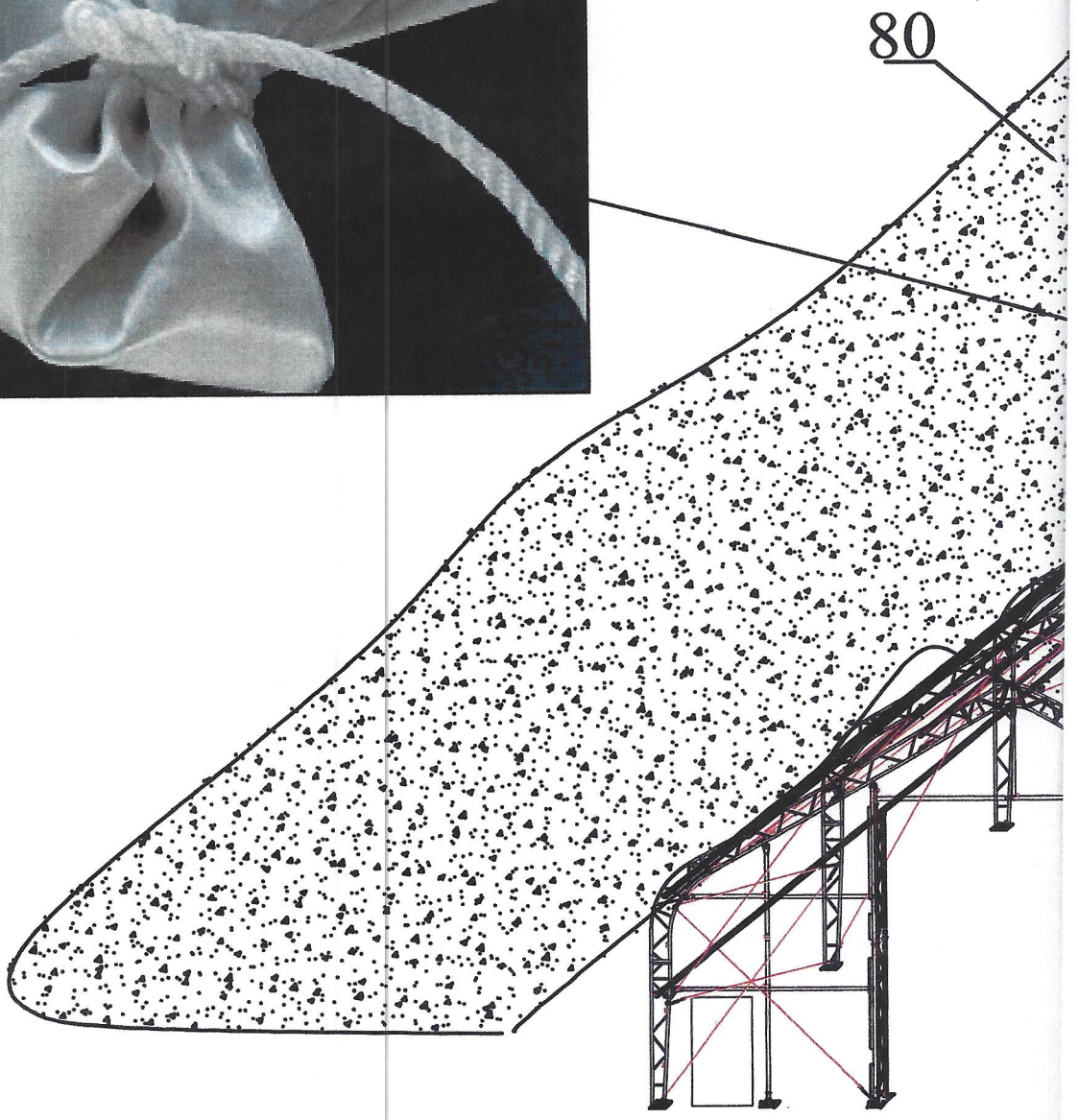

**FIGURE 8** PULL THE ROOF COVER OVER THE FRAME EVENLY

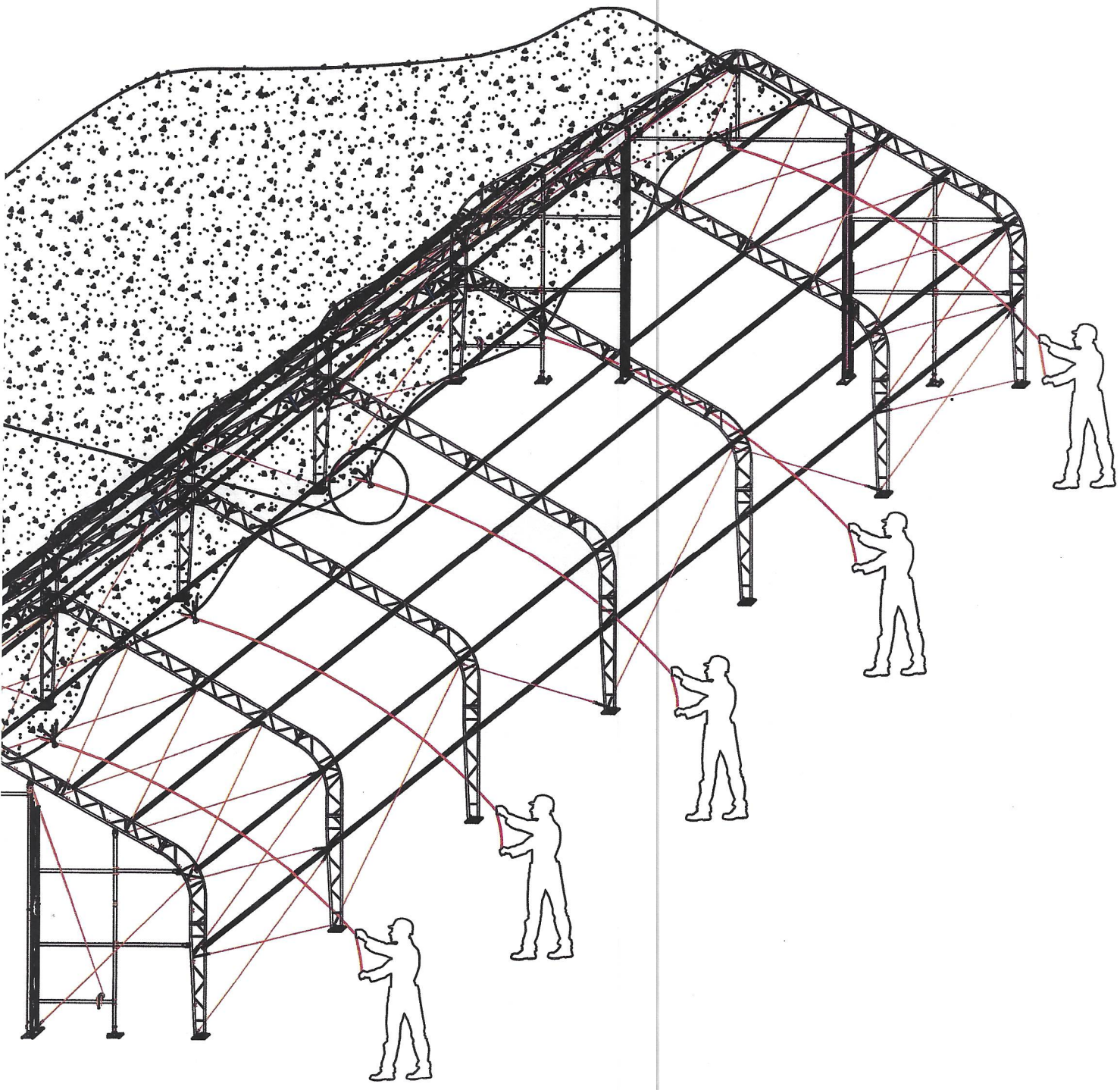

# STEP5 TENSION COVER ON FRAME FROM SIDE-TO-SIDE

As shown in Figure 9

Insert the cover tensioning tubes into pockets along both sides of the roof cover once placed over the frame assembly.

From side to side and front to back, center the roof cover over the frame assembly. Align one side of the roof cover evenly from front to back. Add a band for the tie-down ratchet at each point along the cover opening, as shown. Put bands for tie-down ratchets over cover tensioning tubes at each base plate along one side. Bands do not attach to tensioning tubes; instead, they loop around and secure at both ends of the ratchet.

Next, tighten the cover and ratchet the mechanisms to remove any slack in the tie bands. To remove wrinkles from the roof cover, evenly adjust the ratchets on both sides. The cover should not yet be completely tightened. Allow enough slack to adjust the cover from front to back in the next step.

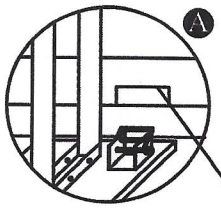


Before inserting the cover tensioning tube (part # 17) into the pocket of the roof cover, make cuts for the ratchet band on the cover. To begin, please outline the cuts following the ratchet position. Cuts should be placed directly on the ratchets.

DRAW THE OUTLINE OF CUTS

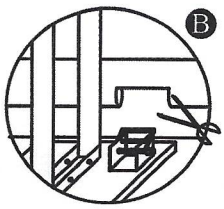


Then, using forFex, make the cuts along the outlines.

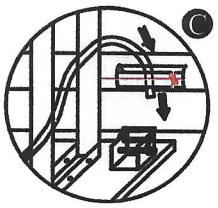


To begin, wrap the tie-down ratchet band (part # 84) around the tensioning tube through the cuts in the roof cover pocket.

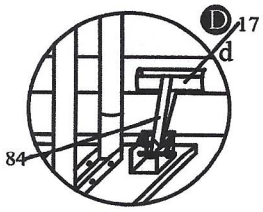


Then, thread the bands through the ratchet reel and tighten the band by ratcheting.




**FIGURE 9** FASTENING THE ROOF COVER

# STEP 6 TIGHTEN ROOF COVER ON FRAME FRONT TO BACK

The roof cover is tensioned from front to back by the rope lacing to grommet flaps inside the main cover, inside the unit at both the front and rear arches. First, lace the main cover grommet flap around the front and back arch pieces of the main frame with the provided rope. Next, lace each side starting in the top middle of each arch. Rope length can be increased by tying pieces together or cutting as needed.

A rope should be used to secure all grommets on the cover and inside flap. Tighten the lacing only enough to remove wrinkles from the cover, beginning at the middle top point over the door. Repeat for the back arch. DO NOT tighten the lacing too much to force the grommets out.

Go back and re-adjust the tensioning ratchets along the side edges of the roof cover after the roof cover lacing has been adjusted evenly across the grommet flap. Finally, the main cover can be pulled taut enough to remove all excess material and wrinkles. After the unit has been assembled and the roof cover has had a chance to stretch out completely over the frame, this step will need to be repeated for another 2-3 weeks.

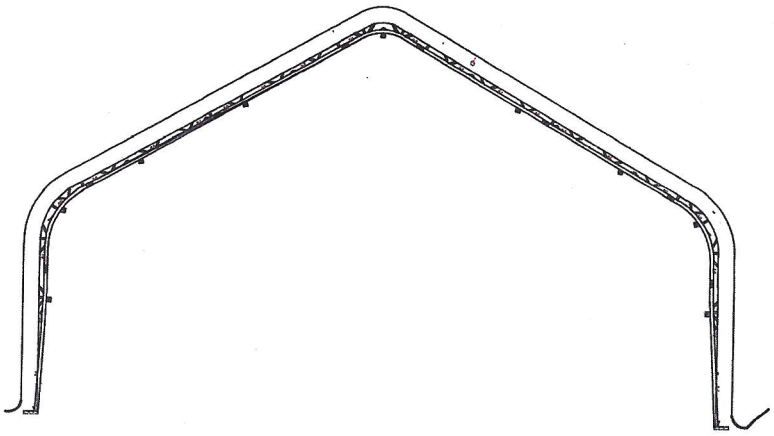

**FIGURE 10** INSTALLATION OF FRONT PANEL COVER

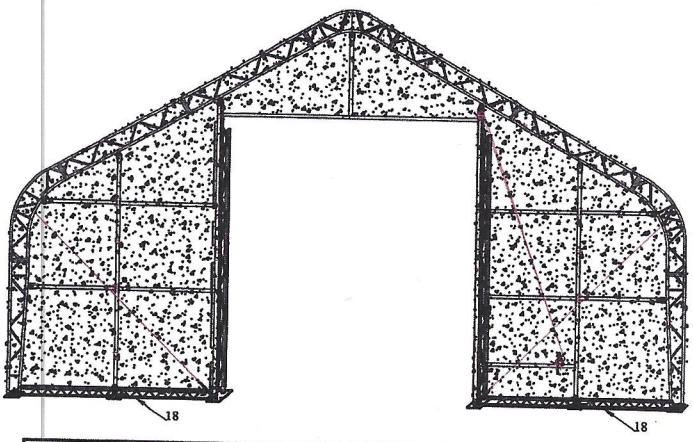


**FIGURE 11** FASTENING THE TWO ENDS OF THE ROOF COVER

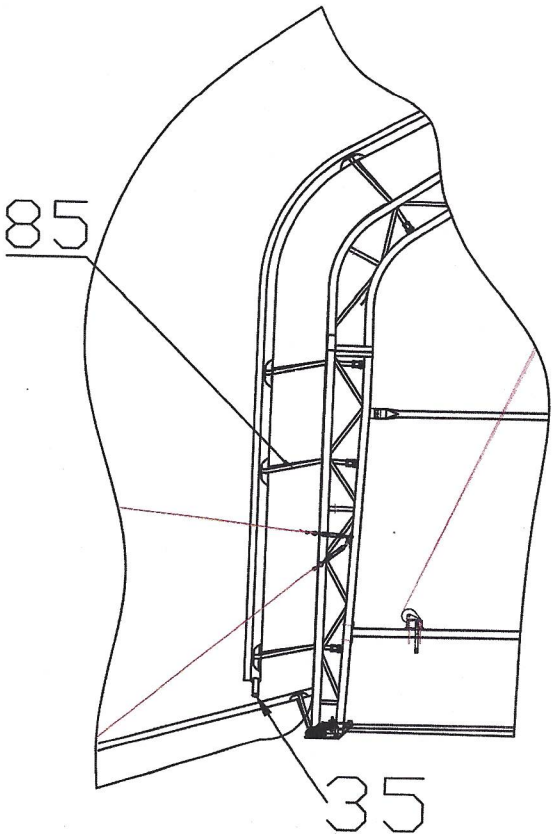




# STEP7 INSTALLING THE MECHANICAL DOOR

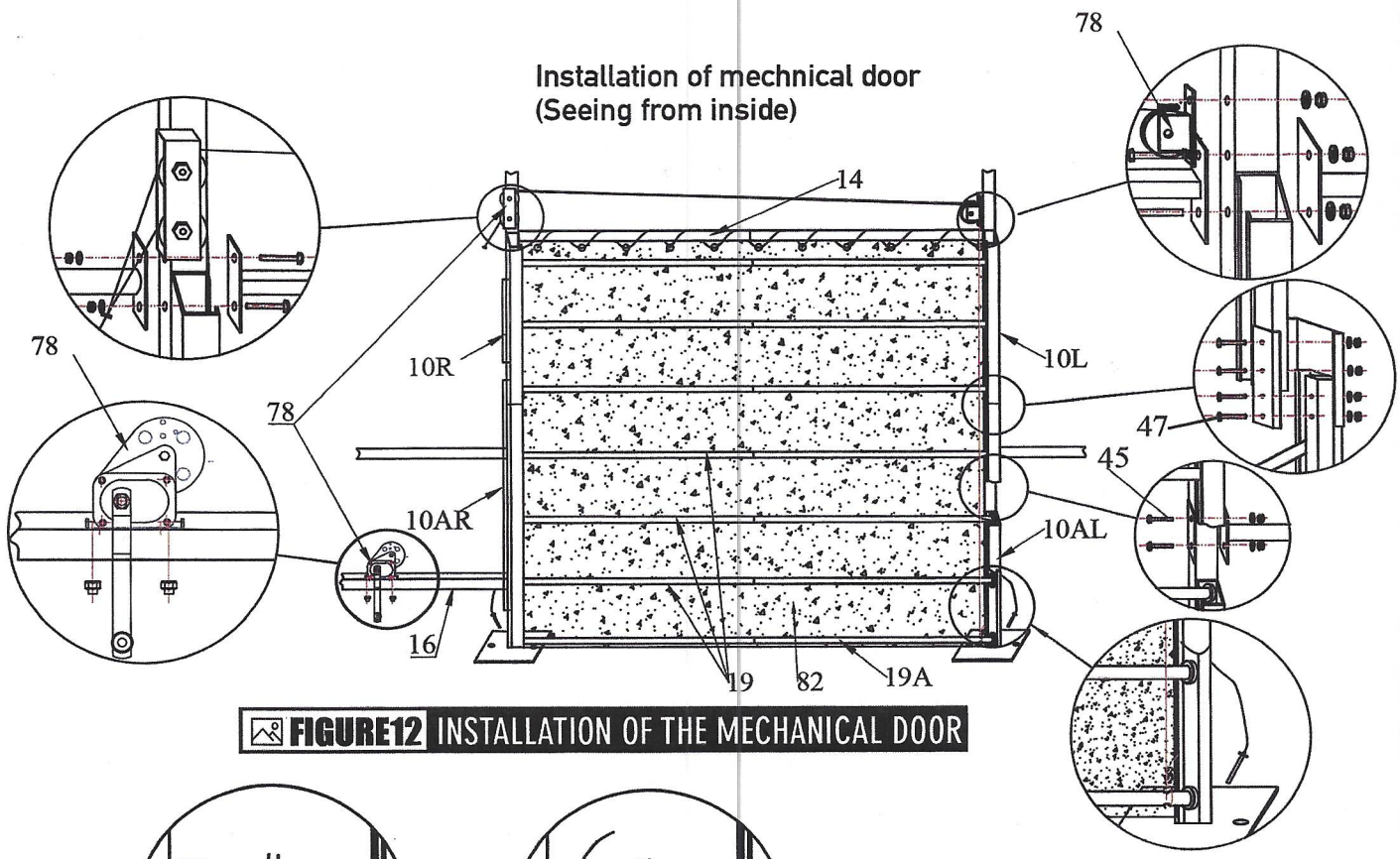


**FIGURE12** INSTALLATION OF THE MECHANICAL DOOR

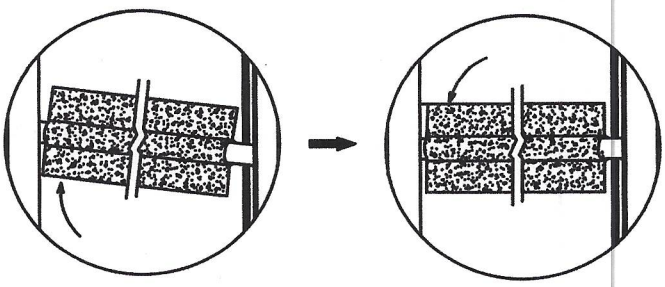

Door dropping tube assembly

1. Install the main door pulleys (left and right) over the top of the door on each side of the door beam(Part #14).
2. The winch mechanism should then be attached to the lower front panel beam (part # 16).
3. Insert the bottom door drop tube (part # 19A) into the bottom horizontal fabric pocket on the door cover (part # 82). Then, insert the remaining six door dropping tubes (part # 19) into the remaining horizontal fabric pockets in the door cover.
4. From the bottom of the door tracks (part # 10, 10A), gently raise and slide one door, dropping tube (part # 19) into the tracks. Then feed the remaining door-dropping tubes (part # 19, 19A) into the door tracks.
5. Install the steel wire from the door winching assembly to the bottom of the door-dropping tubes. Long and short steel cables are attached to the winch assembly. Feed the shorter of the two cables through the lower roller of the double pulley at the top of the door assembly track closest to the winch assembly and then down through the holes in the bottom door dropping tube (part # 19A) on the left side of the door (facing from the inside). Tie a knot in the steel cable after it has passed through the hole in the bottom door dropping tube (part # 19A) so that it cannot pass back up through the hole.
6. Route the leading end of the long steel cable from the winch assembly through the upper roller of the double pulley on the near door track and then through the single roller on the far door track. Then descend through the bottom door dropping tube (part # 19A). Tie a knot in the steel cable after it has passed through the bottom door dropping tube's hole (part # 19A). The winch assembly can now be used to open or close the door. To ensure the door tube ends are not stuck on the track, raise and lower the door several times. Lubricate if necessary.

# AFTER-SALES

## MAINTENANCE AND CARE

1. If some parts or the cover were accidentally damaged while in use, contact the local supplier for advice on the best repair method or replacements to prevent further damage and keep the building in good condition.

2. Ensure the entire frame and the parts connected to the replaced parts are securely fastened or supported when replacing the parts.

3. Pick a windless day to replace the cover, as you did when attaching it. Begin by ensuring that all bolts in the frame and the tensioning equipment are securely fastened. Ensure the associated ropes are removed before removing the cover and that the cover is not obstructed. With heavy, high-powered equipment, avoid pulling the cover.

4. Keep the building with the mechanical door closed if it hasn't been used in a while. This prolongs the life of the mechanical door.

5. Put small pieces of duct tape or foam rubber (provided by yourself) on the frame that comes into contact with the cover to extend the life of the cover. The tape and foam rubber act as a cushion to prevent rubbing damage to the cover over time.

6. The building should be inspected regularly (at least once every half year) and maintained internally and externally to ensure the building is adequately installed and secure. Check all bolts and hardware connectors to ensure they are in place and tightened, ensuring the base plates are still securely fastened, and checking and adjusting the ropes as needed. Clean the cover with suitable washing. Allowing dirt and debris to sit on the cover for an extended period will irreparably damage it.

---

**Thank you again for selecting this high-quality product.**