Genie
A TEREX BRAND

Operator's Manual

Serial Number Range

Z®-62/40
Z®-62/40 TRAX™

CE
UK
CA

with
Maintenance
Information

Original Instructions
Second Edition
Fourth Printing
Part No. 1304187GT

Manufacturer:

Terex Global GmbH
Bleicheplatz 2
Schaffhausen, 8200
Switzerland

EU Authorized representative:

Genie Industries B.V.
Boekerman 5
4751 XK OUD GASTEL
The Netherlands

UK Authorized representative:

Genie UK Limited
The Maltings
Wharf Road
Grantham
NG31 6BH
UK

Contents

Introduction 1
Symbol and Hazard Pictorials Definitions 5
General Safety 8
Personal Safety 11
Work Area Safety 12
Legend 22
Controls 23
Inspections 36
Operating Instructions 50
Towing Instructions 68
Transport and Lifting Instructions 69
Maintenance 72
Specifications 76

Copyright © 2014 Terex Corporation

Second Edition: Fourth Printing, November 2023

Genie and "Z" are registered trademarks of Terex South Dakota, Inc. in the U.S.A. and many other countries.

"TraX" is a trademark of Terex South Dakota, Inc.

CE Complies with EC Directive 2006/42/EC
See EC Declaration of Conformity

UKCA Supply of Machinery (Safety) Regulations 2008

Introduction

About this manual

Genie appreciates your choice of our machine for your application. Our number one priority is user safety, which is best achieved by our joint efforts. This book is an operation and daily maintenance manual for the user or operator of a Genie machine.

This manual should be considered a permanent part of your machine and should remain with the machine at all times. If you have any questions, contact Genie.

Product Identification

The machine serial number is located on the serial label.

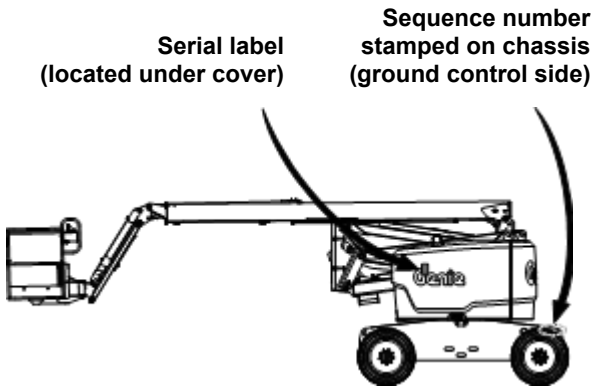

Intended Use and Familiarization Guide

The intended use of this machine is to lift personnel, including tools, and materials to an aerial work site. Before operating the machine, it's the operator's responsibility to read and understand this familiarization guide.

- ☑ Each person must be trained to operate a Mobile Elevating Work Platform (MEWP).
- ☑ Familiarization with the MEWP must be given to each person who is authorized, competent and trained.
- ☑ Only trained and authorized personnel should be permitted to operate the machine.
- ☑ The operator is responsible to read, understand, and obey the manufacturer's instructions and safety rules provided in the Operator's Manual.
- ☑ The Operator's Manual is located in the manual storage container, at the platform.
- ☑ For specific product applications, see **Contacting The Manufacturer**.

Introduction

Platform controls symbology and related machine movement:


Platform level swtich


Platform rotate switch


Jib boom up/down


Primary boom up/down


Turntable rotate


Primary boom extend/retract switch


Secondary boom up/down


Drive forward/reverse


Steer right/left

Ground controls symbology and related machine movement:

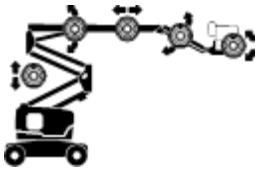
Platform level, jib boom up/down, primary boom extend/retract, primary boom up/down, and secondary boom retract/lower.

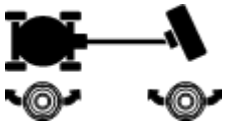
Turntable rotate and platform rotate

Sequential functions and movement:

- Drive and steer.

Interlocked functions:

- Elevated drive speed.
- Elevated drive in an off-level condition.
- Drive enable when the boom is rotated past the non-steer wheels.
- All platform and ground controls.

Limitations of use:

- The intended use of this machine is to lift personnel, including tools, and materials to an aerial work site.
- Do not elevate the platform unless the machine is on firm level ground.

Stability enhancing means:

- Foam filled tires (if equipped).

Introduction

Bulletin Distribution and Compliance

Safety of product users is of paramount importance to Genie. Various bulletins are used by Genie to communicate important safety and product information to dealers and machine owners.

The information contained in the bulletins is tied to specific machines using the machine model and serial number.

Distribution of bulletins is based on the most current owner on record along with their associated dealer, so it is important to register your machine and keep your contact information up to date.

To ensure safety of personnel and the reliable continued operation of your machine, be sure to comply with the action indicated in a respective bulletin.

To view any open bulletins for your machine, visit us on the web at www.genielift.com.

Contacting the Manufacturer

At times it may be necessary to contact Genie. When you do, be ready to supply the model number and serial number of your machine, along with your name and contact information. At minimum, Genie should be contacted for:

Accident reporting

Questions regarding product applications and safety

Standards and regulatory compliance information

Current owner updates, such as changes in machine ownership or changes in your contact information. See Transfer of Ownership, below.

Transfer of Machine Ownership

Taking a few minutes to update owner information will ensure that you receive important safety, maintenance and operating information that applies to your machine.

Please register your machine by visiting us on the web at www.genielift.com or by calling us toll free at 1-800-536-1800.

Introduction



Danger

Failure to obey the instructions and safety rules in this manual will result in death or serious injury.

Do Not Operate Unless:

☑ You learn and practice the principles of safe machine operation contained in this operator's manual.

1 Avoid hazardous situations.

Know and understand the safety rules before going on to the next section.

2 Always perform a pre-operation inspection.

3 Always perform function tests prior to use.

4 Inspect the workplace.

5 Only use the machine as it was intended.

☑ You read, understand and obey the manufacturer's instructions and safety rules—safety and operator's manuals and machine decals.

☑ You read, understand and obey employer's safety rules and worksite regulations.

☑ You read, understand and obey all applicable governmental regulations.

☑ You are properly trained to safely operate the machine.

Safety Sign Maintenance

Replace any missing or damaged safety signs. Keep operator safety in mind at all times. Use mild soap and water to clean safety signs. Do not use solvent-based cleaners because they may damage the safety sign material.

Hazard Classification

Decals on this machine use symbols, color coding, and signal words to identify the following:



Safety alert symbol—used to alert you to potential personal injury hazards. Obey all safety messages that follow this symbol to avoid possible injury or death.

⚠ DANGER Indicates a hazardous situation which, if not avoided, will result in death or serious injury.

⚠ WARNING Indicates a hazardous situation which, if not avoided, could result in death or serious injury.

⚠ CAUTION Indicates a hazardous situation which, if not avoided, could result in minor or moderate injury.

NOTICE Indicates a property damage message.

Symbol and Hazard Pictorials Definitions

 Fire hazard	 Explosion hazard	 Explosion hazard	 Do not use ether or other high energy starting aids on machines equipped with glow plugs.	 No smoking. No flame. Stop engine.
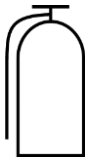 Fire extinguisher	 No smoking	 Explosion hazard	 Electrocution hazard	 Maintain required clearance
 Tip-over hazard	 Tip-over hazard	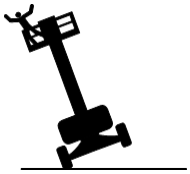 Tip-over hazard	 Tip-over hazard	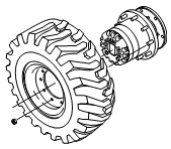 Tire specifications
 Wheel load	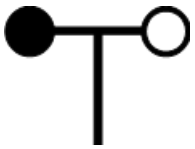 Wind speed	 Maximum capacity	 Manual force	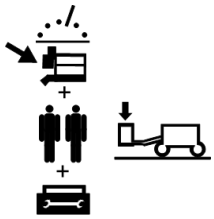 Weight of welder reduces capacity

Symbol and Hazard Pictorials Definitions

 Tie-down point	 Lifting point	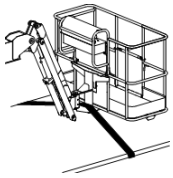 Platform tie-down instructions	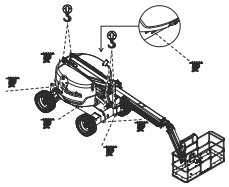 Lifting and tie down instructions	 Lanyard anchorage points
 Corrosive acid.	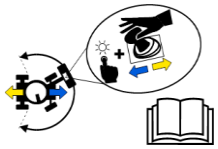 Color coded direction arrows	 Runaway hazard	 Collision hazard	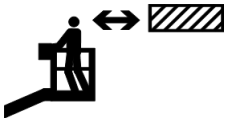 Overhead obstruction
 Electrocution hazard	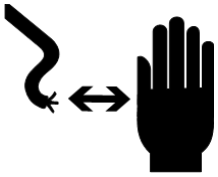 Avoid contact	 Disconnect battery	 Voltage rating for power to platform	 Pressure rating for air line to platform

Symbol and Hazard Pictorials Definitions

<table>
<tr>
<td colspan="2">Recovery procedure if tilt alarm sounds while elevated.
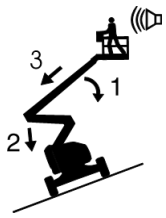

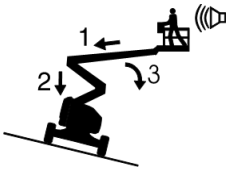

Platform uphill:
1 Lower primary.
2 Lower secondary.
3 Retract primary.
Platform downhill:
1 Retract primary.
2 Lower secondary.
3 Lower primary.</td>
<td>
Read the operator’s manual</td>
<td>
Read the service manual</td>
<td>
Access by trained and authorized personnel only</td>
</tr>
<tr>
<td>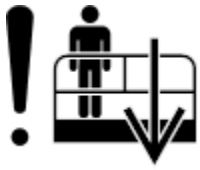
Auxiliary lowering</td>
<td>
Crush hazard</td>
<td>
Support the platform or boom during maintenance</td>
<td>
Replace tracks with same tracks.</td>
<td>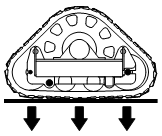
Wheel load</td>
</tr>
<tr>
<td>

Platform overloaded</td>
</tr>
</table>

General Safety

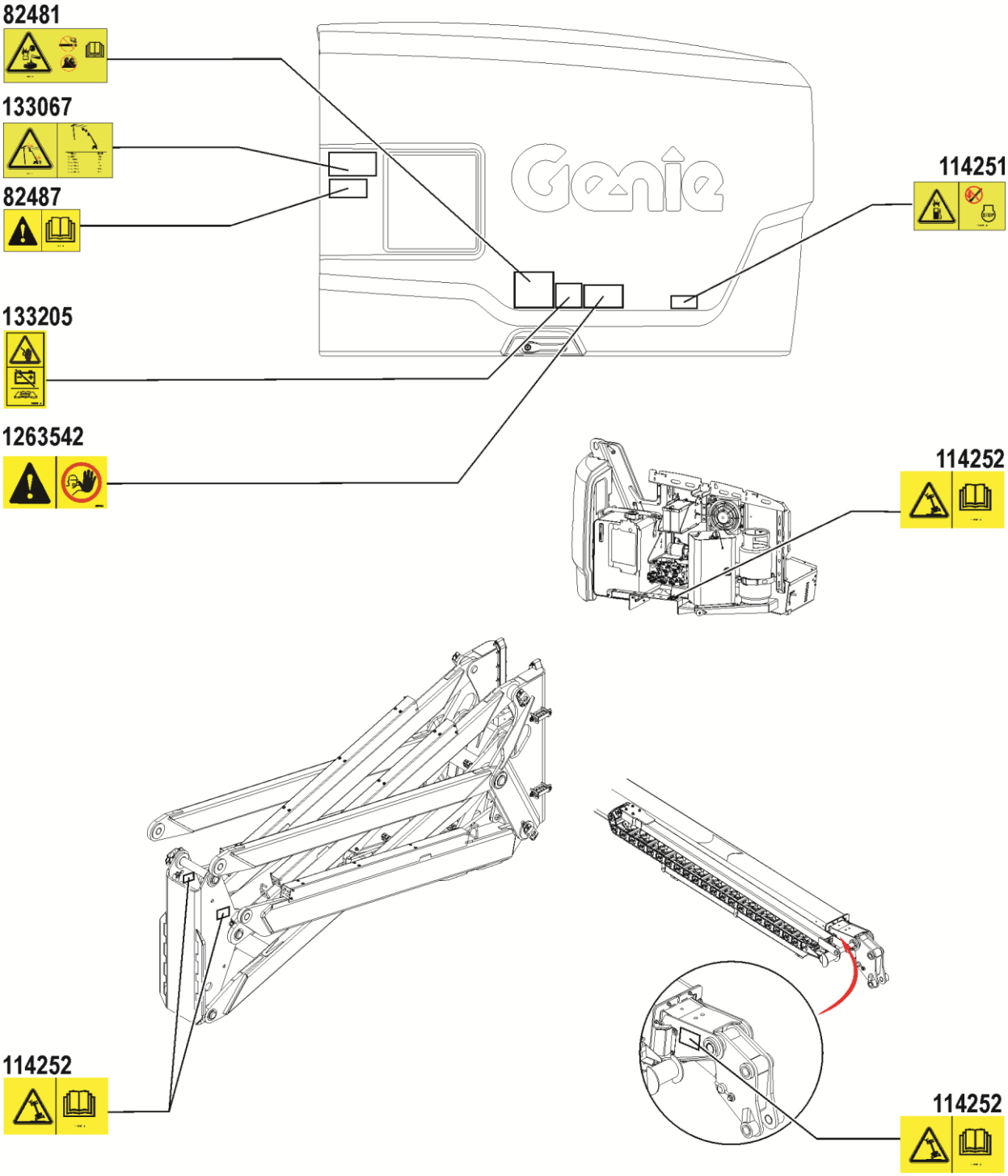

General Safety

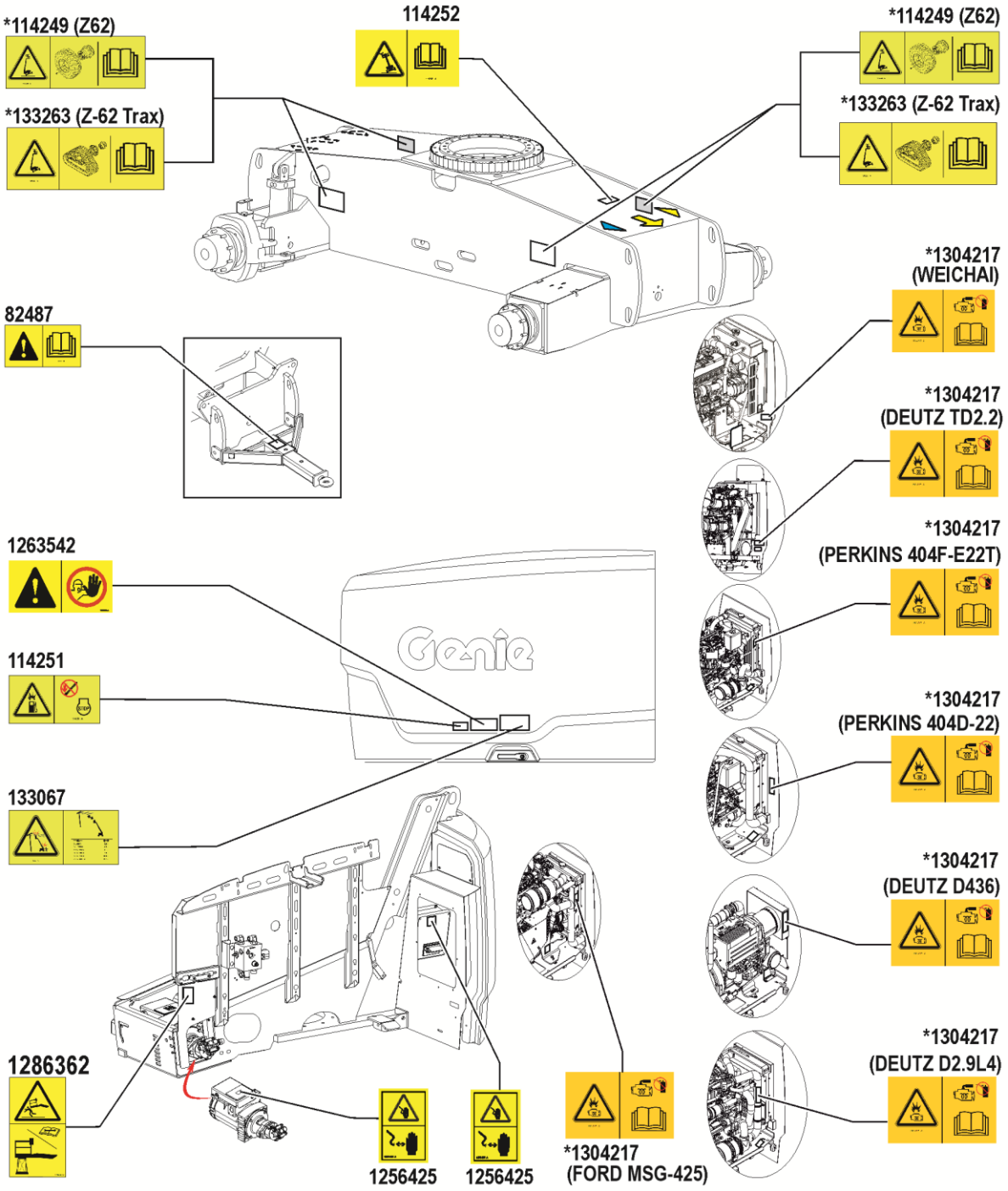

General Safety

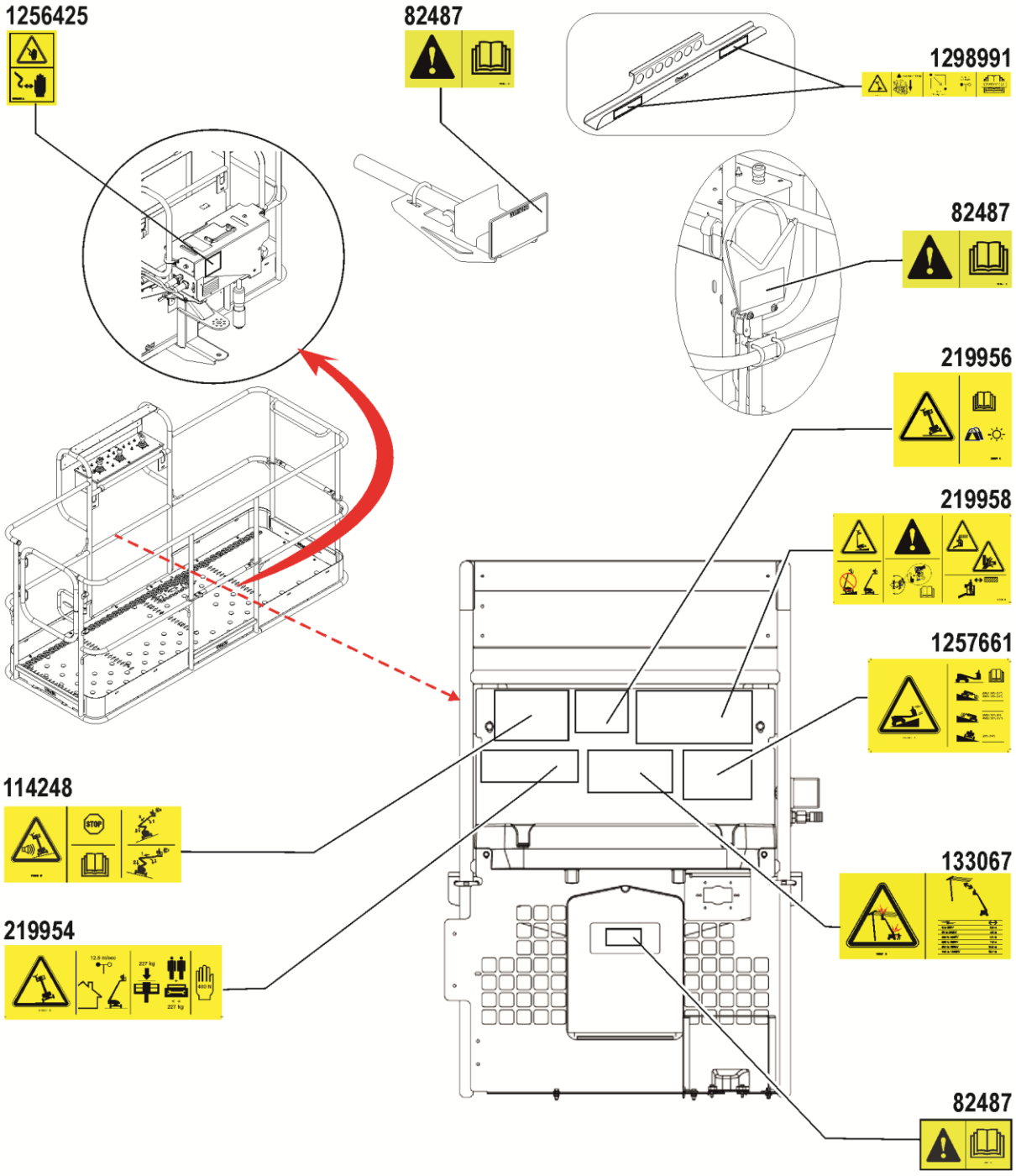

Personal Fall Protection

Personal fall protection equipment (PFPE) is required when operating this machine.

Occupants must wear a safety belt or harness in accordance with governmental regulations. Attach the lanyard to the anchor provided in the platform.

Operators must comply with employer, job site and governmental rules regarding the use of personal protective equipment.

All PFPE must comply with applicable governmental regulations, and must be inspected and used in accordance with the PFPE manufacturer's instructions.

Work Area Safety

Pictures in this manual may show a boom with tires and wheels instead of tracks. All safety information and operating instructions still apply to the Z-62/40 TRAX, even if the picture does not show the tracks.

⚠ Electrocution Hazards

This machine is not electrically insulated and will not provide protection from contact with or proximity to electrical current.



Obey all local and governmental regulations regarding required clearance from electrical power lines. At a minimum, the required clearance contained in the chart below must be followed.

Line Voltage	Required Clearance	
0 to 50KV	10 ft	3.05 m
50 to 200KV	15 ft	4.60 m
200 to 350KV	20 ft	6.10 m
350 to 500KV	25 ft	7.62 m
500 to 750KV	35 ft	10.67 m
750 to 1000KV	45 ft	13.72 m

Allow for platform movement, electrical line sway or sag, and beware of strong or gusty winds.



Keep away from the machine if it contacts energized power lines. Personnel on the ground or in the platform must not touch or operate the machine until energized power lines are shut off.

Do not operate the machine during lightning or storms.

Do not use the machine as a ground for welding.

⚠ Tip-over Hazards

Occupants, equipment and materials shall not exceed the maximum platform capacity or the maximum platform capacity of the platform extension.

Maximum platform capacity	500 lbs	227 kg
Maximum occupants		2

The weight of options and accessories, such as pipe cradles, panel cradles and welders, will reduce the rated platform capacity and must be subtracted from the platform capacity. See the decals with the options and accessories.

If using accessories, read, understand and obey the decals, instructions and manuals with the accessory.

Work Area Safety





Do not raise or extend the boom unless the machine is on a firm, level surface.

Do not depend on the tilt alarm as a level indicator. The tilt alarm sounds in the platform only when the machine is on a severe slope.

If the tilt alarm sounds while the boom is lowered: Do not extend, rotate or raise the boom above horizontal. Move the machine to a firm, level surface before raising the platform.

If the tilt alarm sounds when the platform is raised, use extreme caution. Identify the condition of the boom on the slope as shown in the tilt alarm procedure. Follow the steps to lower the boom before moving to a firm, level surface. Do not rotate the boom while lowering.

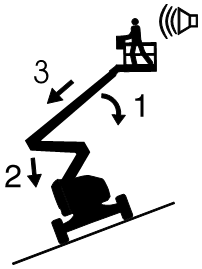

If the tilt alarm sounds with the platform uphill:

1 Lower the primary boom.

2 Lower the secondary boom.

3 Retract the primary boom.

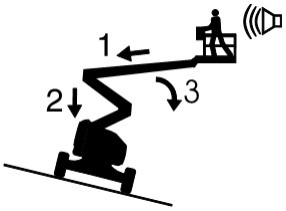

If the tilt alarm sounds with the platform downhill:

1 Retract the primary boom.

2 Lower the secondary boom.

3 Lower the primary boom.



Do not raise the boom when wind speeds may exceed 28 mph/12.5 m/s. If wind speeds exceed 28 mph/12.5 m/s when the boom is raised, lower the boom and do not continue to operate the machine.

Do not operate the machine in strong or gusty winds. Do not increase the surface area of the platform or the load. Increasing the area exposed to the wind will decrease machine stability.

Work Area Safety



Use extreme care and slow speeds while driving the machine in the stowed position across uneven terrain, debris, unstable or slippery surfaces and near holes and drop-offs.

Do not drive the machine on or near uneven terrain, unstable surfaces or other hazardous conditions with the boom raised or extended.

Do not use the machine as a crane.

Do not push the machine or other objects with the boom.

Do not contact adjacent structures with the boom.

Do not tie the boom or platform to adjacent structures.

Do not place loads outside the platform perimeter.



Do not push off or pull toward any object outside of the platform.

Maximum allowable manual force:
90 lbs / 400 N

Do not alter or disable machine components that in any way affect safety and stability.

Do not replace items critical to machine stability with items of different weight or specification.

Do not replace tracks with tires.

Do not use the platform controls to free a platform that is caught, snagged, or otherwise prevented from normal motion by an adjacent structure. All personnel must be removed from the platform before attempting to free the platform using the ground controls.

Do not modify or alter a mobile elevating work platform without prior written permission from the manufacturer. Mounting attachments for holding tools or other materials onto the platform, toeboards, or guard rail system can increase the weight in the platform and the surface area of the platform or the load.

Work Area Safety



Do not place or attach fixed or overhanging loads to any part of this machine.



Do not place ladders or scaffolds in the platform or against any part of this machine.

Do not transport tools and materials unless they are evenly distributed and can be safely handled by person(s) in the platform.

Do not use the machine on a moving or mobile surface or vehicle.

Be sure all track lug nuts are properly tightened.

⚠ Operation on Slopes Hazards

Do not drive the machine on a slope that exceeds the maximum uphill, downhill or side slope rating of the machine. Slope rating applies only to machines in the stowed position.

Maximum slope rating, stowed position, 2WD		
Platform downhill	30%	(17°)
Platform uphill	10%	(6°)
Side slope	25%	(14°)
Maximum slope rating, stowed position, 4WD		
Platform downhill	45%	(24°)
Platform uphill	30%	(17°)
Side slope	25%	(14°)

Note: Slope rating is subject to ground conditions with one person in the platform and adequate traction. Additional platform weight may reduce slope rating. See Driving on a Slope in the Operating Instructions section.

Work Area Safety

⚠ Fall Hazards

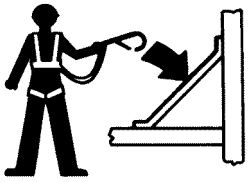

Occupants must wear a safety belt or harness in accordance with governmental regulations. Attach the lanyard to the anchor provided in the platform.



Do not sit, stand, or climb on the platform guard rails. Maintain a firm footing on the platform floor at all times.



Do not climb down from the platform when raised.

Keep the platform floor clear of debris.

Lower the platform entry mid-rail or close the entry gate before operating.

Do not enter or exit the platform unless the machine is in the stowed position and the platform is at ground level.

Hazards related with the specific product application of exiting at height have been considered in the design of the machine, for further information contact Genie (see section Contacting the Manufacturer).

⚠ Collision Hazards

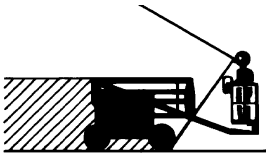

Be aware of limited sight distance and blind spots when driving or operating.

Be aware of the boom position and tailswing when rotating the turntable.



Check the work area for overhead obstructions or other possible hazards.



Be aware of crushing hazards when grasping the platform guard rail.

Operators must comply with employer, job site, and governmental rules regarding use of personal protective equipment.

Work Area Safety

Observe and use the color-coded direction arrows on the platform controls and drive chassis for drive and steer functions.

Stay clear of all Trax rotating or moving parts such as sprockets and rollers.



Do not lower the boom unless the area below is clear of personnel and obstructions.



Limit travel speed according to the condition of the ground surface, congestion, slope, location of personnel, and any other factors which may cause collision.

Do not operate a boom in the path of any crane unless the controls of the crane have been locked out and/or precautions have been taken to prevent any potential collision.

No stunt driving or horseplay while operating a machine.

⚠ Bodily Injury Hazard

Do not operate the machine with a hydraulic oil or air leak. An air leak or hydraulic leak can penetrate and/or burn skin.

Always operate the machine in a well-ventilated area to avoid carbon monoxide poisoning.

Do not allow any object to come near moving parts. The object could be thrown out of the Trax undercarriage.

Improper contact with components under any cover will cause serious injury. Only trained maintenance personnel should access compartments. Access by the operator is only advised when performing a pre-operation inspection. All compartments must remain closed and secured during operation.

⚠ Explosion and Fire Hazards

Do not start the engine if you smell or detect liquid petroleum gas (LPG), gasoline, diesel fuel or other explosive substances.

Do not refuel the machine with the engine running.

Refuel the machine and charge the battery only in an open, well-ventilated area away from sparks, flames and lighted tobacco.

Do not operate the machine or charge the battery in hazardous locations or locations where potentially flammable or explosive gases or particles may be present.

Do not spray ether into engines equipped with glow plugs.

Work Area Safety

⚠ Damaged Machine Hazards

Do not use a damaged or malfunctioning machine.

Conduct a thorough pre-operation inspection of the machine and test all functions before each work shift. Immediately tag and remove from service a damaged or malfunctioning machine.

Be sure all maintenance has been performed as specified in this manual and the appropriate Genie service manual.

Be sure all decals are in place and legible.

Be sure the operator's manual is complete, legible, and in the storage container located on the machine.

⚠ Component Damage Hazards

Do not use any battery or charger greater than 12V to jump-start the engine.

Do not use the machine as a ground for welding.

Do not operate the machine in locations where extremely high magnetic fields may be present.

⚠ Battery Safety

Burn Hazards



Batteries contain acid. Always wear protective clothing and eye wear when working with batteries.

Avoid spilling or contacting battery acid. Neutralize battery acid spills with baking soda and water.

Explosion Hazards



Keep sparks, flames, and lighted tobacco away from batteries. Batteries emit explosive gas.





⚠ Electrocution Hazard

Avoid contact with electrical terminals.

Work Area Safety

⚠ Panel Cradle Safety

Read, understand and obey all warnings and instructions provided with the panel cradles.

Do not exceed the rated platform capacity. The combined weight of the cradles, panels, occupants, tools and any other equipment must not exceed rated capacity.

The panel cradle assembly weighs 30 lbs/13.6 kg.

The maximum capacity of the panel cradles is 250 lbs/113 kg.

The weight of the panel cradles and the load in the panel cradles may limit the maximum number of occupants in platform to one person.

Secure the cradles to the platform. Secure the panel (s) to the platform railing using the straps provided.

Do not operate unless you are adequately instructed and are aware of all hazards associated with lifting panels.

Do not cause a horizontal force or side load to machine by raising or lowering a fixed or overhanging load.

Maximum vertical height of panels: 4 ft/1.2 m.

Maximum wind speed: 15 mph/6.7 m/sec.

Maximum panel area: 32 sq ft/3 m^2.

⚠ Pipe Cradle Safety

Read, understand, and obey all warnings and instructions provided with the pipe cradles.

Do not exceed the rated platform capacity. The pipe cradle assembly and the weight in the pipe cradles will reduce rated platform capacity and must be factored into total platform load.

The pipe cradle assembly weighs 21 lbs/9.5 kg.

The maximum capacity of the pipe cradle assembly is 200 lbs/91 kg.

The weight of the pipe cradle assembly and the load in the pipe cradles may limit the maximum number of occupants in platform.

Center the load within the perimeter of the platform.

Secure the load to the platform.

Do not obstruct the entrance or the exit of the platform.

Do not obstruct the ability to operate the platform controls or the red Emergency Stop button.

Do not operate unless you are adequately instructed and are aware of all of the hazards associated with movement of the platform with an overhanging load.

Do not cause a horizontal force or side load to machine by raising or lowering a fixed or overhanging load.

Electrocution Hazard: Keep pipes away from all energized electrical conductors.

Work Area Safety

⚠ Welder Safety

Read, understand and obey all warnings and instructions provided with the welding power unit.

Do not connect weld leads or cables unless the welding power unit is turned off at the platform controls.

Do not operate unless the weld cables are properly connected and the welder is properly grounded.

The weight of the welder will reduce the rated platform capacity and must be factored into the total platform load. The welder power supply weighs 75 lbs/34 kg.

Do not operate the welder unless a fire extinguisher is immediately available for instant use.

Tow Package Safety

Read, understand and obey all warnings and instructions provided with the tow package.

When vehicle is in free-wheel configuration, there are no brakes and machine may move, resulting in death, serious injury or property damage.

Do not exceed maximum towing speed, or maximum towing time.

Maximum tow speed	8 mph/13 km/h
Maximum towing time at 8 mph/13 km/h	30 minutes
Maximum towing time at 6 mph/10 km/h	60 minutes

Lockout After Each Use

1 Select a safe parking location—firm level surface, clear of obstruction and traffic.

2 Retract and lower the boom to the stowed position.

3 Rotate the turntable so that the boom is between the non-steer wheels.

4 Turn the key switch to the off position and remove the key to secure from unauthorized use.

Legend

Pictures in this manual may show a boom with tires and wheels instead of tracks. All safety information and operating instructions still apply to the Z-62/40 TRAX, even if the picture does not show the tracks.

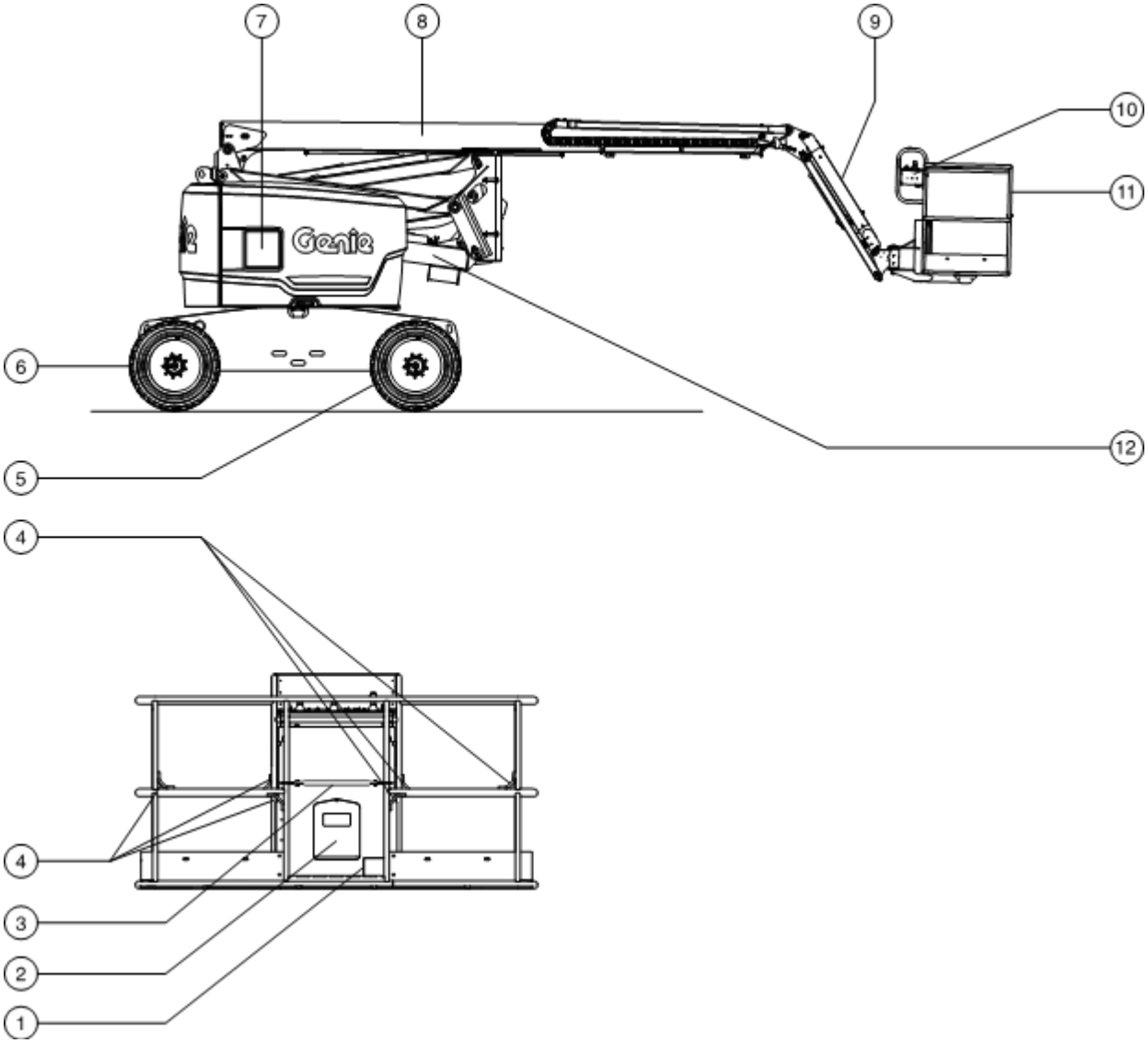

1 Foot switch
2 Manual storage container
3 Sliding mid-rail
4 Lanyard anchorage points
5 Non-steer tire
6 Steer tire
7 Ground controls
8 Primary boom
9 Jib boom
10 Platform controls
11 Platform
12 Secondary boom

Controls

The Z-62/40 machine will have one of these two styles of ground control panels. It will have either an LCD screen, shown in the top view, or an hour meter, shown in the bottom view. The descriptions in this section and the instructions in the Function Test and Operating Instructions apply to both panels, unless specifically noted.

The ground control station is to be used as a means to raise the platform for storage purposes and for function tests. The ground control station can be used in the event of an emergency to rescue an incapacitated person in the platform. When the ground control station is selected, the platform controls are inoperable, including the E-stop switch.

Ground Control Panel With LCD Display

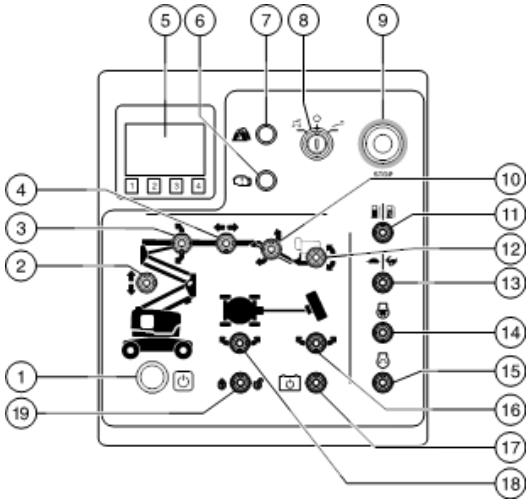

Ground Control Panel With Hour Meter

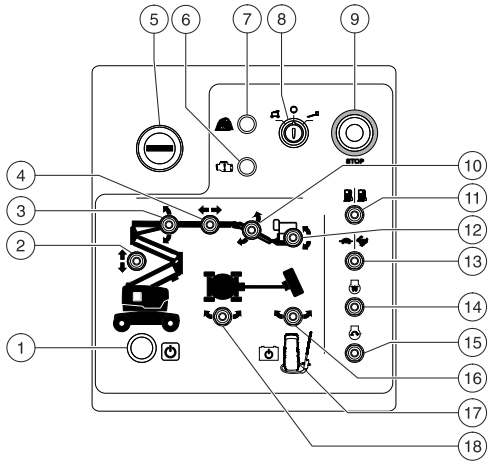

Controls

Ground Control Panel

1 Function enable button

Press and hold the function enable button to enable the functions on the ground control panel to operate.

2 Secondary boom up/down switch

Move the secondary boom up/down switch up and the secondary boom will raise. Move secondary boom up/down switch down and the secondary boom will lower.

3 Primary boom up/down switch

Move the primary boom up/down switch up and the boom will raise. Move the primary boom up/down switch down and the boom will lower.

4 Primary boom extend/retract switch

Move the primary boom extend/retract switch to the right and the primary boom will extend. Move the boom extend/retract switch to the left and the primary boom will retract.

5 LCD readout screen

Screen displays hour meter, voltage, oil pressure and coolant temperature. Screen also displays fault codes and other service information.

or

Hour meter

The hour meter displays the number of hours the machine has operated.

6 Gasoline/LPG models: Check engine light
Diesel models: Oil pressure light

Light on and engine stopped: Tag the machine and remove from service.
Light on and engine still running: Contact service personnel within 24 hours.

7 Platform overload indicator light

Light flashing indicates the platform is overloaded. The engine will stop and no functions will operate. Remove weight until the light goes off and then restart the engine.

8 Key switch for ground selection/off/platform

Turn the key switch to the ground position and the ground controls will operate. Turn the key switch to the off position and the machine will be off. Turn the key switch to the platform position and the platform controls will operate.

9 Red Emergency Stop button

Push in the red Emergency Stop button to the off position to stop all functions and turn the engine off. Pull out the red Emergency Stop button to the on position to operate the machine.

10 Jib boom up/down switch

Move the jib boom switch up and the jib boom will raise. Move the jib boom switch down and the jib boom will lower.

Controls

11 Gasoline/LPG models: Fuel select switch

Move the fuel select switch to the gasoline position to select gasoline. Move the fuel select switch to the LPG position to select LPG.

12 Platform level switch

Move the platform level switch up and the level of the platform will raise. Move the platform level switch down and the level of the platform will lower.

13 Engine idle (rpm) select switch

Move the engine idle select switch to the turtle position for low idle.
Move the engine idle select switch to the rabbit position for high idle.

14 Diesel models: Glow plug switch (if equipped)

Move the glow plug switch to either side and hold for 3 to 5 seconds.

15 Engine start switch

Move the engine start switch to either side to start the engine.

16 Platform rotate switch

Move the platform rotate switch to the right and the platform will rotate to the right. Move the platform rotate switch to the left and the platform will rotate to the left.

17 Auxiliary power switch

Use auxiliary power if the primary power source (engine) fails.
Simultaneously hold the auxiliary power switch to either side and activate the desired function.

or

Auxiliary power switch with cover

Use auxiliary power if the primary power source (engine) fails.
Simultaneously hold the auxiliary power switch to either side and activate the desired function.

18 Turntable rotate switch

Move the turntable rotate switch to the right and the turntable will rotate to the right. Move the turntable rotate switch to the left and the turntable will rotate to the left.

19 Regeneration Enable switch (models with LCD screen)

Move the Regeneration Enable switch to the right to enable all the machine functions. Move the Regeneration Enable switch to the left to disable all the machine functions.

Controls

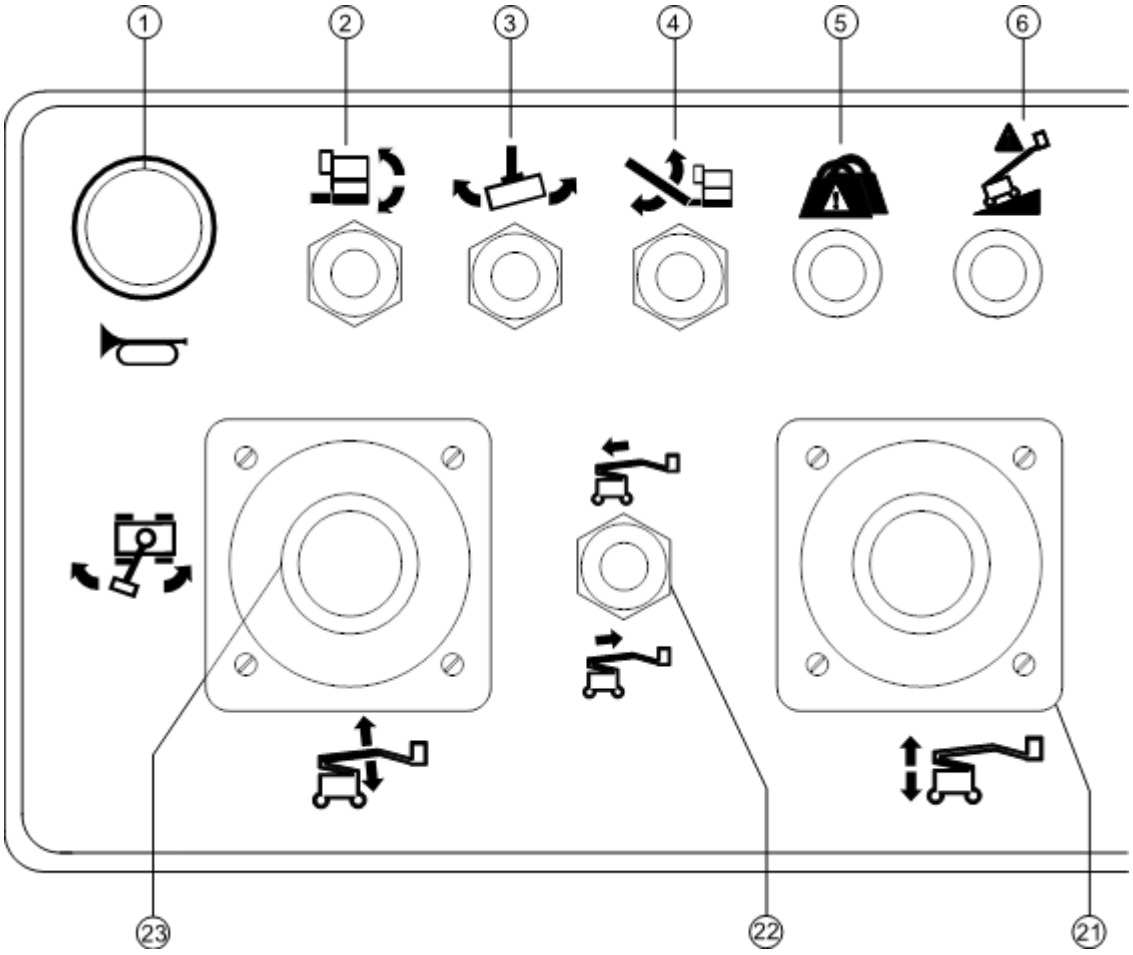

Platform Control Panel With Hour Meter

1 Horn button
2 Platform level switch
3 Platform rotate switch
4 Jib boom up/down switch
5 Platform overload indicator light
6 Machine not level indicator light
7 Auxiliary power switch with cover
8 Drive speed select switch
9 Platform control box heater (if equipped)
10 Generator switch (if equipped)
11 Aircraft protection override switch (if equipped)
12 Steer mode select switch (if equipped)
13 Red Emergency Stop button
14 Dual axis proportional control handle for drive and steer functions.
OR
Proportional control handle for drive function and thumb rocker for steer function

Controls

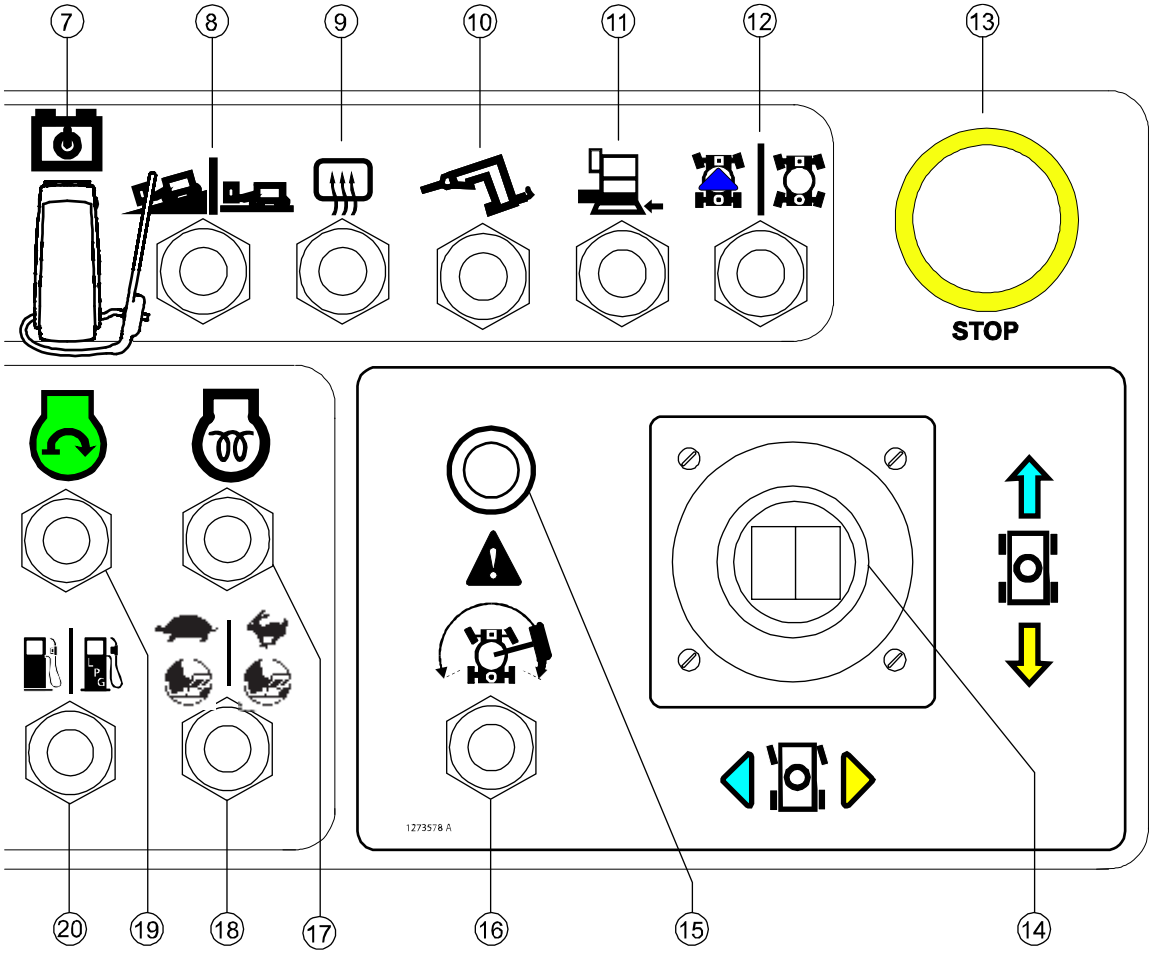

15 Drive enable indicator light
16 Drive enable switch
17 Diesel models:Glow plug switch
18 Engine idle (rpm) select switch
Turtle: foot switch activated low idle
Rabbit: foot switch activated high idle
19 Engine start switch
20 Gasoline/LPG models: Fuel select switch
21 Proportional control handle for secondary boom up/down function
22 Primary boom extend/retract switch
23 Dual axis proportional control handle for primary boom up/down and turntable rotate left/right functions

Controls

Platform Control Panel, Models With Hour Meter

1 Horn button

Press this button and the horn will sound. Release the button and the horn will stop.

2 Platform level switch



Move the platform level switch up and the level of the platform will raise. Move the platform level switch down and the level of the platform will lower.

3 Platform rotate switch



Move the platform rotate switch to the right and the platform will rotate to the right. Move the platform rotate switch to the left and the platform will rotate to the left.

4 Jib boom up/down switch



Move the jib boom switch up and the jib boom will raise. Move the jib boom switch down and the jib boom will lower.

5 Platform overload indicator light

Light flashing indicates the platform is overloaded. The engine will stop and no functions will operate. Remove weight until the light goes off and then restart the engine.

6 Machine not level indicator light

The machine not level indicator light will come on when the tilt alarm sounds.

7 Auxiliary power switch with cover

Use auxiliary power if the primary power source (engine) fails.
Simultaneously hold the auxiliary power switch to either side and activate the desired function.

or

Auxiliary power switch

Use auxiliary power if the primary power source (engine) fails.
Simultaneously hold the auxiliary power switch to either side and activate the desired function.

8 Drive speed select switch

Machine on incline symbol: Low range operation for inclines.
Machine on level surface symbol: High range operation for maximum drive speed.

9 Platform control box heater (if equipped)

Move the heater switch up to turn on the platform control box heater. Move the heater switch down to turn off the platform control box heater.

10 Generator switch (if equipped)

Move the generator switch up to activate the generator. Move the switch down to turn off the generator.

11 Aircraft protection override switch (if equipped)

Move and hold the aircraft protection override switch to operate the machine when the platform bumper is against an object.

12 Steer mode select switch (if equipped)

Move the steer mode select switch to the left to select square-end steer. Move the steer mode select switch to the right to select coordinated steer.

13 Red Emergency Stop button

Push in the red Emergency Stop button to the off position to stop all functions and turn the engine off. Pull out the red Emergency Stop button to the on position to operate the machine.

14 Dual axis proportional control handle for drive and steer functions.
OR
Proportional control handle for drive function and thumb rocker for steer function.

Move the control handle in the direction indicated by the blue arrow on the control panel and the machine will drive forward. Move the control handle in the direction indicated by the yellow arrow and the machine will drive backwards. Move the control handle in the direction indicated by the blue triangle and the machine will steer to the left. Move the control handle in the direction indicated by the yellow triangle and the machine will steer to the right.
OR
Move the control handle in the direction indicated by the blue arrow on the control panel and the machine will drive forward. Move the control handle in the direction indicated by the yellow arrow and the machine will drive backwards. Press the left side of the thumb rocker and the machine will steer to the left. Press the right side of the thumb rocker and the machine will steer to the right.

15 Drive enable indicator light

Light on indicates that the boom has moved just past either non-steer wheel and drive function has been interrupted.

16 Drive enable switch

To drive when the drive enable light is on, hold the drive enable switch to either side and slowly move the drive control handle off center. Be aware that the machine may move in the opposite direction that the drive and steer controls are moved.

17 Diesel models: Glow plug switch

Move the glow plug switch to either side and hold for 3 to 5 seconds.

18 Engine idle (rpm) select switch

Move the engine idle select switch to the turtle position for foot switch activated low idle. Move the engine idle select switch to the rabbit position for foot switch activated high idle.

19 Engine start switch

Move the engine start switch to either side to start the engine.

20 Gasoline/LPG models: Fuel select switch

Move the fuel select switch to the gasoline position to select gasoline. Move the fuel select switch to the LPG position to select LPG.

Controls

21 Proportional control handle for secondary boom up/down function

Move the control handle up and the secondary boom will raise. Move the control handle down and the secondary boom will lower.



22 Primary boom extend/retract switch

Move the primary boom extend/retract switch up and the primary boom will retract. Move the boom extend/retract switch down and the primary boom will extend.



23 Dual axis proportional control handle for primary boom up/down and turntable rotate left/right functions

Move the control handle up and the primary boom will raise. Move the control handle down and the primary boom will lower.



Move the control handle to the right and the turntable will rotate to the right. Move the control handle to the left and the turntable will rotate to the left.



Controls

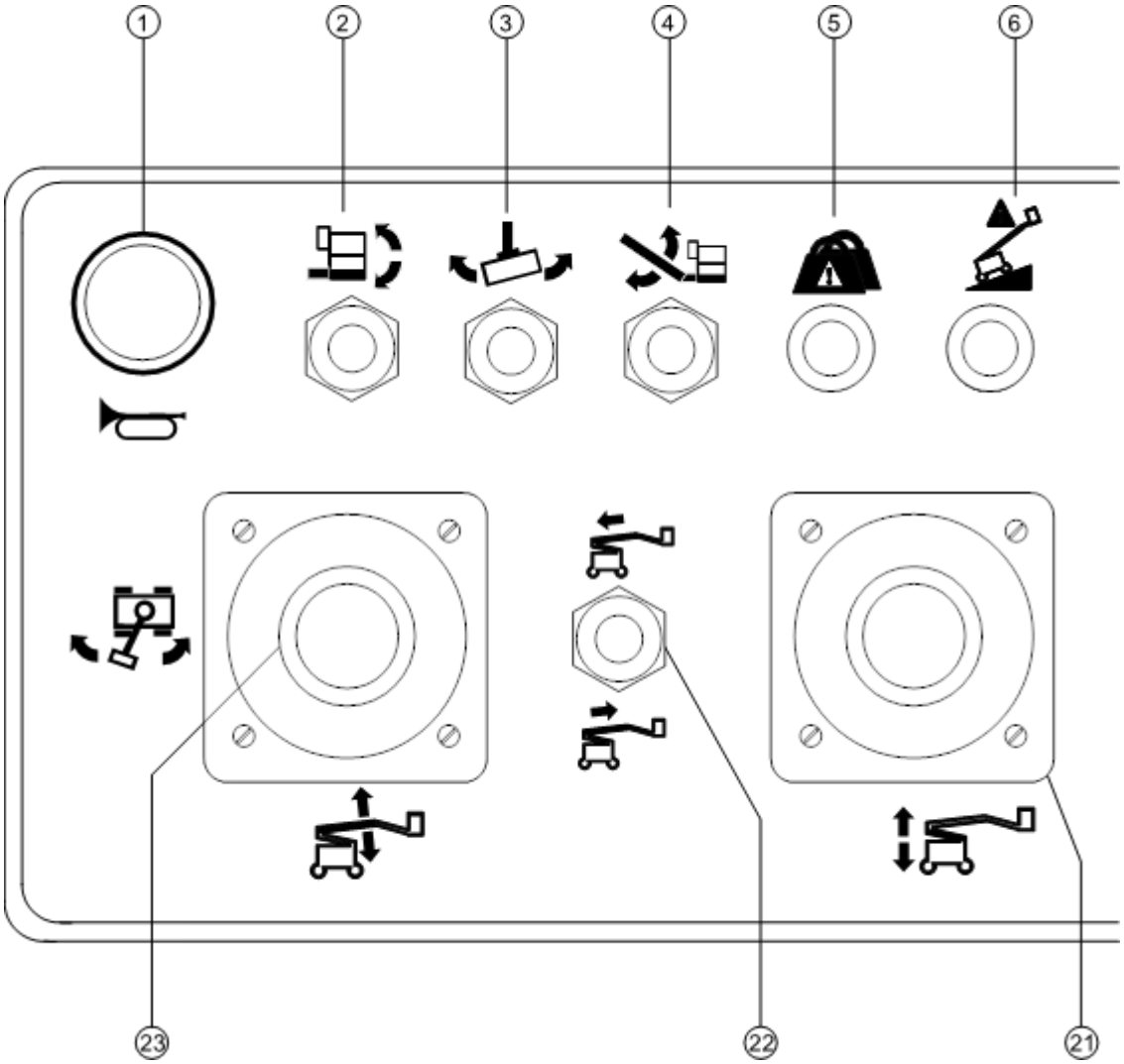

Platform Control Panel With LCD Display

1 Horn button
2 Platform level switch
3 Platform rotate switch
4 Jib boom up/down switch
5 Platform overload indicator light
6 Machine not level indicator light
7 Auxiliary power switch
8 Drive speed select switch
9 Platform control box heater (if equipped)
10 Generator switch (if equipped)
11 Aircraft protection override switch (if equipped)
12 Red Emergency Stop button
13 Dual axis proportional control handle for boom up/down and turntable rotate left/right functions OR Proportional control handle for drive function and thumb rocker for steer function

Controls

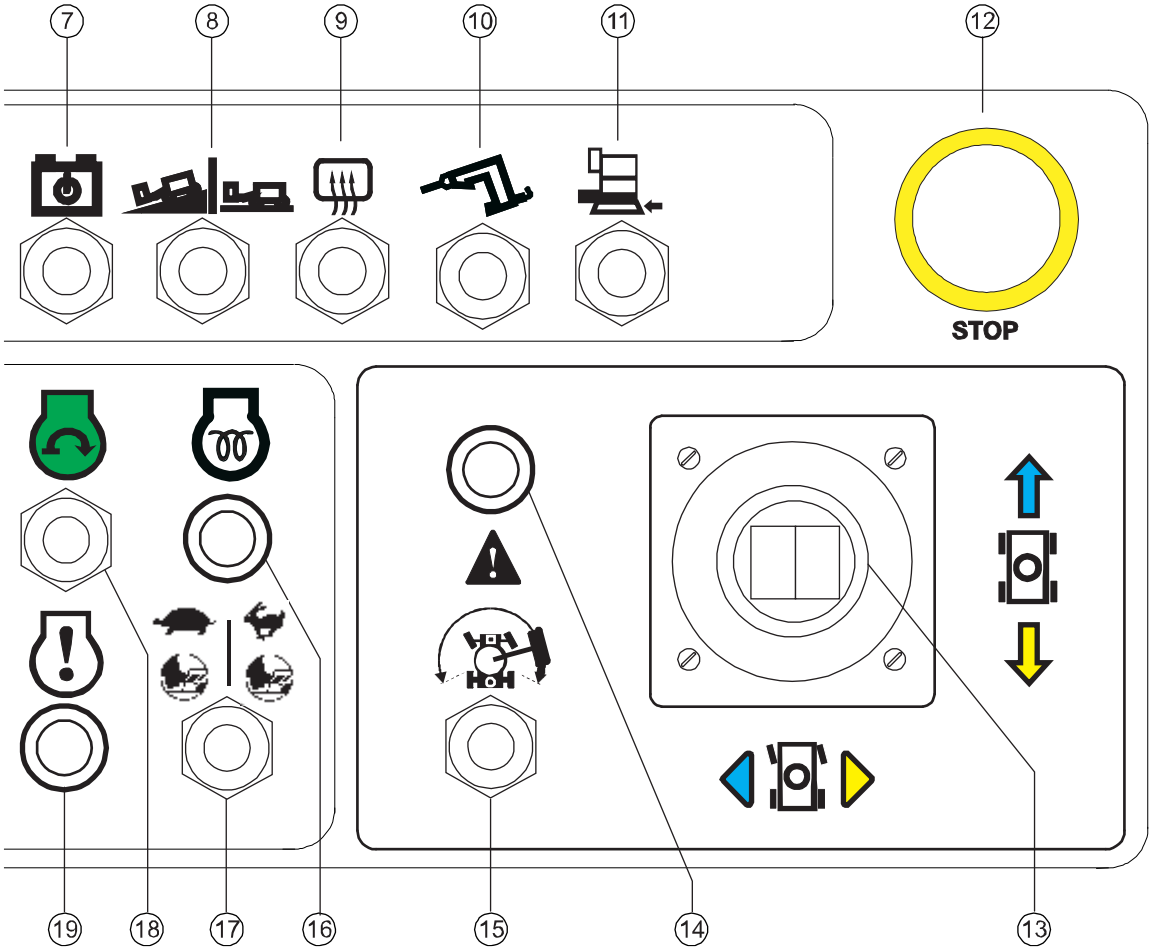

14 Drive enable indicator light
15 Drive enable switch
16 Glow plug indicator light
17 Engine idle (rpm) select switch
Turtle: foot switch activated low idle
Rabbit: foot switch activated high idle
18 Engine start switch
19 Models with LCD screen: Engine shut down indicator light
20 Proportional control handle for secondary boom up/down function
21 Primary boom extend/retract switch
22 Dual axis proportional control handle for boom up/down and turntable rotate left/right functions

Platform Control Panel, Models With LCD Screen

1 Horn button

Press this button and the horn will sound. Release the button and the horn will stop.

2 Platform level switch



Move the platform level switch up and the level of the platform will raise. Move the platform level switch down and the level of the platform will lower.

3 Platform rotate switch



Move the platform rotate switch to the right and the platform will rotate to the right. Move the platform rotate switch to the left and the platform will rotate to the left.

4 Jib boom up/down switch



Move the jib boom switch up and the jib boom will raise. Move the jib boom switch down and the jib boom will lower.

5 Platform overload indicator light

Light flashing indicates the platform is overloaded. The engine will stop and no functions will operate. Remove weight until the light goes off and then restart the engine.

6 Machine not level indicator light

Light on indicates the tilt sensor activation settings have been exceeded. See the instructions in the Operating Instructions section.

7 Auxiliary power switch with cover

Use auxiliary power if the primary power source (engine) fails.
Simultaneously hold the auxiliary power switch to either side and activate the desired function.

or

Auxiliary power switch

Use auxiliary power if the primary power source (engine) fails.
Simultaneously hold the auxiliary power switch to either side and activate the desired function.

8 Drive speed select switch

Machine on incline symbol: Low range operation for inclines.
Machine on level surface symbol: High range operation for maximum drive speed.

9 Platform control box heater (if equipped)

Move the heater switch up to turn on the platform control box heater. Move the heater switch down to turn off the platform control box heater.

10 Generator switch (if equipped)

Move the generator switch up to activate the generator. Move the switch down to turn off the generator.

Controls

11 Aircraft protection override switch (if equipped)

Move and hold the aircraft protection override switch to operate the machine when the platform bumper is against an object.

12 Red Emergency Stop button

Push in the red Emergency Stop button to the off position to stop all functions and turn the engine off. Pull out the red Emergency Stop button to the on position to operate the machine.

13 Dual axis proportional control handle for drive and steer functions.
OR
Proportional control handle for drive function and thumb rocker for steer function.

Move the control handle in the direction indicated by the blue arrow on the control panel and the machine will drive forward. Move the control handle in the direction indicated by the yellow arrow and the machine will drive backwards. Move the control handle in the direction indicated by the blue triangle and the machine will steer to the left. Move the control handle in the direction indicated by the yellow triangle and the machine will steer to the right.
OR
Move the control handle in the direction indicated by the blue arrow on the control panel and the machine will drive forward. Move the control handle in the direction indicated by the yellow arrow and the machine will drive backwards. Press the left side of the thumb rocker and the machine will steer to the left. Press the right side of the thumb rocker and the machine will steer to the right.

14 Drive enable indicator light

Light on indicates that the boom has moved just past either non-steer wheel and drive function has been interrupted.

15 Drive enable switch

To drive when the drive enable light is on, hold the drive enable switch to either side and slowly move the drive control handle off center. Be aware that the machine may move in the opposite direction that the drive and steer controls are moved.

16 Glow plug indicator light

The light comes on when the temperature is low.

17 Engine idle (rpm) select switch

Move the engine idle select switch to the turtle position for foot switch activated low idle. Move the engine idle select switch to the rabbit position for foot switch activated high idle.

18 Engine start switch

Move the engine start switch to either side to start the engine.

19 Models with LCD screen: Engine shut-down indicator light

Light on indicates that the engine has shut down. Contact service personnel.

20 Proportional control handle for secondary boom up/down function

Move the control handle up and the secondary boom will raise. Move the control handle down and the secondary boom will lower.



21 Primary boom extend/retract switch

Move the primary boom extend/retract switch up and the primary boom will retract. Move the boom extend/retract switch down and the primary boom will extend.



22 Dual axis proportional control handle for primary boom up/down and turntable rotate left/right functions

Move the control handle up and the primary boom will raise. Move the control handle down and the primary boom will lower.



Move the control handle to the right and the turntable will rotate to the right. Move the control handle to the left and the turntable will rotate to the left.



Inspections



Do Not Operate Unless:

☑ You learn and practice the principles of safe machine operation contained in this operator's manual.

1 Avoid hazardous situations.

2 Always perform a pre-operation inspection.

Know and understand the pre-operation inspection before going on to the next section.

3 Always perform function tests prior to use.

4 Inspect the workplace.

5 Only use the machine as it was intended.

Pre-operation Inspection Fundamentals

It is the responsibility of the operator to perform a pre-operation inspection and routine maintenance.

The pre-operation inspection is a visual inspection performed by the operator prior to each work shift. The inspection is designed to discover if anything is apparently wrong with a machine before the operator performs the function tests.

The pre-operation inspection also serves to determine if routine maintenance procedures are required. Only routine maintenance items specified in this manual may be performed by the operator.

Refer to the list on the next page and check each of the items.

If damage or any unauthorized variation from factory delivered condition is discovered, the machine must be tagged and removed from service.

Repairs to the machine may only be made by a qualified service technician, according to the manufacturer's specifications. After repairs are completed, the operator must perform a pre-operation inspection again before going on to the function tests.

Scheduled maintenance inspections shall be performed by qualified service technicians, according to the manufacturer's specifications.

Inspections

Pre-operation Inspection

- ❑ Be sure that the operator's manual is complete, legible and in the storage container located in the platform.
- ❑ Be sure that all decals are legible and in place. See Inspections section.
- ❑ Check for hydraulic oil leaks and proper oil level. Add oil if needed. See Maintenance section.
- ❑ Check for battery fluid leaks and proper fluid level. Add distilled water if needed. See Maintenance section.
- ❑ Check for engine oil leaks and proper oil level. Add oil if needed. See Maintenance section.
- ❑ Check for engine coolant leaks and proper level of coolant. Add coolant if needed. See Maintenance section.
- ❑ Check rubber tracks for signs of wear, cracks and cuts.

Check the following components or areas for damage, improperly installed, or missing parts and unauthorized modifications:

- ❑ Electrical components, wiring, and electrical cables
- ❑ Hydraulic hoses, fittings, cylinders, and manifolds
- ❑ Fuel and hydraulic tanks
- ❑ Drive and turntable motors and drive hubs
- ❑ Wear pads
- ❑ Tracks, sprocket, idler, bogey, undercarriage/frame, tensioner
- ❑ Engine and related components
- ❑ Limit switches and horn
- ❑ Contact alarm (if equipped)
- ❑ Alarms and beacons (if equipped)
- ❑ Nuts, bolts and other fasteners
- ❑ Platform entry mid-rail or gate
- ❑ Lanyard anchorage points
- ❑ Platform load cell
- ❑ Generator (if equipped)
- ❑ Tires and wheels

Check entire machine for:

- ❑ Cracks in welds or structural components
- ❑ Dents or damage to machine
- ❑ Excessive rust, corrosion or oxidation

- ❑ Verify that all structural and other critical components are present and all associated fasteners and pins are in place and properly tightened.
- ❑ After you complete your inspection, be sure that all compartment covers are in place and latched.

Pictures in this manual may show a boom with tires and wheels instead of tracks. All safety information and operating instructions still apply to the Z-62/40 TRAX, even if the picture does not show the tracks.

Inspections



Do Not Operate Unless:

☑ You learn and practice the principles of safe machine operation contained in this operator's manual.

1 Avoid hazardous situations.

2 Always perform a pre-operation inspection.

3 Always perform function tests prior to use.

Know and understand the function tests before going on to the next section.

4 Inspect the workplace.

5 Only use the machine as it was intended.

Function Test Fundamentals

The function tests are designed to discover any malfunctions before the machine is put into service. The operator must follow the step-by-step instructions to test all machine functions.

A malfunctioning machine must never be used. If malfunctions are discovered, the machine must be tagged and removed from service. Repairs to the machine may only be made by a qualified service technician, according to the manufacturer's specifications.

After repairs are completed, the operator must perform a pre-operation inspection and function tests again before putting the machine into service.

Inspections

At the Ground Controls

1 Select a test area that is firm, level and free of hazards.

2 Turn the key switch to ground control.

3 Pull out the red Emergency Stop button to the on position.

⊙ Result: The beacon (if equipped) should flash.

4 Start the engine. See Operating Instructions section.

Test Emergency Stop

5 Push in the red Emergency Stop button to the off position.

⊙ Result: The engine will shut off after 2 to 3 seconds.

6 Pull out the red Emergency Stop button to the on position and restart the engine.

Test Machine Functions

7 Do not push and hold the function enable button. Attempt to activate each boom and platform function toggle switch.



⊙ Result: No boom and platform functions should operate.

8 Press and hold the function enable button and activate each boom and platform function toggle switch.

⊙ Result: All boom and platform functions should operate through a full cycle. The descent alarm should sound while the boom is lowering.

Test the Tilt Sensor

9 Turn the key switch to platform control. Pull out the platform red Emergency Stop button to the on position.

10 Open the control panel side turntable cover and locate the tilt sensor next to the function manifold.



11 Press down one side of the tilt sensor.

⊙ Result: The alarm, located in the platform, should sound.

Test Auxiliary Controls

12 Turn the key switch to ground control and shut the engine off.

13 Pull out the red Emergency Stop button to the on position.

14 Simultaneously hold the auxiliary power switch on and activate each boom function toggle switch.



Note: To conserve battery power, test each function through a partial cycle.

⊙ Result: All boom functions should operate.

Inspections

At the Platform Controls

Test Emergency Stop

15 Turn the key switch to platform control and restart the engine.

16 Push in the platform red Emergency Stop button to the off position.

⊙ Result: The engine will shut off after 2 to 3 seconds.

17 Pull out the red Emergency Stop button and restart the engine.

Test the Horn

18 Press the horn button.

⊙ Result: The horn should sound.

Test the Foot Switch

19 Push in the platform red Emergency Stop button to the off position.

20 Pull out the red Emergency Stop button to the on position and do not start the engine.

21 Press down the foot switch and attempt to start the engine by moving the start toggle switch to either side.

⊙ Result: The engine should not start.

22 Do not press down the foot switch and restart the engine.

⊙ Result: The engine should start.

23 Do not press down the foot switch and test each machine function.

⊙ Result: No functions should operate.

Test Machine Functions

24 Press down the foot switch.

25 Activate each machine function control handle or toggle switch.

⊙ Result: All boom and platform functions should operate through a full cycle.

Models with 2 wheel steer

Test the Steering

26 Press down the foot switch.

27 Press the thumb rocker switch on top of the drive control handle in the direction indicated by the blue triangle on the control panel OR slowly move the control handle in the direction indicated by the blue triangle.

⊙ Result: The steer wheels, or steer tracks should turn in the direction that the blue triangles point on the drive chassis.

28 Press the thumb rocker switch in the direction indicated by the yellow triangle on the control panel OR slowly move the control handle in the direction indicated by the yellow triangle.

⊙ Result: The steer wheels, or steer tracks should turn in the direction that the yellow triangles point on the drive chassis.

Inspections

Models with 4 wheel steer

Test the Steering

29 Move the steer mode select switch and choose square-end (blue arrow) steer.

30 Slowly move the drive control handle in the direction indicated by the blue triangle on the control panel OR press the thumb rocker switch in the direction indicated by the blue triangle.

⊙ Result: The square-end wheels should turn in the direction that the blue triangles point on the drive chassis.

31 Slowly move the control handle in the direction indicated by the yellow triangle on the control panel OR press the thumb rocker switch in the direction indicated by the yellow triangle.

⊙ Result: The square-end wheels should turn in the direction that the yellow triangles point on the drive chassis.

32 Move the steer mode select switch and choose coordinated steer.

33 Slowly move the drive control handle in the direction indicated by the blue triangle on the control panel OR press the thumb rocker switch in the direction indicated by the blue triangle.

⊙ Result: The square-end wheels should turn in the direction that the blue triangles point on the drive chassis. The circle-end wheels should turn in the direction that the yellow triangles point on the drive chassis.

34 Slowly move the control handle in the direction indicated by the yellow triangle on the control panel OR press the thumb rocker switch in the direction indicated by the yellow triangle.

⊙ Result: The square-end wheels should turn in the direction that the yellow triangles point on the drive chassis. The circle-end wheels should turn in the direction that the blue triangles point on the drive chassis.

Inspections

Test Drive and Braking

35 Press down the foot switch.

36 Slowly move the drive control handle in the direction indicated by the blue arrow on the control panel until the machine begins to move, then return the handle to the center position.

⊙ Result: The machine should move in the direction that the blue arrow points on the drive chassis, then come to an abrupt stop.

37 Slowly move the control handle in the direction indicated by the yellow arrow on the control panel until the machine begins to move, then return the handle to the center position.

⊙ Result: The machine should move in the direction that the yellow arrow points on the drive chassis, then come to an abrupt stop.

Note: The brakes must be able to hold the machine on any slope it is able to climb.

Test the Drive Enable System

38 Press down the foot switch and lower the boom to the stowed position.

39 Rotate the turntable until the primary boom moves past one of the non-steer wheels.

⊙ Result: The drive enable indicator light should come on and remain on while the boom is anywhere in the range shown.



40 Move the drive control handle off center.

⊙ Result: The drive function should not operate.

41 Move and hold the drive enable toggle switch to either side and slowly move the drive control handle off center.

⊙ Result: The drive function should operate.

Note: When the drive enable system is in use, the machine may drive in the opposite direction that the drive and steer control handle is moved.

Use the color-coded direction arrows on the platform controls and the drive chassis to identify the direction of travel.

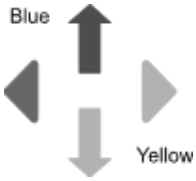

Inspections

Test Limited Drive Speed

42 Press down the foot switch.

43 Raise the primary boom approximately 2 ft / 61 cm.

44 Slowly move the drive control handle to the full drive position.

⊙ Result: The maximum achievable drive speed with the primary boom raised should not exceed 1 ft / 30 cm per second.

45 Lower the primary boom to the stowed position.

46 Extend the primary boom approximately 2 feet/61 cm.

47 Slowly move the drive control handle to the full drive position.

⊙ Result: The maximum achievable drive speed with the primary boom extended should not exceed 1 ft/30 cm per second.

48 Retract the primary boom to the stowed position.

49 Raise the secondary boom approximately 2 feet/61 cm.

50 Slowly move the drive control handle to the full drive position.

⊙ Result: The maximum achievable drive speed with the secondary boom raised should not exceed 1 ft / 30 cm per second.

51 Lower the secondary boom to the stowed position.

If the drive speed with the primary or secondary boom raised or the primary boom extended exceeds 1 ft/30 cm per second, immediately tag and remove the machine from service.

Test Drive Tilt Cutout

52 Press down the foot switch.

53 With the boom fully stowed, drive the machine onto a slope where the chassis pitch angle is greater than 2.5°.

⊙ Result: The machine should continue to drive.

54 Return to level ground and raise the primary boom to an out of stowed position (approximately 10° above horizontal).

55 Drive the machine onto a slope where the chassis pitch angle is greater than 2.5°.

⊙ Result: The machine should stop once the machine reaches 2.5° of chassis tilt and the alarm should sound at the platform controls.

56 Lower the primary boom to the stowed position.

⊙ Result: The alarm should turn off and the machine should drive.

57 Return to level ground and extend the primary boom approximately 1.6 ft / 0.5 m.

58 Drive the machine onto a slope where the chassis pitch angle is greater than 2.5°.

⊙ Result: The machine should stop once the machine reaches 2.5° of chassis tilt and the alarm should sound at the platform controls.

59 Retract the primary boom to the stowed position.

⊙ Result: The alarm should turn off and the machine should drive.

Inspections

60 Return to level ground and stow the boom.

61 With the boom fully stowed, drive the machine onto a slope where the chassis pitch angle is greater than 2.5°.

⊙ Result: The machine should continue to drive.

62 Return to level ground and raise the secondary boom to an out of stowed position (approximately 15° above horizontal).

⊙ Result: The machine should stop once the machine reaches 2.5° of chassis tilt and the alarm should sound at the platform controls.

63 Lower the secondary boom to the stowed position or drive in the opposite direction.

⊙ Result: The alarm should turn off and the machine should drive.

64 With the boom fully stowed, drive the machine onto a slope where the chassis roll angle is greater than 4.5°.

⊙ Result: The machine should continue to drive.

65 Return to level ground and raise the primary boom to an out of stowed position (approximately 10° above horizontal).

66 Drive the machine onto a slope where the chassis roll angle is greater than 4.5°.

⊙ Result: The machine should stop once the machine reaches 4.5° of chassis tilt and the alarm should sound at the platform controls.

67 Lower the primary boom to the stowed position or drive in the opposite direction.

⊙ Result: The alarm should turn off and the machine should drive.

68 Return to level ground and extend the primary boom approximately 1.6 ft / 0.5 m.

69 Drive the machine onto a slope where the chassis roll angle is greater than 4.5°.

⊙ Result: The machine should stop once the machine reaches 4.5° of chassis tilt and the alarm should sound at the platform controls.

70 Retract the primary boom to the stowed position.

⊙ Result: The alarm should turn off and the machine should drive.

71 Return to level ground and stow the boom.

72 With the boom fully stowed, drive the machine onto a slope where the chassis roll angle is greater than 4.5°.

⊙ Result: The machine should continue to drive.

73 Return to level ground and raise the secondary boom to an out of stowed position (approximately 15° above horizontal).

74 Drive the machine onto a slope where the chassis roll angle is greater than 4.5°.

⊙ Result: The machine should stop once the machine reaches 4.5° of chassis tilt and the alarm should sound at the platform controls.

75 Lower the secondary boom to the stowed position.

⊙ Result: The alarm should turn off and the machine should drive.

Inspections

Test the Oscillating Axle (if equipped)

76 Drive the right steer tire up onto a 6 in/15 cm block or curb.

⊙ Result: The three remaining tires should stay in firm contact with the ground.

77 Drive the left steer tire up onto a 6 in/15 cm block or curb.

⊙ Result: The three remaining tires should stay in firm contact with the ground.

78 Drive both steer tires up onto a 6 in/15 cm block or curb.

⊙ Result: The non-steer tires should stay in firm contact with the ground.

Test Auxiliary Controls

79 Push in the red Emergency Stop button to the off position to shut off the engine.

80 Pull out the red Emergency Stop button to the on position.

81 Press down the foot switch.

82 Simultaneously move and hold the auxiliary power switch and activate each function control handle, toggle switch or thumb rocker switch.

Note: To conserve battery power, test each function through a partial cycle.

⊙ Result: All boom and steer functions should operate. Drive functions should not operate with auxiliary power.

83 Restart the engine.

Test the Contact Alarm (if equipped)

84 Do not activate the foot switch and press on the contact alarm cable to release the actuator from the switch socket.

⊙ Result: The contact alarm lights will not flash and the machine horn will not sound.

85 Activate the foot switch by pressing the foot switch down.

⊙ Result: The contact alarm lights will flash and the machine horn will sound.

86 Insert the actuator into the switch socket.

⊙ Result: The lights and horn will turn off.

87 Activate the foot switch by pressing the foot switch down and press on the contact alarm cable to release the actuator from the switch socket.

⊙ Result: The contact alarm lights will flash and the machine horn will sound.

Inspections

88 Operate each machine function.

⊙ Result: All machine functions should not operate.

89 Insert the actuator into the switch socket.

⊙ Result: The lights and horn will turn off.

90 Operate each machine function.

⊙ Result: All machine functions should operate.

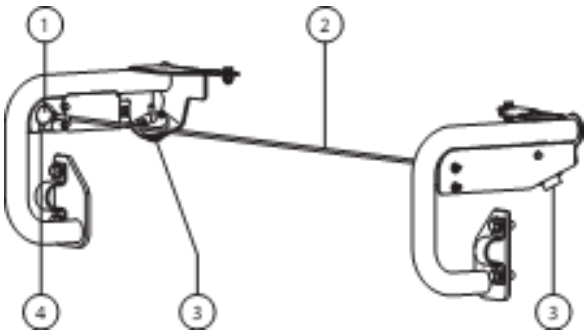

1 actuator
2 contact alarm cable
3 flashing alarm
4 switch socket

Test the Lift/Drive Select Function (if equipped)

91 Press down the foot switch.

92 Move the drive control handle off center and activate a boom function toggle switch.

⊙ Result: No boom functions should operate. The machine will move in the direction indicated on the control panel.

Repair any malfunctions before operating the machine.

Test Aircraft Protection Package (if equipped)

Note: Two people may be required to perform this test.

93 Extend the primary boom approximately 1 ft/30 cm.

94 Move the yellow bumper at the bottom of the platform 4 inches/10 cm in any direction.

95 Activate each function control handle or toggle switch.

⊙ Result: No boom and steer functions should operate.

96 Move and hold the aircraft protection override switch.

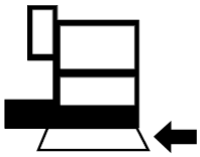

97 Activate each function control handle or toggle switch.

⊙ Result: All boom and steer functions should operate.

Inspections



Do Not Operate Unless:

☑ You learn and practice the principles of safe machine operation contained in this operator's manual.

1 Avoid hazardous situations.

2 Always perform a pre-operation inspection.

3 Always perform function tests prior to use.

4 Inspect the workplace.

Know and understand the workplace inspection before going on to the next section.

5 Only use the machine as it was intended.

Workplace Inspection Fundamentals

The workplace inspection helps the operator determine if the workplace is suitable for safe machine operation. It should be performed by the operator prior to moving the machine to the workplace.

It is the operator's responsibility to read and remember the workplace hazards, then watch for and avoid them while moving, setting up, and operating the machine.

Workplace Inspection Checklist

Be aware of and avoid the following hazardous situations:

- ❑ drop-offs or holes
- ❑ bumps, floor obstructions, or debris
- ❑ sloped surfaces
- ❑ unstable or slippery surfaces
- ❑ overhead obstructions and high voltage conductors
- ❑ hazardous locations
- ❑ inadequate surface support to withstand all load forces imposed by the machine
- ❑ wind and weather conditions
- ❑ the presence of unauthorized personnel
- ❑ other possible unsafe conditions

Inspections

Inspection for Decals with Symbols

Use the pictures on the next page to verify that all decals are legible and in place.

Below is a numerical list with quantities and descriptions.

Part No.	Decal Description	Qty
27204	Arrow – Blue	1
27205	Arrow – Yellow	1
27206	Triangle – Blue	2
27207	Triangle – Yellow	2
28158	Label – Unleaded*	1
28159	Label – Diesel*	1
28160	Label – Liquid Petroleum Gas*	1
28174	Label – Power to Platform, 230V	3
28235	Label – Power to Platform, 115V	3
44981	Label – Air Line to Platform (option)	2
52475	Label – Transport Tie Down**	6
65278	Caution – No Step	3
65278	Caution – No Step (option)	3
72086	Label – Lifting Point**	6
82240	Label – 105 dB	1
82481	Label – Battery/Charger Safety	1
82487	Label – Read the Manual*	3
82487	Label – Read the Manual (pipe cradle)***	2
82487	Label – Read the Manual (panel cradle)***	2
97815	Label – Lower Mid-rail	2
114236	Label – CB Symbol**	2
114248	Label – Tip-over Hazard, Tilt Alarm	1
114249	Label – Tip-over Hazard, Tires***	4
114251	Label – Explosion Hazard	2
114252	Label – Tip-over Hazard, Limit Switches	5
133067	Label – Electrocution Hazard	3
133205	Label – Electrocution/Burn Hazard	1
133263	Label – Tracks Specifications***	4
215526	Label – Belt Routing (MSG-425)	1
219954	Label – Tip-over Hazard	1
219956	Label – Platform Overload	1
219958	Label – Tip-over, Crush Hazard	1
1253845	Ground Control Panel	1
1256425	Label – Danger, Electrocution Hazard*	3
1257658	Label – Wheel Load, Z-62***	4
1257659	Label – Transport/Lifting	2
1257660	Label – Manual Lowering, Z-62	1
1257661	Label – Slope Rating, Z-62	1
1263542	Label – Compartment Access	2
1272242	Label – Machine Registration/Owner Transfer	1
1272876	Label – Track Load, Z-62/40 TRAX***	4
1273574	Platform Control Panel, models with LCD screen*	1
1273578	Platform Control Panel*	1
1278542	Label – Contact Alarm Weight	1
1278982	Label – Actuator Switch Socket	1
1281175	Label – Lanyard Anchorage Point, Fall Restrained	8
1286362	Label – Crush Hazard, Service	1
1298991	Warning – Panel Cradle (option) *	2
1301030	Label – Diesel, Stage V*	1
1301075	Label – Center the Raw Air Hose (Stage V)	1
1304217	Label – Explosion Hazard*	2
1313946	Label – Emission Info (Stage IV)	1

Shading indicates decal is hidden from view, i.e. under covers

* These decals are model, option or configuration specific.

** These decals are installed on both sides of chassis.

*** These decals are installed on both sides of chassis and are model, option, or configuration specific.

Inspections

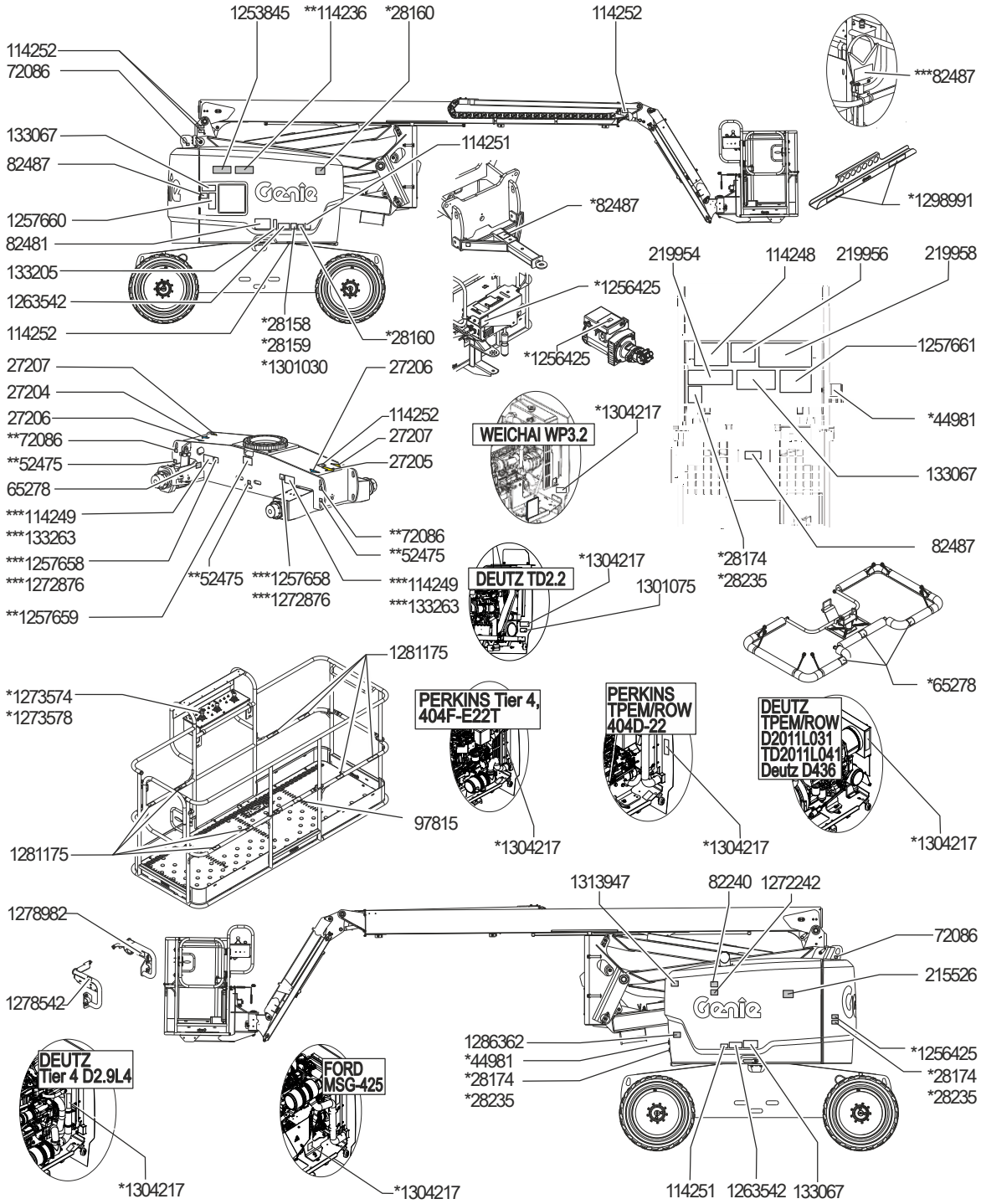

Operating Instructions

Pictures in this manual may show a boom with tires and wheels instead of tracks. All safety information and operating instructions still apply to the Z-62/40 TRAX, even if the picture does not show the tracks.



Do Not Operate Unless:

☑ You learn and practice the principles of safe machine operation contained in this operator's manual.

1 Avoid hazardous situations.

2 Always perform a pre-operation inspection.

3 Always perform function tests prior to use.

4 Inspect the workplace.

5 Only use the machine as it was intended.

Fundamentals

The Operating Instructions section provides instructions for each aspect of machine operation. It is the operator's responsibility to follow all the safety rules and instructions in the operator's manual.

Using the machine for anything other than lifting personnel, along with their tools and materials, to an aerial work site is unsafe and dangerous.

Only trained and authorized personnel should be permitted to operate a machine. If more than one operator is expected to use a machine at different times in the same work shift, they must all be qualified operators and are all expected to follow all safety rules and instructions in the operator's manual. That means every new operator should perform a pre-operation inspection, function tests, and a workplace inspection before using the machine.

Operating Instructions

Starting the Engine

Gasoline/LPG models

1 At the ground controls, turn the key switch to the desired position.

2 Be sure both ground and platform control red Emergency Stop buttons are pulled out to the on position.

3 Choose fuel by moving the fuel select switch to the desired position.

4 Move the engine start toggle switch to either side. If the engine fails to start or dies, the restart delay will disable the start switch for 3 seconds.

Diesel models

1 At the ground controls, turn the key switch to the desired position.

2 Be sure both ground and platform control red Emergency Stop buttons are pulled out to the on position.

Models with glow plug toggle switch:

3 Move the glow plug switch to either side and hold for 3 to 5 seconds.

4 Move the engine start toggle switch to either side. If the engine fails to start or dies, the restart delay will disable the start switch for 3 seconds.

Models with automatic glow plugs:

5 The LCD screen will display the glow plug symbol when the automatic glow plugs are on.



6 When the automatic glow plug symbol turns off, move the engine start toggle switch to either side. If the engine fails to start or dies, the restart delay will disable the start switch for 3 seconds.

All models

If the engine fails to start after 15 seconds of cranking, determine the cause and repair any malfunction. Wait 60 seconds before trying to start again.

In cold conditions, 20°F/-6°C and below, warm the engine for 5 minutes before operating to prevent hydraulic system damage.

In extreme cold conditions, 0°F/-18°C and below, machines should be equipped with optional cold start kits. Attempting to start the engine when temperatures are below 0°F/-18°C may require the use of a booster battery.

Gasoline/LPG models: In cold conditions, 20°F/-6°C and below, the machine should be started on gasoline and warmed for 2 minutes, then switched to LPG. Warm engines can be started on LPG.

Operating Instructions

Emergency Stop

Push in the red Emergency Stop button to the off position at the ground controls or the platform controls to stop all machine functions and turn the engine off.

Repair any function that operates when either red Emergency Stop button is pushed in.

Selecting and operating the ground controls will override the platform red Emergency Stop button.

Auxiliary Power

Use auxiliary power if the primary power source (engine) fails.

1 Turn the key switch to ground or platform control.

2 Pull out the red Emergency Stop button to the on position.

3 Press down the foot switch when using the controls from the platform.

4 If equipped: Break the security tie and lift the auxiliary power switch cover.

Note: If the security tie is broken or missing, consult the appropriate Genie Service Manual.

5 Simultaneously hold the auxiliary power switch on and activate the desired function.



The drive function will not operate with auxiliary power.

Operation from Ground

1 Turn the key switch to ground control.

2 Pull out the red Emergency Stop button to the on position.

3 Gasoline/LPG models: Choose fuel by moving the fuel select switch to the desired position.

4 Start the engine.

To Position Platform

1 Press and hold a function enable button.



2 Move the appropriate toggle switch according to the markings on the control panel.

Drive and steer functions are not available from the ground controls.

Platform Overload Indicator Light

Light flashing indicates the platform is overloaded. The engine will stop and no functions will operate.

Remove weight from the platform until the light goes off and then restart the engine.

Note: An alarm will sound at the platform when an overload condition occurs and will stop sounding when weight is removed from the platform.

Operating Instructions

Operation from Platform

1 Turn the key switch to platform control.

2 Pull out both ground and platform red Emergency Stop buttons to the on position.

3 Gasoline/LPG models: Choose fuel by moving the fuel select switch to the desired position.

4 Start the engine. Do not press down the foot switch when starting the engine.

To Position Platform

1 Press down the foot switch.

2 Slowly move the appropriate function control handle or toggle switch or press the appropriate button according to the markings on the control panel.

To Steer

1 Press down the foot switch.

2 Slowly move the drive control handle in the direction indicated by blue or yellow triangles OR press the thumb rocker switch located on top of the drive control handle.

Use the color-coded direction arrows on the platform controls and the drive chassis to identify the direction the wheels or tracks will turn.

To Drive

1 Press down the foot switch.

2 Increase speed: Slowly move the control handle off center.

Decrease speed: Slowly move the control handle toward center.

Stop: Return the control handle to center or release the function enable switch.

Use the color-coded direction arrows on the platform controls and the drive chassis to identify the direction the machine will travel.

Machine travel speed is restricted when the boom is raised.

Platform Overload Indicator Light

Light flashing indicates the platform is overloaded. The engine will stop and no functions will operate.

Remove weight from the platform until the light goes off and then restart the engine.

Note: An alarm will sound at the platform when an overload condition occurs and will stop sounding when weight is removed from the platform.

Operating Instructions

⚠ Driving on a slope

Determine the uphill, downhill and side slope ratings for the machine and determine the slope grade.



Maximum slope rating, platform downhill (gradeability):
2WD: 30% (17°)
4WD: 45% (24°)



Maximum slope rating, platform uphill:
2WD: 10% (6°)
4WD: 30% (17°)



Maximum side slope rating:
25% (14°)

Note: Slope rating is subject to ground conditions with one person in the platform and adequate traction. Additional platform weight may reduce slope rating. The term gradeability applies to the counterweight uphill configuration only.

Be sure the boom is below horizontal and the platform is between the non-steer wheels.

Move the drive speed select switch to machine on incline symbol.

To determine the slope grade:

Measure the slope with a digital inclinometer OR use the following procedure.

You will need:

- carpenter's level
- straight piece of wood, at least 3 feet/1 m long
- tape measure

Lay the piece of wood on the slope.

At the downhill end, lay the level on the top edge of the piece of wood and lift the end until the piece of wood is level.

While holding the piece of wood level, measure the vertical distance from the bottom of the piece of wood to the ground.

Divide the tape measure distance (rise) by the length of the piece of wood (run) and multiply by 100.

Example:

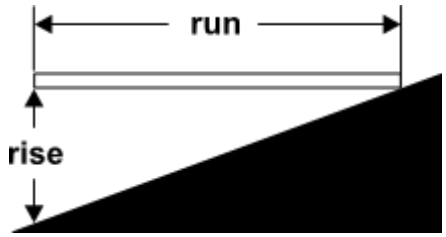

Piece of wood = 144 inches (3.6 m)

Run = 144 inches (3.6 m)

Rise = 12 inches (0.3 m)

12 in ÷ 144 in = 0.083 x 100 = 8.3% grade
0.3 m ÷ 3.6 m = 0.083 x 100 = 8.3% grade

If the slope exceeds the maximum slope or side slope rating, then the machine must be winched or transported up or down the slope. See Transport and Lifting section.

Operating Instructions

Drive Enable

Light on indicates that the boom has moved just past either non-steer wheel and the drive function has been interrupted.



To drive, hold the drive enable switch to either side and slowly move the drive control handle off center.

Be aware that the machine may move in the opposite direction that the drive and steer controls are moved.

Always use the color-coded direction arrows on the platform controls and the drive chassis to identify the direction the machine will travel.

Drive Speed Select



- Machine on incline symbol: Low range operation for inclines
- Machine on level surface symbol: High range operation for maximum drive speed.

Machine Not Level Indicator Light



If the tilt alarm sounds when the platform is raised, the Machine Not Level indicator light will come on and the drive function in one or both directions will not operate. Identify the condition of the boom on the slope as shown below. Follow the steps to lower the boom before moving to a firm, level surface. Do not rotate the boom while lowering.

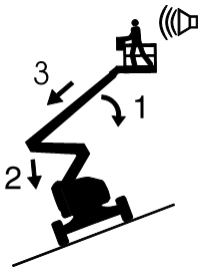

If the tilt alarm sounds with the platform uphill:

1 Lower the primary boom.

2 Lower the secondary boom.

3 Retract the primary boom.

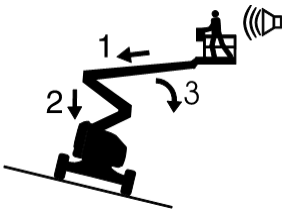

If the tilt alarm sounds with the platform downhill:

1 Retract the primary boom.

2 Lower the secondary boom.

3 Lower the primary boom.

Operating Instructions

Tilt Sensor Activation Settings

Model	Chassis Angle (side to side)	Chassis Angle (front to back)
Z-62/40	4.5°	2.5°
Z-62/40 TraX	4.5°	2.5°



When the Machine On Incline indicator light is on and the tilt alarm sounds, the following functions are affected; drive functions are disabled.

To restore drive functions, follow the steps to lower the boom in the Machine Not Level Indicator Light procedure.



When the machine is stowed, on a slope, and the tilt alarm sounds, the following functions are affected; lift functions are disabled.

Return the machine to level ground to restore lift functions.

Engine Idle Select (rpm)

When the foot switch is not pressed, the engine will idle at the lowest rpm.



- Turtle symbol: Foot switch activated low idle
- Rabbit symbol: Foot switch activated high idle

If foot switch activated low idle or high idle do not work, contact service personnel within 24 hours.

Foot switch activated idle settings are disabled by certain fault codes.

Generator (if equipped)



To start the generator, move the generator toggle switch to the on position.

Plug a power tool into the power to platform GFCI outlet.

To turn off the generator, move the generator toggle switch to the off position.

Note: Machine functions will not operate while the generator is running and the foot switch is not pressed down. When the foot switch is pressed down, the generator will turn off and the machine functions will operate.

Operating Instructions

Check Engine Light



Light on and engine stopped: Tag the machine and remove from service.

Light on and engine still running: Contact service personnel within 24 hours.

Control Box Heater (if equipped)



Move the control box heater switch up to activate the heater.

Engine Shut-down indicator light (if equipped)



Light on: Tag and remove the machine from service.

Platform Overload Indicator Light



Light flashing indicates the platform is overloaded. The engine will stop and no functions will operate.

Remove weight from the platform until the light goes off and then restart the engine.

When the machine is stowed, on a slope, and the tilt alarm sounds, the following functions are affected; lift functions are disabled.

Aircraft Protection Package (if equipped)

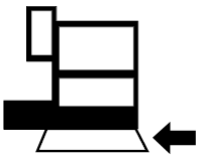

If the platform bumper comes into contact with an object, the machine will shut down and no functions will operate.

1 Start the engine.

2 Press down the foot switch.

3 Move and hold the aircraft protection override switch.

4 Move the appropriate function control handle or toggle switch to move the machine away from aircraft components.

Operating Instructions

Contact Alarm (if equipped)

The contact alarm is designed to alert ground personnel when an operator makes contact with the platform control panel, interrupting boom movement, sounding an alarm and flashing warning lights.

When the contact alarm cable is tripped, the lift and drive functions are disabled at the platform. The audio and visual warnings will activate alerting others that assistance may be needed. These notifications will continue until the system is reset.

1 The contact alarm cable is tripped, releasing the actuator from the switch socket.

2 Insert the actuator into the switch socket to turn off flashing lights and audio alarm.

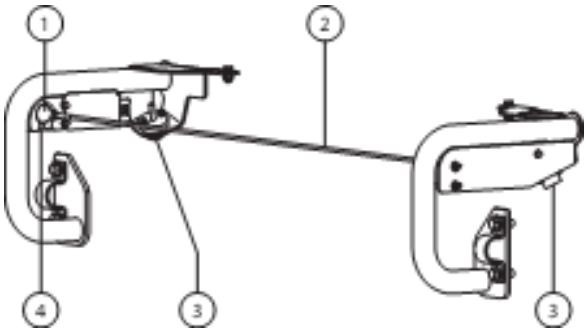

1 actuator
2 contact alarm cable
3 flashing alarm
4 switch socket

LCD Screen (if equipped)



The LCD screen at the ground controls displays hour meter, voltage, oil pressure and coolant temperature. The screen also displays fault codes and other service information.

Operating Instructions

Standstill Regeneration (if equipped)

When the LCD screen displays the message "Regen Warning Lvl 1" (level 1 or higher), the DPF (Diesel Particulate Filter) requires a Standstill Regeneration.

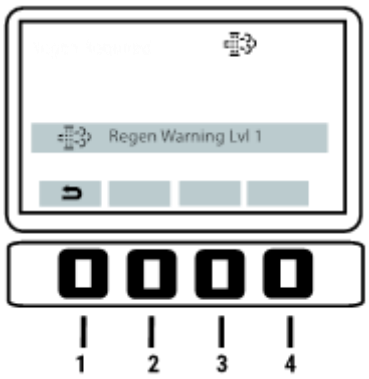

Note: At the end of the regeneration procedure, make sure to move the Regeneration Enable switch to the right, otherwise the machine functions are locked.

⚠ During the DPF standstill generation process, all boom functions are disabled.

⚠ Keep clear of the engine exhaust and muffler.

⚠ Don't leave the machine unattended.

⚠ The DPF standstill regeneration cannot be activated if not requested by the engine, or in the presence of some engine faults.

⚠ If the standstill regeneration request is ignored, the soot in the DPF can reach extreme levels. The filter will be permanently damaged and will have to be replaced by a qualified service technician.

⚠ If this occurs, the following message will be displayed "Not possible, service needed".

⚠ Under emergencies, the DPF standstill regeneration can be interrupted in three ways:

- The engine is turned off by the key switch.
- The ESC button is pressed.
- The ESTOP stop button is pushed.

If this occurs, the standstill regeneration may need to be restarted.

⚠ The DPF standstill regeneration cannot begin until the engine has been run for at least two minutes and the coolant temperature has reached 35°C.

To start the regeneration, proceed as follows.

1 Close the engine side cover.

2 Select a safe parking location—firm and level, clear of obstructions and traffic, clear of flammable material and clear of explosive gasses.

3 At the ground control panel, turn the key switch to the ground position.

4 At the ground Control Panel, move the Regeneration Enable switch to the left to disable all the machine functions.

5 Press the control button 4 below the LCD screen twice.

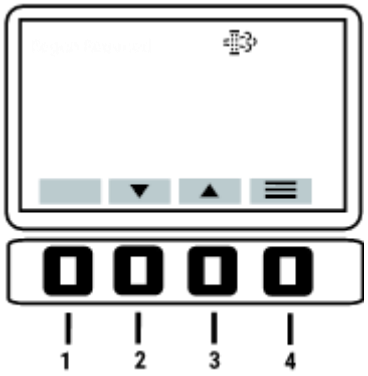

Operating Instructions

6 Using the control buttons 2 and 3 below the LCD screen, select "Diagnostics" from the Main Menu. Press the control button 4 to confirm the selection.

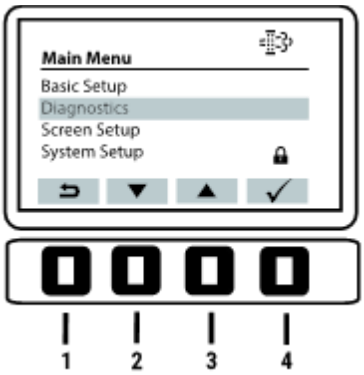

7 Using the control buttons 2 and 3 below the LCD screen, select "Regen Menu". Press the control button 4 to confirm the selection.

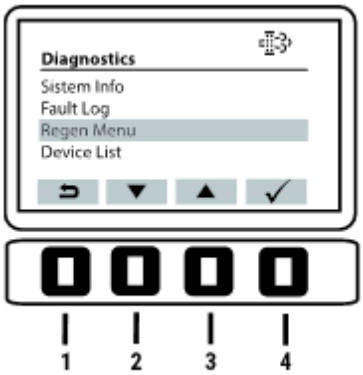

8 Using the control buttons 2 and 3 below the LCD screen, select "Initiate Regen". Press the control button 4 to confirm the selection.

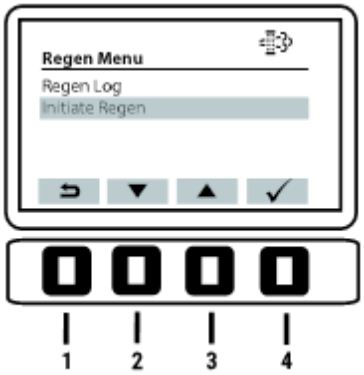

9 The LCD screen will display the message "Initiate Regen". Press the control button 4 to confirm.

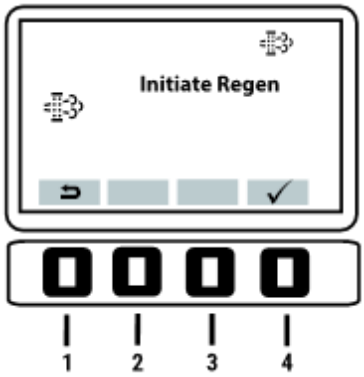

Operating Instructions

10 The LCD screen will display the message " Warning: Machine must be in a nonflammable environment". Press the control button 4 to confirm.



11 The LCD screen will display the message "Notice: All functions will lock. Regen takes approx 1 hour". Press the control button 4 to confirm.



12 If the engine is not already running, the LCD screen displays the message "Start Engine".

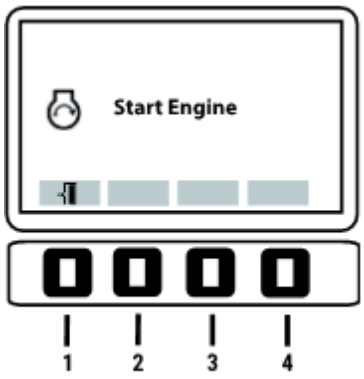

13 Start the engine. The engine will go into a pre-warm cycle.

14 The LCD screen will display the message "Standstill Regen Active Minutes remaining: 35".

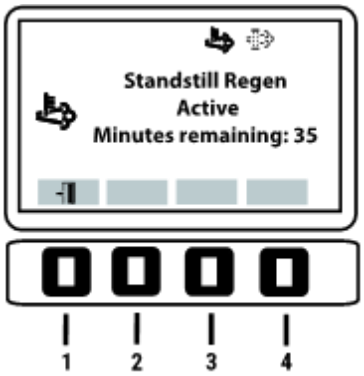

Operating Instructions

15 The regeneration process auto-advances and once it is completed the LCD screen displays the message "Regen Successful".

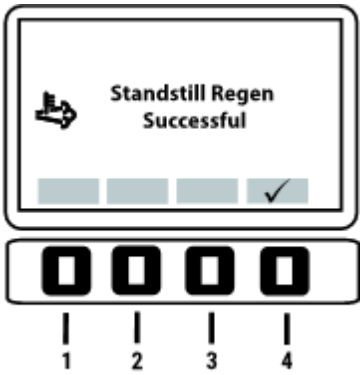

16 At the ground Control Panel, move the Regeneration Enable switch to the right to enable all the machine functions.

Pipe Cradle Instructions

The pipe cradle assembly consists of 2 pipe cradles positioned at either side of the platform and mounted to the guardrails with U-bolts.

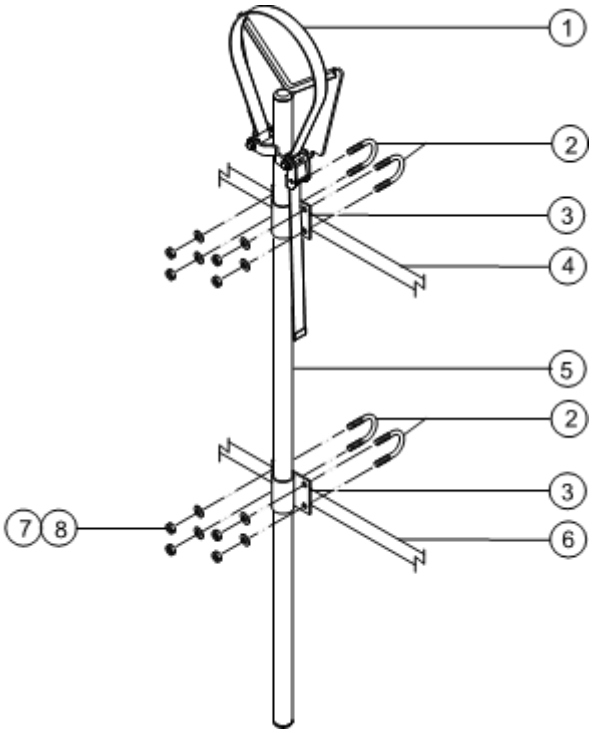

1 strap
2 U-bolts
3 pipe cradle mount
4 upper platform railing
5 pipe cradle weldment
6 middle platform railing
7 flat washers
8 nylock nuts

Operating Instructions

Observe and Obey:

☑ Pipe cradles must be installed on the inside of the platform.

☑ Pipe cradles must not obstruct the platform controls or the platform entrance.

☑ The bottom of the pipe cradle tube must rest on the platform floor.

☑ Be sure the platform is level before installing a pipe cradle.

Pipe Cradle Installation

1 Install a pipe cradle on each side of the platform. Refer to the illustration on the left. Make sure the bottom of the pipe cradle tube rests on the platform floor.

2 Install two U-bolts from the outside of the platform rails through each pipe cradle mount.

3 Secure each U-bolt with 2 washers and 2 nuts.

Pipe Cradle Operation

1 Be sure the pipe cradle assembly and installation instructions have been followed properly and that the pipe cradles are secured to the platform railings.

2 Place the load so that it rests in both pipe cradles. The length of the load should be parallel with the length of the platform.

3 Center the load in the pipe cradles.

4 Secure the load to each pipe cradle. Pass the nylon strap over the load. Depress the buckle and slide the strap through. Tighten the strap.

5 Gently push and pull on the load to make sure the pipe cradles and load are secure.

6 Keep the load secured when the machine is moving.

⚠ Tip-over hazard. The weight of the pipe cradle assembly and the load in the pipe cradles will reduce the rated platform capacity of the machine and must be factored into the total platform load.

⚠ Tip-over hazard. The weight of the pipe cradle assembly and the load in the pipe cradles may limit the maximum number of occupants in the platform.

Maximum Pipe Cradle Capacity	
All models	200 lbs 90.7 kg
Pipe Cradle Assembly Weight	21 lbs 9.5 kg

Operating Instructions

Panel Cradle

Genie has produced 2 different styles of Panel Cradles, they are referred to as, Bolt-in and Weld-in. This designation refers to the toeboard and how it is attached to the platform, use the appropriate instructions below for your style of Panel Cradle

Panel Cradle Assembly - Bolt In

1 Apply the warning decal to the front of each panel cradle (if needed).

2 Install rubber bumper 1 in the panel cradle base. See the illustration.

3 Secure the bumper with 2 high profile lock nuts and 2 washers.

Panel Cradle Installation - Bolt In

1 Insert the hook piece through the slots in the panel cradle base.

2 Hook the panel cradle to the bottom platform tube in the desired location.

3 Install rubber bumper 2 through the panel cradle base and the hook piece. See the illustration.

4 Secure with 2 low profile lock nuts.

5 If the panel cradle is installed at a platform floor support tube, insert the U-bolt through the floor, around the tube and into the panel cradle base.

6 Secure the U-bolt with 2 nuts and 2 washers. Proceed to step 9.

7 If the panel cradle is not installed at a platform floor support tube, use the aluminum tube provided.

8 Place the tube between the panel cradle and the platform floor. Insert the U-bolt through the floor, around the tube and into the panel cradle base.

9 Repeat above for the second set of parts.

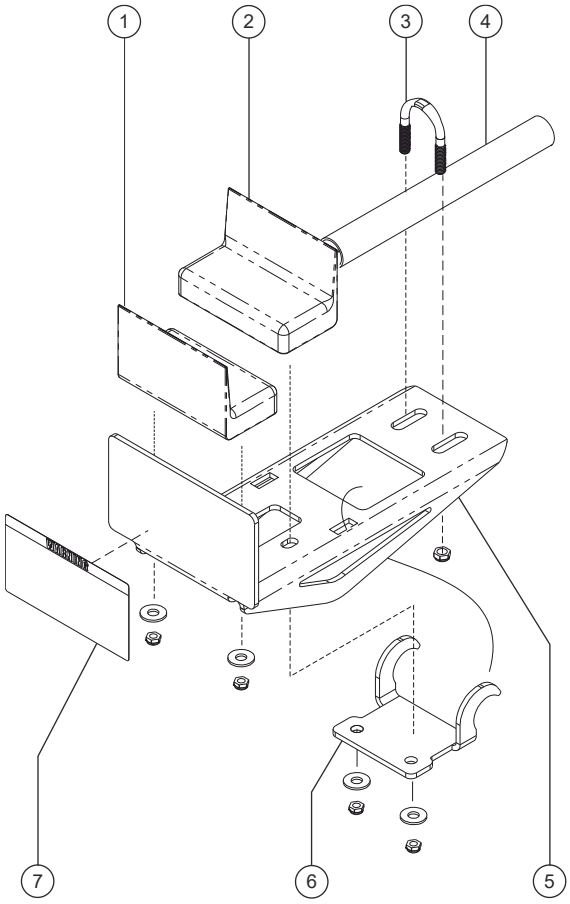

1 rubber bumper 1
2 rubber bumper 2
3 U-Bolt
4 aluminum tube
5 panel cradle base
6 hook piece
7 warning decal

Operating Instructions

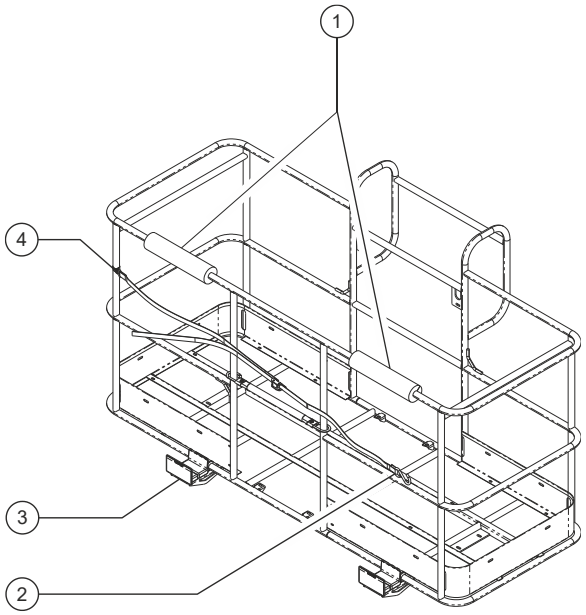

1 foam pad x 2
2 hook
3 panel cradle x 2
4 clamp

Panel Cradle Assembly - Weld-In

1 Weld-in Panel Cradle comes pre-assembled.

Panel Cradle Installation - Weld-In

Note: Perform this procedure on a firm, level surface with the boom in the stowed position.

Note: Kit decals should already be installed onto the tray.

1 Adjust the platform so that the toe board at the front of the platform is at a comfortable working height.

2 Place the Panel Cradle Tray over the toe board and push it down until the tray is flush across the top of the toe board with the slots on the back of the tray aligned with corresponding slots in the toe board.

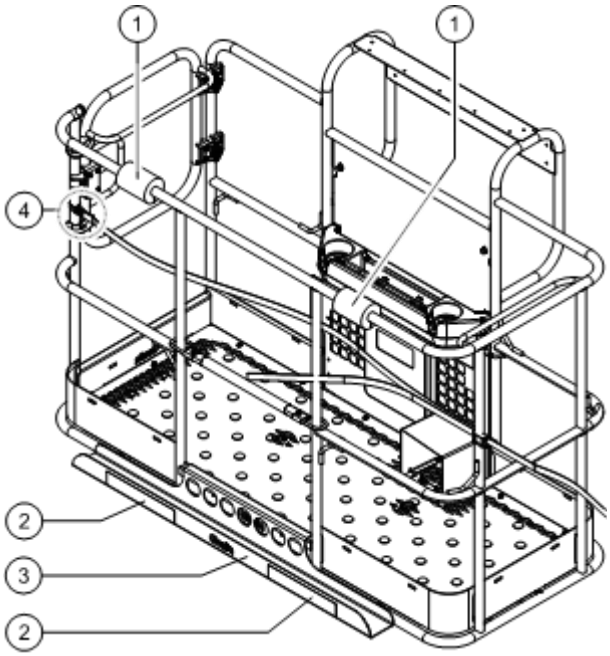

1 foam pad x 2
2 decal x 2
3 panel cradle tray
4 clamp

3 Use the provided fasteners to secure the tray to the platform. Tighten the fasteners.

Operating Instructions

Installation of Padding

Install the 2 pieces of padding on the platform rails. Position the padding to protect the panels from contact with the platform rails.

Installation of Strap

1 Open the clamp and install it around a vertical platform rail tube.

2 Insert a bolt with a washer through one side of the clamp.

3 Install the strap assembly end plate onto the bolt.

4 Insert the bolt through the other side of the clamp.

Secure with a washer and a nut. Do not over-tighten.

Note: The strap assembly must be secured between the clamp.

Note: The strap assembly should be able to slide freely up and down the platform rail.

Panel Cradle Operation

Note: The bolt-in style has 2 cradles and the Weld-in has 1.

Operating Instructions:

1 Secure the panel cradle and strap assembly to the platform.

2 Center the load on the platform.

3 Secure the load to the platform using the strap.

4 Tighten the strap.

Operating Instructions

After Each Use

1 Select a safe parking location—firm level surface, clear of obstruction and traffic.

2 Retract and lower the boom to the stowed position.

3 Rotate the turntable so that the boom is between the non-steer wheels.

4 Turn the key switch to the off position and remove the key to secure from unauthorized use.

Machine Storage

Properly preparing and stowing the machine for extended storage will make it easier to put the machine back into service.

1 See After Each Use section for basic machine stowing instructions.

2 Store the machine in a dry and well-ventilated location. Be sure machine is clean and dry.

3 Perform a complete Pre-Operation Inspection.

Models with Engines: fill the fuel tank.

4 Refer to the Scheduled Maintenance section in the appropriate Service Manual, and complete each lubrication procedure.

5 Remove and store the battery.

6 Models with Engines: Refer to the OEM engine manual for additional extended storage procedures. As needed, start and run the engine for 10 minutes.

Towing Instructions

Using the Tow Package

Before Towing:

1 Position the machine on a level surface. Chock the wheels to prevent the machine from rolling.

2 Attach the tow bar securely to the machine. Attach the tow bar securely to the towing vehicle.

3 Release the drive torque hubs by turning over the drive hub disconnect caps.

4 4WD models: Release the front drive torque hubs by turning over the drive disconnect caps.

5 Turn the steering bypass valve counterclockwise to hydraulically release the steering.

⚠WARNING Do not exceed recommended maximum towing speed or maximum towing times.

Maximum tow speed	**8 mph/13 km/h**
Maximum towing time at 8 mph/13 km/h	**30 minutes**
Maximum towing time at 6 mph/10 km/h	**60 minutes**

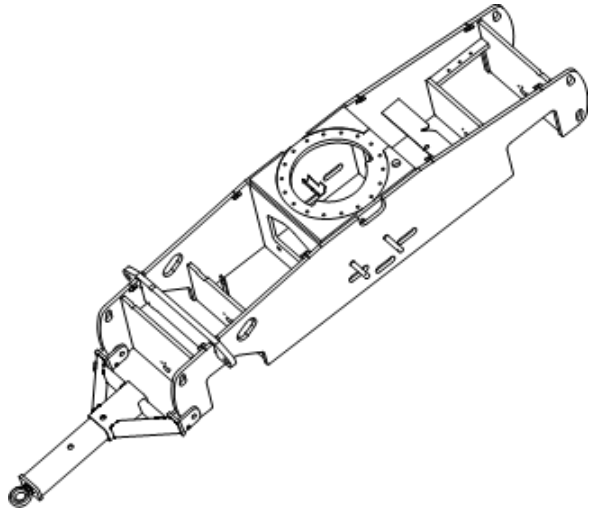

After Towing:

1 Immediately after towing, chock the wheels, detach the tow bar and reverse the drive hub disconnect caps.

2 Secure the tow bar back onto the machine.

3 Test steer, drive and brake functions on a level surface prior to returning the machine to operation. See Function Tests.

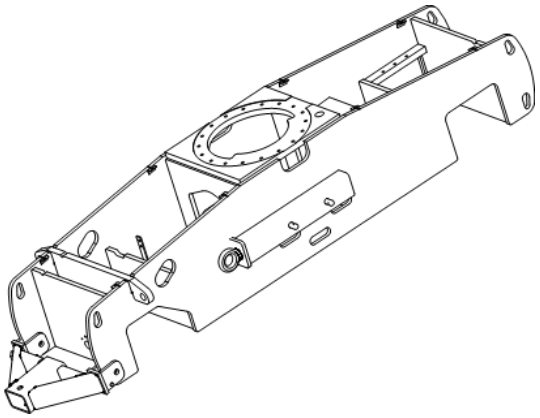

Transport and Lifting Instructions

Observe and Obey:

- ☑ Genie provides this securement information as a recommendation. Drivers are solely responsible for making sure machines are properly secured and the correct trailer is selected.
- ☑ Genie customers needing to containerize any lift or Genie product should source a qualified freight forwarder with expertise in preparing, loading and securing construction and lifting equipment for international shipment.
- ☑ Only qualified mobile elevating work platform operators should move the machine on or off the truck.
- ☑ The transport vehicle must be parked on a level surface.
- ☑ The transport vehicle must be secured to prevent rolling while the machine is being loaded.
- ☑ Be sure the vehicle capacity, loading surfaces and chains or straps are sufficient to withstand the machine weight. Genie lifts are very heavy relative to their size. See the serial label for the machine weight. See the inspections section for the serial label location.
- ☑ Be sure the turntable is secured with the turntable rotation lock before transporting. Be sure to unlock the turntable for operation.
- ☑ Do not drive the machine on a slope that exceeds the uphill, downhill or side slope rating. See Driving on a Slope in the Operating Instructions section.
- ☑ If the slope of the transport vehicle bed exceeds the uphill or downhill maximum slope rating, the machine must be loaded and unloaded using a winch as described in the brake release operation. See the Specifications section for the slope ratings.

Free-wheel Configuration for Winching

Chock the wheels to prevent the machine from rolling.

Release the non-steer wheel brakes by turning over the drive hub disconnect caps.

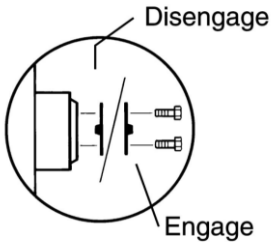

Be sure the winch line is properly secured to the drive chassis tie points and the path is clear of all obstructions.

Reverse the procedures described to re-engage the brakes.

Transport and Lifting Instructions

Securing to Truck or Trailer for Transit

Always use the turntable rotation lock pin each time the machine is transported.

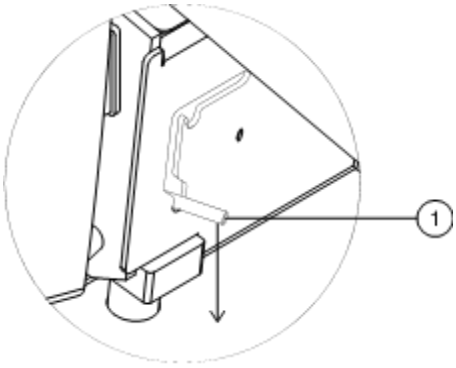

1 Turntable rotation lock pin

Turn the key switch to the off position and remove the key before transporting.

Inspect the entire machine for loose or unsecured items.

Securing the Chassis

Use chains of ample load capacity.

Use a minimum of 6 chains.

Adjust the rigging to prevent damage to the chains.

For diagram, refer to the Lifting Instructions.

Securing the Platform

Make sure the jib and platform are in the stowed position.

Secure the platform with a nylon strap placed through the lower platform support. Do not use excessive downward force when securing the boom section.

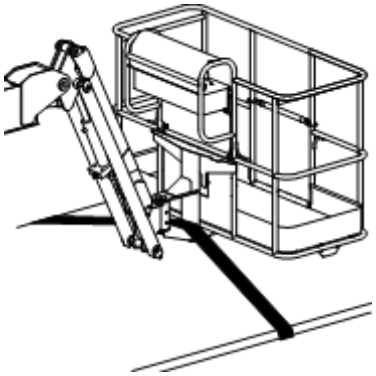

Transport and Lifting Instructions

Observe and Obey:

- ☑ Only qualified riggers should rig the machine.
- ☑ Only certified crane operators should lift the machine and only in accordance with the applicable crane regulations.
- ☑ Be sure the crane capacity, loading surfaces and straps or lines are sufficient to withstand the machine weight. See the serial label for the machine weight.

Lifting Instructions

Fully lower and retract the boom. Fully lower the jib. Remove all loose items on the machine.

Determine the center of gravity of your machine using the table and the picture on this page.

Attach the rigging only to the designated lifting points on the machine.

Adjust the rigging to prevent damage to the machine and to keep the machine level.

Center of gravity	X Axis	Y Axis
Z-62/40	3.6 ft 1.09 m	4.5 ft 1.37 m

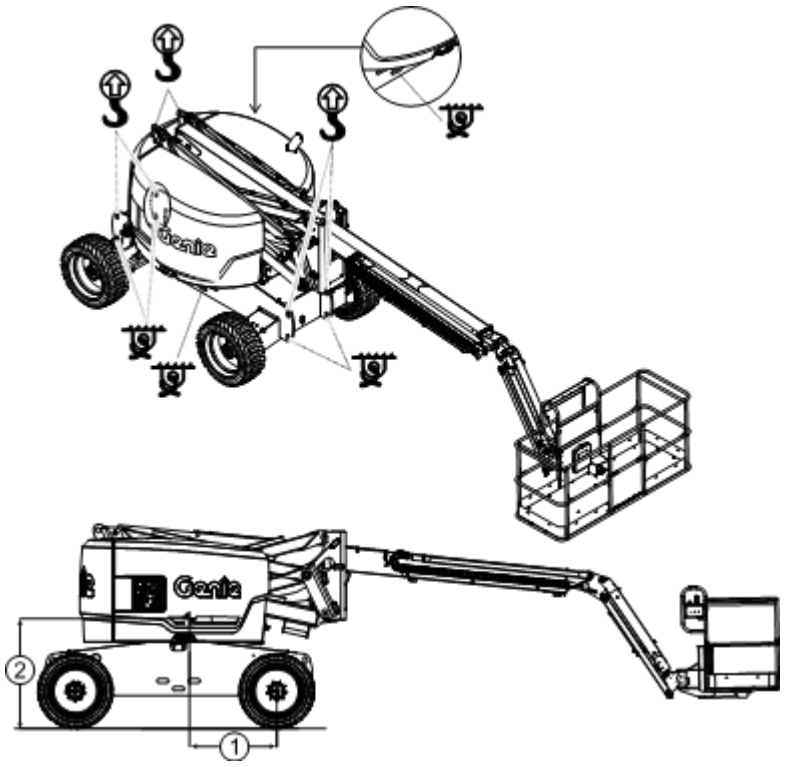

1 = X Axis

2 = Y Axis

Maintenance



Observe and Obey:

☑ Only routine maintenance items specified in this manual shall be performed by the operator.

☑ Scheduled maintenance inspections shall be performed by qualified service technicians, according to the manufacturer's specifications.

☑ Dispose of material in accordance with governmental regulations.

☑ Use only Genie approved replacement parts.

Maintenance Symbols Legend

The following symbols have been used in this manual to help communicate the intent of the instructions. When one or more of the symbols appear at the beginning of a maintenance procedure, it conveys the meaning below.



Indicates that tools will be required to perform this procedure.



Indicates that new parts will be required to perform this procedure.



Indicates that a cold engine is required before performing this procedure.

Check the Engine Oil Level



Maintaining the proper engine oil level is essential to good engine performance and service life. Operating the machine with an improper oil level can damage engine components.

Note: Check the oil level with the engine off.

1 Check the oil level dipstick. Add oil as needed.

Perkins 404D-22 Engine	
Oil type	15W-40
Oil type - cold conditions	5W-40
Perkins 404F-22T Engine	
Oil type	15W-40
Oil type - cold conditions	5W-40
Ford MSG-425 EFI Engine	
Oil type	5W-20
Deutz D2011 L03i Engine	
Oil type	15W-40
Oil type - cold conditions	5W-40
Deutz D2.9 L4 Engine	
Oil type	15W-40
Oil type - cold conditions	5W-40
Deutz TD 2.2 L3 Engine	
Oil type	15W-40
Oil type - cold conditions	5W-40
Deutz D436 Engine	
Oil type	15W-40
Oil type - cold conditions	5W-40
Weichai WP3.2 Engine	5W-40
Oil type	15W-40

Diesel Fuel Requirements

Satisfactory engine performance is dependent on the use of a good quality fuel. The use of a good quality fuel will give the following result: long engine life and acceptable exhaust emissions levels.

Minimum diesel fuel requirements for each engine are listed below.

Perkins 404D-22 Engine	
Fuel Type	Low Sulfur Diesel (LSD)
Perkins 404F-22T Engine	
Fuel Type	Ultra Low Sulfur Diesel (ULSD)
Deutz D2011 L03i Engine	
Fuel Type	Low Sulfur Diesel (LSD)
Deutz D2.9 L4 Engine	
Fuel Type	Ultra Low Sulfur Diesel (ULSD)
Deutz TD 2.2 L3 Engine	
Fuel Type	Ultra Low Sulfur Diesel (ULSD)
Deutz D436 Engine	
Fuel Type	Low Sulfur Diesel (LSD)
Weichai WP3.2 Engine	
Fuel Type	Low Sulfur Diesel (LSD)

Check the Hydraulic Oil Level

Maintaining the hydraulic oil at the proper level is essential to machine operation. Improper hydraulic oil levels can damage hydraulic components. Daily checks allow the inspector to identify changes in oil level that might indicate the presence of hydraulic system problems.

1 Be sure that the boom is in the stowed position.

2 Visually inspect the sight gauge located on the side of the hydraulic oil tank.

⊙ Result: The hydraulic oil level should be within the top 5 cm of the sight gauge.

3 Add oil as needed. Do not overfill.

Hydraulic oil specifications	
Hydraulic oil type	Chevron Rando HD equivalent

Maintenance

Check the Engine Coolant Level – Liquid Cooled Models



Maintaining the engine coolant at the proper level is essential to engine service life. Improper coolant level will affect the engine's cooling capability and damage engine components. Daily checks will allow the inspector to identify changes in coolant level that might indicate cooling system problems.

⚠ Burn hazard. Beware of hot engine parts and coolant. Contact with hot engine parts and/or coolant may cause severe burns.

⚠ Burn hazard. Do not remove the radiator cap if the engine has been running. Contact with pressurized coolant may cause severe burns. Allow engine to cool before removing the radiator cap.

1 Check the fluid level in the coolant recovery tank. Add fluid as needed.

⊙ Result: The fluid level should be at the FULL mark on the tank or visible in the sight gauge.

Check the Batteries



Proper battery condition is essential to good machine performance and operational safety. Improper fluid levels or damaged cables and connections can result in component damage and hazardous conditions.

⚠ Electrocution hazard. Contact with hot or live circuits may result in death or serious injury. Remove all rings, watches and other jewelry.

⚠ Bodily injury hazard. Batteries contain acid. Avoid spilling or contacting battery acid. Neutralize battery acid spills with baking soda and water.

1 Put on protective clothing and eye wear.

2 Be sure that the battery cable connections are tight and free of corrosion.

3 Be sure that the battery hold-down brackets are in place and secure.

Note: Adding terminal protectors and a corrosion preventative sealant will help eliminate the corrosion on the battery terminals and cables.

Check the Tire Pressure



⚠ Tip-over hazard. An over-inflated tire can explode which may compromise machine stability and cause the machine to tip over.

⚠ Tip-over hazard. The use of temporary flat tire repair products may lead to tire failure which could compromise machine stability and cause the machine to tip over.

⚠ Bodily injury hazard. An over-inflated tire can explode and may cause death or serious injury.

Note: This procedure does not need to be performed on machines equipped with foam-filled tires.

1 Check each tire with an air pressure gauge. Add air as needed.

Tire specifications	
Models with Aircraft Protection Package	Foam-filled Only
Rough terrain tire Tire size: 355/55 D625, 14 ply	70 psi/4.92 bar
High flotation tires Tire size: 41/18LL x 22.5, 14 ply	60 psi/4.13 bar

Scheduled Maintenance

Maintenance performed commissioning, quarterly, annually and every two years must be completed by a person trained and qualified to perform maintenance on this machine according to the procedures found in the service and maintenance manuals for this machine.

Machines that have been out of service for more than three months must receive the quarterly inspection before they are put back into service.

Obey all local and governmental regulations regarding the disposal and decommissioning of the machine at the end of its lifetime. Refer to the appropriate Genie service manual for additional information.

Specifications

Model		Z-62/40
Height, working maximum	67 ft 11 in	20.7 m
Height, platform maximum	61 ft 11 in	18.87 m
Height, stowed maximum	9 ft 6 in	2.9 m
Horizontal reach, maximum	40 ft 9 in	12.42 m
Width	8 ft 2 in	2.49 m
Length, stowed	24 ft 10 in	7.57 m
Maximum load capacity	500 lbs	227 kg
Maximum wind speed	28 mph	12.5 m/s
Wheelbase	8 ft 2 in	2.49 m
Ground clearance, center	15 in	41 cm
Ground clearance, axle	13 in	33 cm
Turning radius (outside)	18 ft 9 in	5.7 m
Turning radius (inside)	9 ft 2 in	2.8 m
Turntable rotation (degrees)		360° Continuous
Turntable tailswing	0	0
Platform dimensions, 1.8 m (length x width)	72 in x 30 in	183 x 76 cm
Platform dimensions, 2.4 m (length x width)	96 in x 36 in	244 x 91 cm
Platform leveling		self-leveling
Platform rotation		160°
Controls		12V DC proportional
AC outlet in platform		standard
Hydraulic pressure, maximum (boom functions)	3000 psi	206.8 bar
System voltage		12V
Tire size		355/55 D625, 14 ply
Weight	22,160 lbs	10,052 kg
(Machine weights vary with option configurations. See serial label for specific machine weight.)		
Ambient operating temperature		-20° F to 120° F -29° C to 49° C
Low end of temperature range requires the use of special hydraulic and engine oils.		
Fuel tank capacity, diesel	35 gallons	132.5 liters
Fuel tank capacity, gasoline	20 gallons	75.7 liters

Maximum slope rating, stowed position, 2WD		
Counterweight uphill	30%	17°
Counterweight downhill	10%	6°
Side slope	25%	14°
Maximum slope rating, stowed position, 4WD		
Counterweight uphill	45%	24°
Counterweight downhill	30%	17°
Side slope	25%	14°
Note: Slope rating is subject to ground conditions with one person in the platform and adequate traction. Additional platform weight may reduce slope rating.		
Maximum allowable chassis inclination	Refer to "Tilt Sensor Activation Settings" section	
Drive speeds		
Drive speed, stowed, 2WD	4.0 mph 40 ft/6.8 sec	6.4 km/h 12.2 m/6.8 sec
Drive speed, stowed, 4WD	3.0 mph 40 ft/9.1 sec	4.8 km/h 12.2 m/9.1 sec
Drive speed, stowed, 4WS	2.5 mph 40 ft/10.9 sec	4.0 km/h 12.2 m/10.9 sec
Drive speed, raised or extended	0.7 mph 40 ft/40 sec	1.0 km/h 12.2 m/40 sec
Airborne noise emissions		
Sound pressure level at ground workstation		<85 dBA
Sound pressure level at platform workstation		<74 dBA
Guaranteed sound power level		105 dBA
Total vibration value to which the hand/arm system is subjected does not exceed 2.5 m/s^2.		
Highest root mean square value of weighted acceleration to which the whole body is subjected does not exceed 0.5 m/s^2.		
Floor loading information		
Tire load maximum	12,500 lbs	5,670 kg
Tire contact pressure	70 psi	4.9 kg / cm^2 893 kPa
Occupied floor pressure	265 psf	1,293 kg / m^2 12.68 kPa
Note: Floor loading information is approximate and does not incorporate different option configurations. It should be used only with adequate safety factors.		
Continuous improvement of our products is a Genie policy. Product specifications are subject to change without notice or obligation.		

Specifications

Model		Z-62/40 TRAX
Height, working maximum	67 ft 11 in	20.7 m
Height, platform maximum	61 ft 11 in	18.87 m
Height, stowed maximum	9 ft 6 in	2.9 m
Horizontal reach, maximum	40 ft 9 in	12.42 m
Width	8 ft 5.7 in	2.58 m
Length, stowed	24 ft 10 in	7.57 m
Maximum load capacity	500 lbs	227 kg
Maximum wind speed	28 mph	12.5 m/s
Wheelbase	8 ft 2 in	2.49 m
Ground clearance, center	15 in	41 cm
Ground clearance, axle	13 in	33 cm
Turning radius (outside)	21 ft 4 in	6.5 m
Turning radius (inside)	11 ft 5 in	3.48 m
Turntable rotation (degrees)		360° Continuous
Turntable tailswing	0	0
Platform dimensions, 1.8 m (length x width)	72 in x 30 in	183 x 76 cm
Platform dimensions, 2.4 m (length x width)	96 in x 36 in	244 x 91 cm
Platform leveling		self-leveling
Platform rotation		160°
Controls		12V DC proportional
AC outlet in platform		standard
Hydraulic pressure, maximum (boom functions)	3,000 psi	206.8 bar
System voltage		12V
Weight	27,332 lbs	12,398 kg
(Machine weights vary with option configurations. See serial label for specific machine weight.)		
Ambient operating temperature		-20° F to 120° F -29° C to 49° C
Low end of temperature range requires the use of special hydraulic and engine oils.		
Fuel tank capacity, diesel	35 gallons	132.5 liters

Maximum slope rating, stowed position, 4WD		
Counterweight uphill	45%	24°
Counterweight downhill	30%	17°
Side slope	25%	14°
Note: Slope rating is subject to ground conditions with one person in the platform and adequate traction. Additional platform weight may reduce slope rating.		
Maximum allowable chassis inclination	Refer to "Tilt Sensor Activation Settings" section	
Drive speeds		
Drive speed, stowed, 4WD	2.3 mph 40 ft/11.8 sec	3.7 km/h 12.2 m/11.8 sec
Drive speed, raised or extended	0.7 mph 40 ft/40 sec	1.0 km/h 12.2 m/40 sec
Airborne noise emissions		
Sound pressure level at ground workstation		<85 dBA
Sound pressure level at platform workstation		<74 dBA
Guaranteed sound power level		105 dBA
Total vibration value to which the hand/arm system is subjected does not exceed 2.5 m/s^2.		
Highest root mean square value of weighted acceleration to which the whole body is subjected does not exceed 0.5 m/s^2.		
Floor loading information		
Track load maximum	13,125 lbs	5,953 kg
Track contact pressure	11 psi	0.77 kg/cm^2 75.8 kPa
Occupied floor pressure	247 psf	1,206 kg/m^2 11.83 kPa
Note: Floor loading information is approximate and does not incorporate different option configurations. It should be used only with adequate safety factors.		
Continuous improvement of our products is a Genie policy. Product specifications are subject to change without notice or obligation.		

Specifications

Z-62 Range of Motion Chart

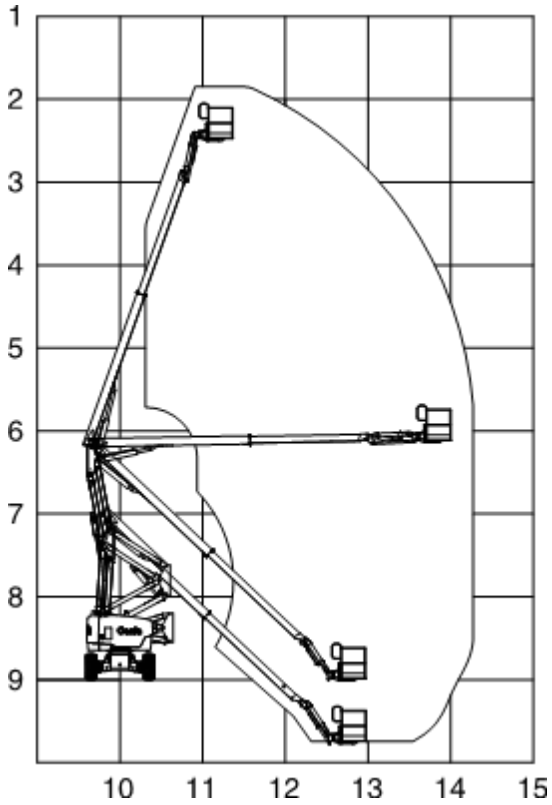

Max Height		
1	80 ft	24.4 m
2	70 ft	21.4 m
3	60 ft	18.3 m
4	50 ft	16.3 m
5	40 ft	12.2 m
6	30 ft	9.2 m
7	20 ft	6.1 m
8	10 ft	3.1 m
9	0 ft	0 m

Max Reach		
10	0 ft	0 m
11	10 ft	3.1 m
12	20 ft	6.1 m
13	30 ft	9.2 m
14	40 ft	12.2 m
15	50 ft	15.3 m

Specifications

Contents of EC Declaration of Conformity - 1

<Manufacturer's name> hereby declares that the machinery described below complies with the provisions of the following Directives:

1. EC Directive 2006/42/EC, Machinery Directive, under consideration of harmonized European standard EN280 as described in EC type-examination certificate <variable field> issued by:

<notified body's name>

<notified body's number>

2. EC Directive EMC: 2014/30/EU, under consideration of harmonized European standard EN 61000-6-2 and EN 61000-6-4

3. EC Directive 2000/14/EC, Noise Directive, under consideration of Annex V and harmonized standard EN ISO 3744, internal combustion engine only.

Test Report:
This machine has been tested and passed the following categories prior to entering the market:

1. BRAKES: Brakes working properly in forward and reverse.
2. OVERLOAD: Overload tested at XXX% rated load.
3. FUNCTIONAL: Smooth operation at XXX% rated load.
4. FUNCTIONAL: All safety devices working correctly.
5. FUNCTIONAL: Speeds set within permitted specification.

Model / Type: <machine type>	Manufacture Date: <variable field>
Description: <machine classification>	Country of Manufacture: <variable field>
Model: <model name>	Net Installed Power: <only for IC machines>
Serial Number: <variable field>	Guaranteed Sound Power Level: <only for IC machines>
VIN: <where applicable>	
Manufacturer: <Manufacturer's name>	Authorized Representative: Genie Industries B.V Boekerman 5, 4751 XK Oud Gastel, The Netherlands
Empowered signatory:	Place of Issue: <variable field> Date of Issue: <variable field>

Specifications

Contents of EC Declaration of Conformity - 2

<Manufacturer's name> hereby declares that the machinery described below complies with the provisions of the following Directives:

1. EC Directive 2006/42/EC, Machinery Directive, Conformity assessment procedure: art.12 (3) (a), with the application of European Harmonized Standard EN 280:2013+A1:2015.

2. EC Directive EMC: 2014/30/EU, under consideration of harmonized European standard EN 61000-6-2 and EN 61000-6-4

3. EC Directive 2000/14/EC, Noise Directive, under consideration of Annex V and harmonized standard EN ISO 3744, internal combustion engine only.

Test Report:
This machine has been tested and passed the following categories prior to entering the market:

1. BRAKES: Brakes working properly in forward and reverse.
2. OVERLOAD: Overload tested at XXX% rated load.
3. FUNCTIONAL: Smooth operation at XXX% rated load.
4. FUNCTIONAL: All safety devices working correctly.
5. FUNCTIONAL: Speeds set within permitted specification.

Model / Type: <machine type>	Manufacture Date: <variable field>
Description: <machine classification>	Country of Manufacture: <variable field>
Model: <model name>	Net Installed Power: <only for IC machines>
Serial Number: <variable field>	Guaranteed Sound Power Level: <only for IC machines>
VIN: <where applicable>	
Manufacturer: <Manufacturer's name>	Authorized Representative: Genie Industries B.V Boekerman 5, 4751 XK Oud Gastel, The Netherlands
Empowered signatory:	Place of Issue: <variable field> Date of Issue: <variable field>

Specifications

Contents of UK Declaration of Conformity - 1

<Manufacturer's name> hereby declares that the machinery described below complies with the provisions of the following Legislation:

1. Supply of Machinery (Safety) Regulations 2008 (SI 2008/1597) as amended (SI 2011/1043, SI 2011/2157, SI 2019/696) under consideration of designated standard EN280 as described in type-examination certificate <variable field> issued by:

<notified body's name>

<notified body's number>

2. Electromagnetic Compatibility Regulations 2016 (SI 2016/1091) as amended (SI 2017/1206, SI 2019/696) under consideration of designated standard EN 61000-6-2 and EN 61000-6-4

3. Noise Emissions in the Environment by Equipment for use Outdoors Regulations 2001 (SI 2001/1701) as amended (SI 2001/3958, SI 2005/3525, 2015/98) under consideration of Annex V and designated standard EN ISO 3744, internal combustion engine only.

Test Report:
This machine has been tested and passed the following categories prior to entering the market:

1. BRAKES: Brakes working properly in forward and reverse.
2. OVERLOAD: Overload tested at XXX% rated load.
3. FUNCTIONAL: Smooth operation at XXX% rated load.
4. FUNCTIONAL: All safety devices working correctly.
5. FUNCTIONAL: Speeds set within permitted specification.

Model / Type: <machine type>	Manufacture Date: <variable field>
Description: <machine classification>	Country of Manufacture: <variable field>
Model: <model name>	Net Installed Power: <only for IC machines>
Serial Number: <variable field>	Guaranteed Sound Power Level: <only for IC machines>
VIN: <where applicable>	
Manufacturer: <Manufacturer's name>	Authorized Representative: Genie UK Ltd The Maltings Wharf Road Grantham NG31 6BH
Empowered signatory:	Place of Issue: <variable field>
	Date of Issue: <variable field>

Specifications

Contents of UK Declaration of Conformity - 2

<Manufacturer's name> hereby declares that the machinery described below complies with the provisions of the following Legislation:

1. Supply of Machinery (Safety) Regulations 2008 (SI 2008/1597) as amended (SI 2011/1043, SI 2011/2157, SI 2019/696) conformity assessment procedure according to Part 3, 11. (2) (a) with reference to designated standard EN 280:2013+A1:2015

2. Electromagnetic Compatibility Regulations 2016 (SI 2016/1091) as amended (SI 2017/1206, SI 2019/696) under consideration of designated standard EN 61000-6-2 and EN 61000-6-4

3. Noise Emissions in the Environment by Equipment for use Outdoors Regulations 2001 (SI 2001/1701) as amended (SI 2001/3958, SI 2005/3525, 2015/98) under consideration of Annex V and designated standard EN ISO 3744, internal combustion engine only.

Test Report:
This machine has been tested and passed the following categories prior to entering the market:

1. BRAKES: Brakes working properly in forward and reverse.
2. OVERLOAD: Overload tested at XXX% rated load.
3. FUNCTIONAL: Smooth operation at XXX% rated load.
4. FUNCTIONAL: All safety devices working correctly.
5. FUNCTIONAL: Speeds set within permitted specification.

Model / Type: <machine type>	Manufacture Date: <variable field>
Description: <machine classification>	Country of Manufacture: <variable field>
Model: <model name>	Net Installed Power: <only for IC machines>
Serial Number: <variable field>	Guaranteed Sound Power Level: <only for IC machines>
VIN: <where applicable>	
Manufacturer: <Manufacturer's name>	Authorized Representative: Genie UK Ltd The Maltings Wharf Road Grantham NG31 6BH
Empowered signatory:	Place of Issue: <variable field>
	Date of Issue: <variable field>

Distributed By:

www.genielift.com