Genie®
A TEREX BRAND

Operator's Manual

S-60X

ANSI/CSA
North America
South America
Asia

with
Maintenance
Information

Second Edition
First Printing
Part No. 1261735

Contents

Introduction 1
Symbol and Hazard Pictorials Definitions 4
General Safety 6
Personal Safety 12
Work Area Safety 13
Legend 21
Controls 22
Inspections 30
Operating Instructions 44
Towing Instructions 57
Transport and Lifting Instructions 58
Maintenance 61
Specifications 65

Copyright © 2010 by Terex Corporation

Second Edition: First Printing, January 2015

Genie and "S" are registered trademarks of Terex South Dakota, Inc. in the U.S.A. and many other countries.

These machines comply with
ANSI/SIA A92.5
CAN B.354.4

Introduction

About this manual

Genie appreciates your choice of our machine for your application. Our number one priority is user safety, which is best achieved by our joint efforts. This book is an operation and daily maintenance manual for the user or operator of a Genie machine.

This manual should be considered a permanent part of your machine and should remain with the machine at all times. If you have any questions, contact Genie.

Sequence number stamped on chassis

Serial label located under cover

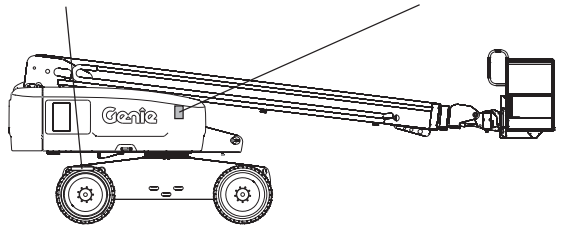

Intended Use

This machine is intended to be used only to lift personnel, along with their tools and materials to an aerial work site.

Bulletin Distribution and Compliance

Safety of product users is of paramount importance to Genie. Various bulletins are used by Genie to communicate important safety and product information to dealers and machine owners.

The information contained in the bulletins is tied to specific machines using the machine model and serial number.

Distribution of bulletins is based on the most current owner on record along with their associated dealer, so it is important to register your machine and keep your contact information up to date.

To ensure safety of personnel and the reliable continued operation of your machine, be sure to comply with the action indicated in a respective bulletin.

Introduction

Contacting the Manufacturer

At times it may be necessary to contact Genie. When you do, be ready to supply the model number and serial number of your machine, along with your name and contact information. At minimum, Genie should be contacted for:

Accident reporting

Questions regarding product applications and safety

Standards and regulatory compliance information

Current owner updates, such as changes in machine ownership or changes in your contact information. See Transfer of Ownership, below.

Transfer of Machine Ownership

Taking a few minutes to update owner information will ensure that you receive important safety, maintenance and operating information that applies to your machine.

Please register your machine by visiting us on the web at www.genielift.com or by calling us toll free at 1-800-536-1800.



Danger

Failure to obey the instructions and safety rules in this manual will result in death or serious injury.

Do Not Operate Unless:

☑ You learn and practice the principles of safe machine operation contained in this operator's manual.

1 Avoid hazardous situations.

Know and understand the safety rules before going on to the next section.

2 Always perform a pre-operation inspection.

3 Always perform function tests prior to use.

4 Inspect the workplace.

5 Only use the machine as it was intended.

☑ You read, understand and obey the manufacturer's instructions and safety rules—safety and operator's manuals and machine decals.

☑ You read, understand and obey employer's safety rules and worksite regulations.

☑ You read, understand and obey all applicable governmental regulations.

☑ You are properly trained to safely operate the machine.

Introduction

Safety Sign Maintenance

Replace any missing or damaged safety signs. Keep operator safety in mind at all times. Use mild soap and water to clean safety signs. Do not use solvent-based cleaners because they may damage the safety sign material.

Hazard Classification

Decals on this machine use symbols, color coding and signal words to identify the following:



Safety alert symbol—used to alert you to potential personal injury hazards. Obey all safety messages that follow this symbol to avoid possible injury or death.

⚠ DANGER Indicates a hazardous situation which, if not avoided, will result in death or serious injury.

⚠ WARNING Indicates a hazardous situation which, if not avoided, could result in death or serious injury.

⚠ CAUTION Indicates a hazardous situation which, if not avoided, could result in minor or moderate injury.

NOTICE Indicates a property damage message.

Symbol and Hazard Pictorials Definitions

 Fire hazard	 Explosion hazard	 Explosion hazard	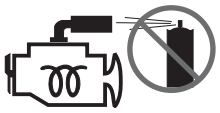 Do not use ether or other high energy starting aids on machines equipped with glow plugs	 No smoking. No flame. Stop engine.
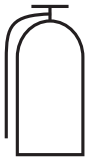 Fire extinguisher	 No smoking	 Explosion hazard	 Electrocution hazard	 Maintain required clearance
 Tip-over hazard	 Tip-over hazard	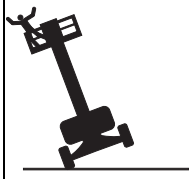 Tip-over hazard	 Tip-over hazard	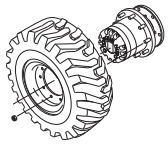 Replace tires with tires of same specification.
 Wheel load	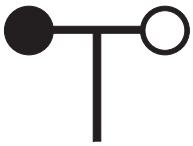 Wind speed	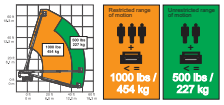 Maximum capacity	 Side force	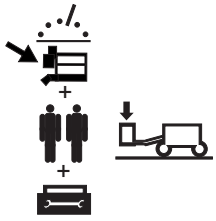 Weight of welder reduces capacity

Symbol and Hazard Pictorials Definitions

 Tie-down point	 Lifting point	 Read the service manual	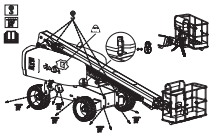 Lifting & tie down instructions	 Lanyard anchorage points
 Corrosive acid.	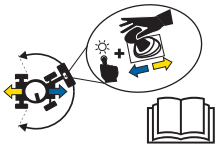 Color Coded Direction Arrows	 Runaway Hazard	 Collision hazard	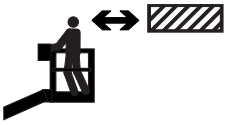 Collision hazard
 Electrocution hazard	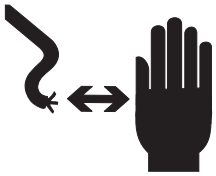 Avoid contact	 Disconnect battery	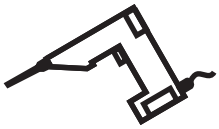 Voltage rating for power to platform	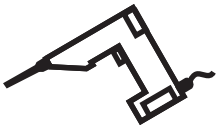 Pressure rating for air line to platform
Recovery procedure if tilt alarm sounds while elevated. 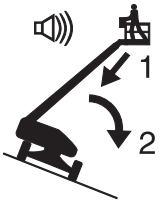 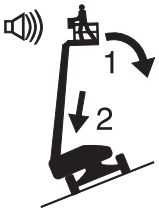 Platform downhill: 1 Retract boom. 2 Lower boom. Platform uphill: 1 Lower boom. 2 Retract boom.		 Read the operator's manual		

General Safety

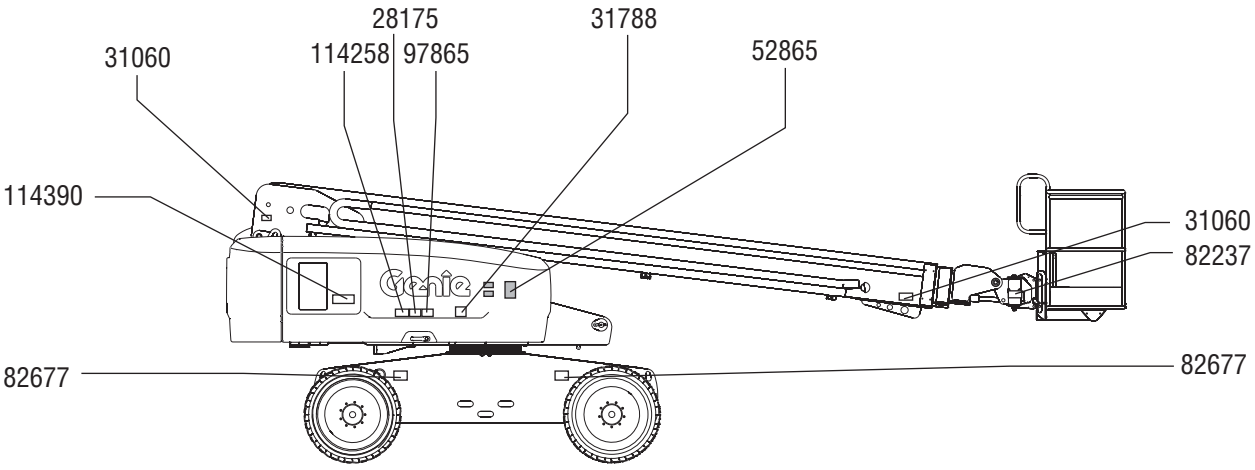

82677

⚠ DANGER

Tip-over Hazard

Failure to replace tires with tires of same specification will result in death or serious injury.

Tires are critical to machine stability.

Do not replace factory-installed tires with high flotation tires.

Only replace factory-installed tires with tires of same specification and ply rating. Tire Size355/55 D625, 14 ply

Tire Pressure:
70 psi / 4.92 bar

Lug Nut Torque:
Dry bolts:
170 ft-lbs /
225 Nm
Lubricated bolts:
130 ft-lbs /
176 Nm

82677 C

97865

⚠ WARNING

Electrocution/Burn Hazard
Failure to disconnect all the batteries before performing service on this machine may result in death or serious injury.

Disconnect all the batteries before performing service on this machine.

97865 B

31788

⚠ DANGER

Explosion / Burn Hazard
Ignition of explosive gases or contact with corrosive acid will cause death, burns or blindness

Keep all open flames and sparks away. Wear personal protective equipment, including face shield, gloves and long sleeve shirt.

READ MANUALS
Read all manuals prior to operation.

DO NOT OPERATE equipment if you do not understand the information in the manuals.

Consult your supervisor, the owner or the manufacturer.

31788 C

82237

⚠ DANGER

Electrocution Hazard
Contact with energized components can result in death or serious injury.

Avoid contact with energized components.

82237 B

114390

⚠ DANGER



Electrocution Hazard
Death or injury can result from contacting electric power lines.

Always contact the electric power line owner. The electric power shall be disconnected or the power lines moved or insulated before machine operations begin.

114390 A

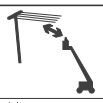

Maintain required clearance.

Line Voltage	Required Clearance	
0 to 50KV	10 ft	3.0 m
50 to 200KV	15 ft	4.6 m
200 to 350KV	20 ft	6.1 m
350 to 500KV	25 ft	7.6 m
500 to 750KV	35 ft	10.6 m
750 to 1000KV	45 ft	13.7 m

28175

⚠ WARNING



Compartment access is restricted.

Contact with components under any cover may result in serious injury.

28175 G



Only trained maintenance personnel should access compartments. Access by operator is only advised when performing Pre-operation Inspection. All compartments must remain closed and secured during operation.

114258

⚠ DANGER





Burn Hazard
Fuel and fumes can explode and burn.

No smoking. No flame. Stop engine.

114258 A

31060

⚠ DANGER



Tip-over Hazard
Altering or disabling limit switches can result in machine tip-over.
Machine tip-over will result in death or serious injury.

Do not alter or disable limit switch(s).

31060 B

52865

⚠ WARNING

Annual Inspection Record
Failure to complete required inspections could result in death or serious injury.

Scheduled maintenance inspections must be completed as specified in the appropriate service manual.

Use this decal to record the date of the annual inspection, the initials of the inspector and the machine owner.

Use the maintenance inspection report in the service manual for required inspections. Keep all completed records on all inspections for four years.

Maintenance inspections must be completed by a person trained and qualified on the maintenance of this machine.

52865 B

Model										Serial number									
Date of Inspection																			
Inspected by																			
Machine Owner																			

General Safety

114390

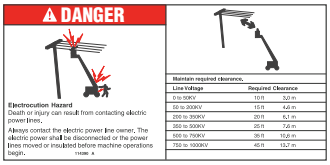

218559

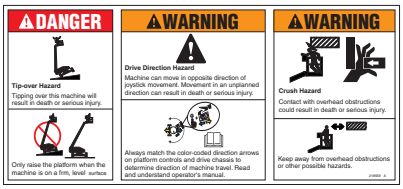

1261737

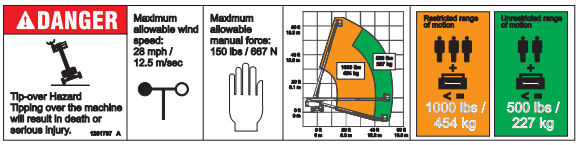

114416

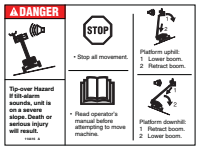

28236

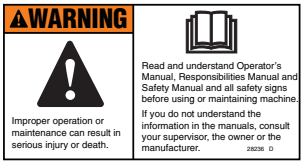

97579

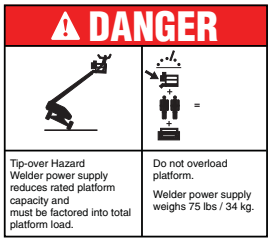

82862



1262342



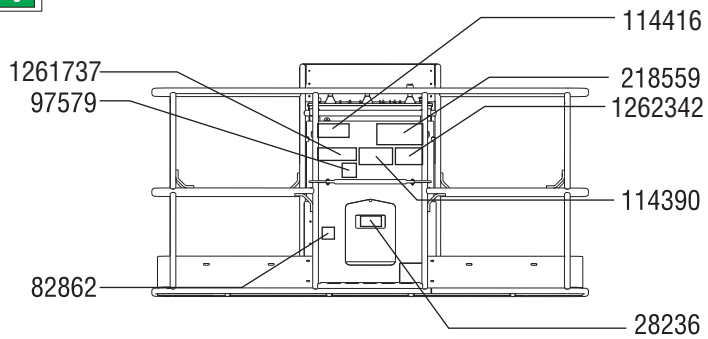

General Safety

82677

DANGER

Tip-over Hazard

Failure to replace tires with tires of same specification will result in death or serious injury.

Tires are critical to machine stability.

Do not replace factory-installed tires with high flotation tires.

Only replace factory-installed tires with tires of same specification and ply rating. Tire Size355/55 D625, 14 ply

Tire Pressure:
70 psi / 4.92 bar

Lug Nut Torque:
Dry bolts:
170 ft-lbs /
225 Nm
Lubricated bolts:
130 ft-lbs /
176 Nm

82677 C

97865

WARNING

Electrocution/Burn Hazard Failure to disconnect all the batteries before performing service on this machine may result in death or serious injury.

Disconnect all the batteries before performing service on this machine.

97865 B

31788

DANGER

Explosion / Burn Hazard
Ignition of explosive gases or contact with corrosive acid will cause death, burns or blindness

Keep all open flames and sparks away. Wear personal protective equipment, including face shield, gloves and long sleeve shirt.

READ MANUALS
Read all manuals prior to operation.

DO NOT OPERATE equipment if you do not understand the information in the manuals.

Consult your supervisor, the owner or the manufacturer.

31788 C

82237

DANGER

Electrocution Hazard Contact with energized components can result in death or serious injury.

Avoid contact with energized components.

82237 B

114390

DANGER

Electrocution Hazard
Death or injury can result from contacting electric power lines.

Always contact the electric power line owner. The electric power shall be disconnected or the power lines moved or insulated before machine operations begin.

114390 A

Maintain required clearance.

Line Voltage	Required Clearance	
0 to 50KV	10 ft	3,0 m
50 to 200KV	15 ft	4,6 m
200 to 350KV	20 ft	6,1 m
350 to 500KV	25 ft	7,6 m
500 to 750KV	35 ft	10,6 m
750 to 1000KV	45 ft	13,7 m

28175

WARNING

Compartment access is restricted.

Contact with components under any cover may result in serious injury.

28175 G

Only trained maintenance personnel should access compartments. Access by operator is only advised when performing Pre-operation Inspection. All compartments must remain closed and secured during operation.

114258

DANGER

Burn Hazard
Fuel and fumes can explode and burn.

No smoking. No flame. Stop engine.

114258 A

31060

DANGER

Tip-over Hazard
Altering or disabling limit switches can result in machine tip-over. Machine tip-over will result in death or serious injury.

Do not alter or disable limit switch(s).

31060 B

97602

WARNING

Explosion Hazard
Death or serious injury can result from the use of ether or other high energy starting aids.

Do not use ether or other high energy starting aids on machines equipped with glow plugs.

97602 B

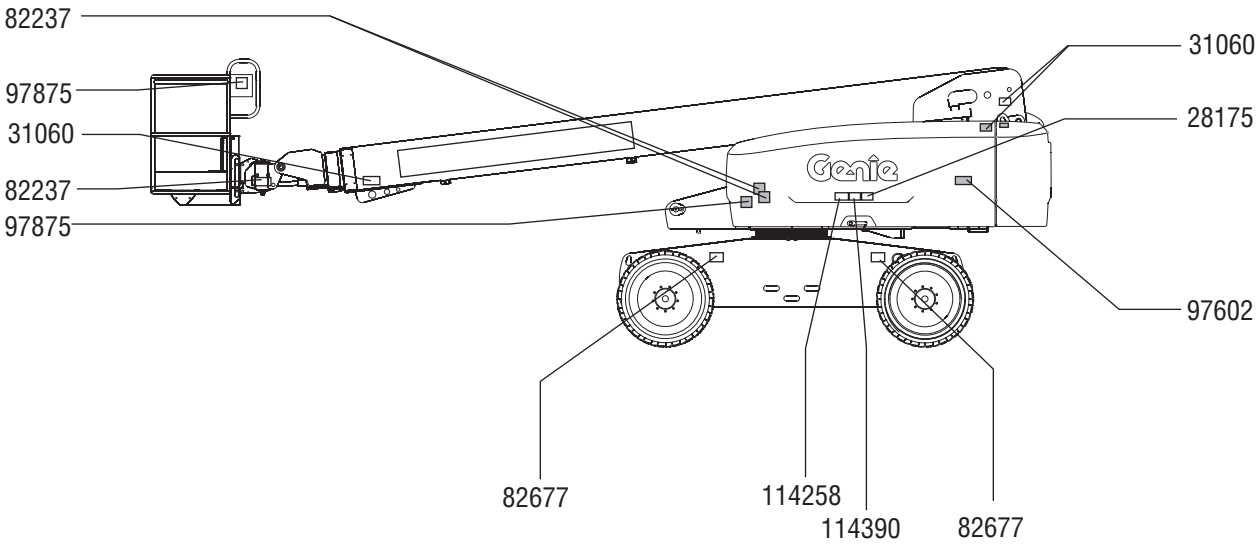

General Safety

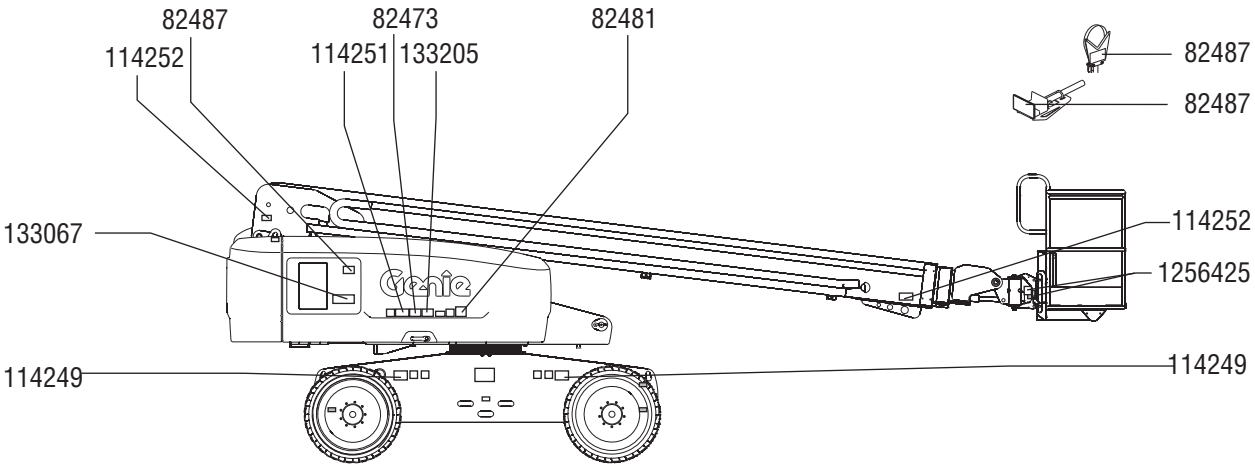

114249

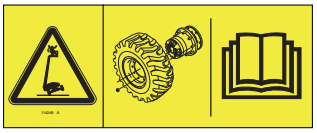

114252



82487



114251



133067



82473

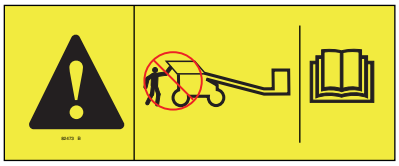

133205



82481



1256425



General Safety

82487



114473

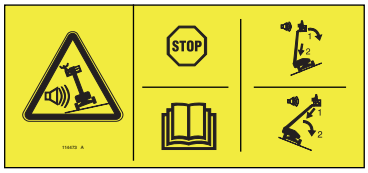

133067



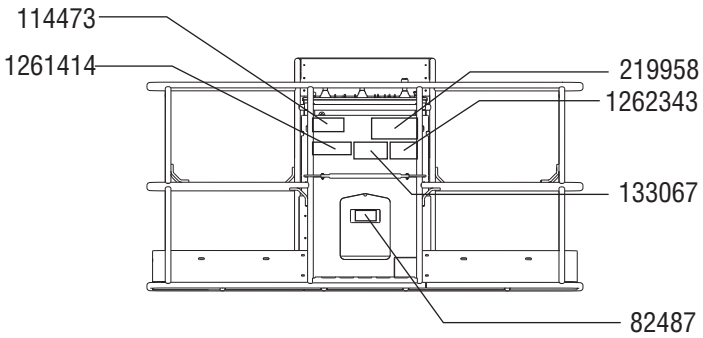

1262343



219958



1261414

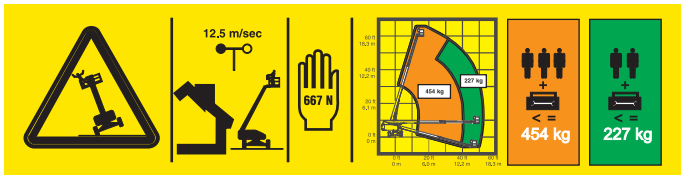

General Safety

114249

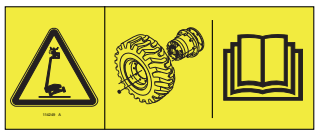

114252



82487



114251



1256425



133067



82473

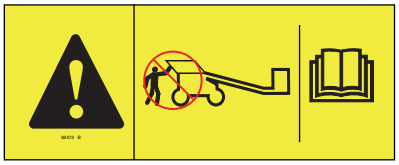

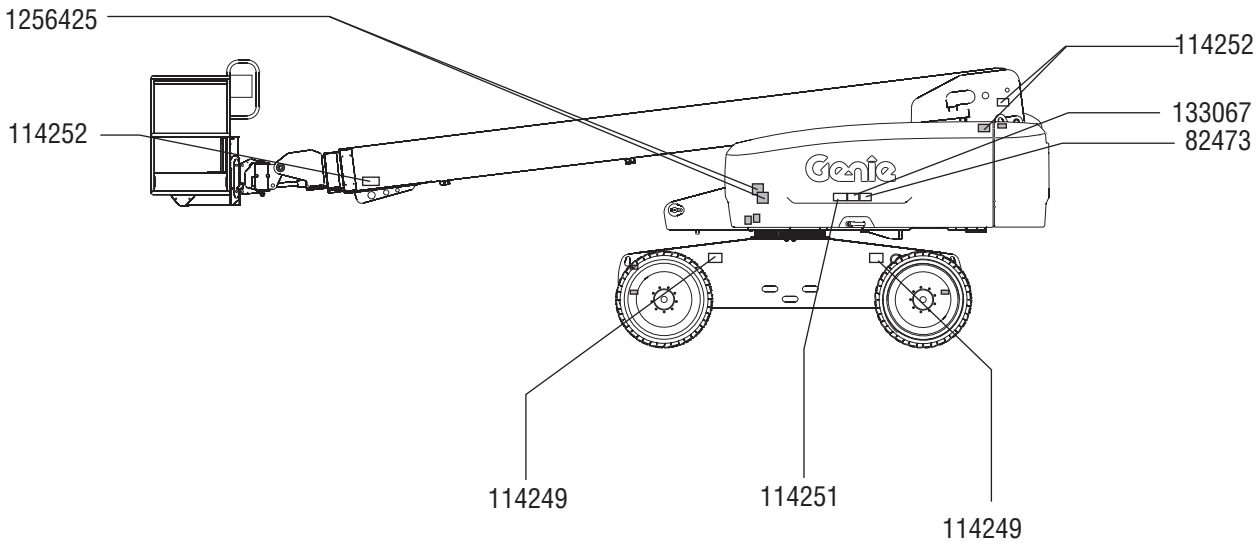

Personal Safety

Personal Fall Protection

Personal fall protection equipment (PFPE) is required when operating this machine.

Occupants must wear a safety belt or harness in accordance with governmental regulations. Attach the lanyard to the anchor provided in the platform.

Operators must comply with employer, job site and governmental rules regarding the use of personal protective equipment.

All PFPE must comply with applicable governmental regulations, and must be inspected and used in accordance with the PFPE manufacturer’s instructions.

Work Area Safety

⚠ Electrocution Hazards

This machine is not electrically insulated and will not provide protection from contact with or proximity to electrical current.



Obey all local and governmental regulations regarding required clearance from electrical power lines. At a minimum, the required clearance contained in the chart below must be followed.

Line Voltage	Required Clearance	
0 to 50KV	10 ft	3.05 m
50 to 200KV	15 ft	4.60 m
200 to 350KV	20 ft	6.10 m
350 to 500KV	25 ft	7.62 m
500 to 750KV	35 ft	10.67 m
750 to 1000KV	45 ft	13.72 m

Allow for platform movement, electrical line sway or sag, and beware of strong or gusty winds.

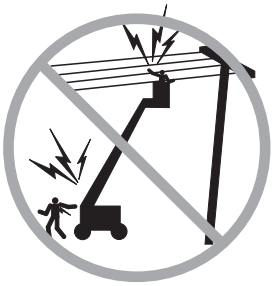

Keep away from the machine if it contacts energized power lines. Personnel on the ground or in the platform must not touch or operate the machine until energized power lines are shut off.

Do not operate the machine during lightning or storms.

Do not use the machine as a ground for welding.

⚠ Tip-over Hazards

Occupants, equipment and materials shall not exceed the maximum platform capacity for the restricted or unrestricted range of motion.

Maximum platform capacity Unrestricted range of motion	500 lbs	227 kg
Maximum occupants		2
Maximum platform capacity Restricted range of motion	1000 lbs	454 kg
Maximum occupants		3

If the restricted range of motion is selected for the maximum platform capacity, do not move the platform into the unrestricted range of motion zone.

Do not exceed the selected maximum platform capacity.

Do not attach a platform rated at 500 lbs / 227 kg (unrestricted range of motion) or 1000 lbs / 454 kg (restricted range of motion) to machines with any other rated load. See the serial label for the maximum rated load.

The weight of options and accessories, such as pipe cradles, panel cradles and welders, will reduce the rated platform capacity and must be subtracted from the platform capacity. See the decals with the options and accessories.

If using accessories, read, understand and obey the decals, instructions and manuals with the accessory.

Work Area Safety



Do not raise or extend the boom unless the machine is on a firm, level surface.



Do not depend on the tilt alarm as a level indicator. The tilt alarm sounds in the platform only when the machine is on a severe slope.

If the tilt alarm sounds when the platform is raised, use extreme caution. Identify the condition of the boom on the slope as shown below. Follow the steps to lower the boom before moving to a firm, level surface. Do not rotate the boom while lowering.

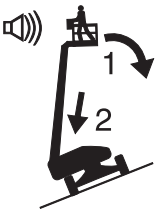

If the tilt alarm sounds with the platform uphill:

1 Lower the boom.

2 Retract the boom.

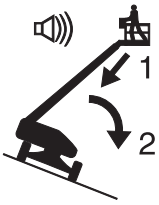

If the tilt alarm sounds with the platform downhill:

1 Retract the boom.

2 Lower the boom.



Do not raise the boom when wind speeds may exceed 28 mph / 12.5 m/s. If wind speeds exceed 28 mph / 12.5 m/s when the boom is raised, lower the boom and do not continue to operate the machine.

Do not operate the machine in strong or gusty winds. Do not increase the surface area of the platform or the load. Increasing the area exposed to the wind will decrease machine stability.



Use extreme care and slow speeds while driving the machine in the stowed position across uneven terrain, debris, unstable or slippery surfaces and near holes and drop-offs.

Do not drive the machine on or near uneven terrain, unstable surfaces or other hazardous conditions with the boom raised or extended.

Do not use the machine as a crane.

Do not push the machine or other objects with the boom.

Do not contact adjacent structures with the boom.

Do not tie the boom or platform to adjacent structures.

Do not place loads outside the platform perimeter.

Work Area Safety

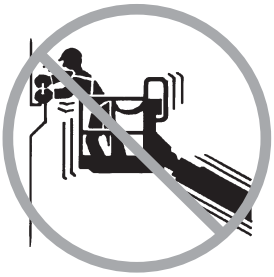

Do not push off or pull toward any object outside of the platform.

Maximum allowable side force – ANSI & CSA 150 lbs / 667 N

Do not alter or disable machine components that in any way affect safety and stability.

Do not replace items critical to machine stability with items of different weight or specification.

Do not replace factory-installed tires with tires of different specification or ply rating.

Do not modify or alter an aerial work platform without prior written permission from the manufacturer. Mounting attachments for holding tools or other materials onto the platform, toeboards or guard rail system can increase the weight in the platform and the surface area of the platform or the load.



Do not place or attach fixed or overhanging loads to any part of this machine.



Do not place ladders or scaffolds in the platform or against any part of this machine.

Do not transport tools and materials unless they are evenly distributed and can be safely handled by person(s) in the platform.

Do not use the machine on a moving or mobile surface or vehicle.

Be sure all tires are in good condition, air-filled tires are properly inflated and lug nuts are properly tightened.

Do not use the platform controls to free a platform that is caught, snagged or otherwise prevented from normal motion by an adjacent structure. All personnel must be removed from the platform before attempting to free the platform using the ground controls.

⚠ Operation on Slopes Hazards

Do not drive the machine on a slope that exceeds the maximum uphill, downhill or side slope rating of the machine. Slope rating applies only to machines in the stowed position.

Maximum slope rating, stowed position, 2WD		
Platform downhill	30%	(17°)
Platform uphill	10%	(6°)
Side slope	25%	(14°)
Maximum slope rating, stowed position, 4WD		
Platform downhill	45%	(24°)
Platform uphill	30%	(17°)
Side slope	25%	(14°)

Note: Slope rating is subject to ground conditions and adequate traction. See Driving on a Slope in the Operating Instructions section.

Work Area Safety

⚠ Fall Hazards

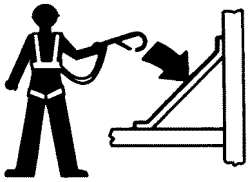

Occupants must wear a safety belt or harness in accordance with governmental regulations. Attach the lanyard to the anchor provided in the platform.



Do not sit, stand or climb on the platform guard rails. Maintain a firm footing on the platform floor at all times.



Do not climb down from the platform when raised.

Keep the platform floor clear of debris.

Lower the platform entry mid-rail or close the entry gate before operating.

Do not enter or exit the platform unless the machine is in the stowed position and the platform is at ground level.

⚠ Collision Hazards

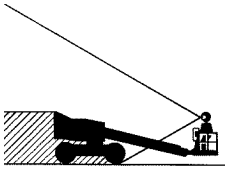

Be aware of limited sight distance and blind spots when driving or operating.

Be aware of the boom position and tailswing when rotating the turntable.



Check the work area for overhead obstructions or other possible hazards.



Be aware of crushing hazards when grasping the platform guard rail.

Operators must comply with employer, job site and governmental rules regarding use of personal protective equipment.

Work Area Safety

Observe and use the color-coded direction arrows on the platform controls and drive chassis for drive and steer functions.



Do not lower the boom unless the area below is clear of personnel and obstructions.



Limit travel speed according to the condition of the ground surface, congestion, slope, location of personnel, and any other factors which may cause collision.

Do not operate a boom in the path of any crane unless the controls of the crane have been locked out and/or precautions have been taken to prevent any potential collision.

No stunt driving or horseplay while operating a machine.

⚠ Bodily Injury Hazard

Always operate the machine in a well-ventilated area to avoid carbon monoxide poisoning.

Do not operate the machine with a hydraulic oil or air leak. An air leak or hydraulic leak can penetrate and/or burn skin.

Improper contact with components under any cover will cause serious injury. Only trained maintenance personnel should access compartments. Access by the operator is only advised when performing a pre-operation inspection. All compartments must remain closed and secured during operation.

⚠ Explosion and Fire Hazards

Do not start the engine if you smell or detect liquid petroleum gas (LPG), gasoline, diesel fuel or other explosive substances.

Do not refuel the machine with the engine running.

Refuel the machine and charge the battery only in an open, well-ventilated area away from sparks, flames and lighted tobacco.

Do not operate the machine or charge the battery in hazardous locations or locations where potentially flammable or explosive gases or particles may be present.

Do not spray ether into engines equipped with glow plugs.

Work Area Safety

⚠ Damaged Machine Hazards

Do not use a damaged or malfunctioning machine.

Conduct a thorough pre-operation inspection of the machine and test all functions before each work shift. Immediately tag and remove from service a damaged or malfunctioning machine.

Be sure all maintenance has been performed as specified in this manual and the appropriate Genie service manual.

Be sure all decals are in place and legible.

Be sure the operator's, safety and responsibilities manuals are complete, legible and in the storage container located on the machine.

⚠ Component Damage Hazards

Do not use any battery or charger greater than 12V to jump-start the engine.

Do not use the machine as a ground for welding.

⚠ Battery Safety

Burn Hazards



Batteries contain acid. Always wear protective clothing and eye wear when working with batteries.

Avoid spilling or contacting battery acid. Neutralize battery acid spills with baking soda and water.

Explosion Hazards

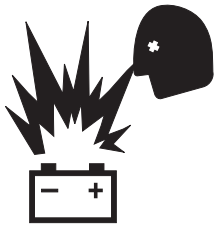

Keep sparks, flames and lighted tobacco away from batteries. Batteries emit explosive gas.





⚠ Electrocution Hazard

Avoid contact with electrical terminals.

Work Area Safety

⚠ Welder Safety

Read, understand and obey all warnings and instructions provided with the welding power unit.

Do not connect weld leads or cables unless the welding power unit is turned off at the platform controls.

Do not operate unless the weld cables are properly connected and the welder is properly grounded.

The weight of the welder will reduce the rated platform capacity and must be factored into the total platform load. The welder power supply weighs 75 lbs / 34 kg.

Do not operate the welder unless a fire extinguisher is immediately available for instant use, per OSHA regulation 1926.352(d).

⚠ Weld Line to Platform Safety

Read, understand and obey all warnings and instructions provided with the welding power unit.

Do not connect weld leads or cables unless the welding power unit is turned off at the platform controls.

Do not operate unless the weld cables are properly connected.

Connect the positive lead to the twist-lock connector at the turntable and platform.

Clamp the negative lead to the ground post at the turntable and platform.

⚠ Pipe Cradle Safety

Read, understand and obey all warnings and instructions provided with the pipe cradles.

Do not exceed the rated platform capacity. The pipe cradle assembly and the weight in the pipe cradles will reduce rated platform capacity and must be factored into total platform load.

The pipe cradle assembly weighs 21 lbs / 9.5 kg.

The maximum capacity of the pipe cradle assembly is 200 lbs / 91 kg.

The weight of the pipe cradle assembly and the load in the pipe cradles may limit the maximum number of occupants in platform.

Center the load within the perimeter of the platform.

Secure the load to the platform.

Do not obstruct the entrance or the exit of the platform.

Do not obstruct the ability to operate the platform controls or the red Emergency Stop button.

Do not operate unless you are adequately instructed and are aware of all of the hazards associated with movement of the platform with an overhanging load.

Do not cause a horizontal force or side load to machine by raising or lowering a fixed or overhanging load.

Electrocution Hazard: Keep pipes away from all energized electrical conductors.

Work Area Safety

⚠ Panel Cradle Safety

Read, understand and obey all warnings and instructions provided with the panel cradles.

Do not exceed the rated platform capacity. The combined weight of the cradles, panels, occupants, tools and any other equipment must not exceed rated capacity.

The panel cradle assembly weighs 30 lbs / 13.6 kg.

The maximum capacity of the panel cradles is 250 lbs / 113 kg.

The weight of the panel cradles and the load in the panel cradles may limit the maximum number of occupants in platform to one person.

Secure the cradles to the platform. Secure the panel(s) to the platform railing using the straps provided.

Do not operate unless you are adequately instructed and are aware of all hazards associated with lifting panels.

Do not cause a horizontal force or side load to machine by raising or lowering a fixed or overhanging load.

Maximum vertical height of panels: 4 ft / 1.2 m

Maximum wind speed: 15 mph / 6.7 m/sec

Maximum panel area: 32 sq ft / 3 m^2

Tow Package Safety

Read, understand and obey all warnings and instructions provided with the tow package.

When vehicle is in free-wheel configuration, there are no brakes and machine may move, resulting in death, serious injury or property damage.

Do not exceed maximum towing speed, or maximum towing time.

Maximum tow speed	8 mph / 12.87 km/h
Maximum towing time at 8 mph / 13 km/h	30 minutes
Maximum towing time at 6 mph / 10 km/h	60 minutes

Lockout After Each Use

1 Select a safe parking location—firm level surface, clear of obstruction and traffic.

2 Retract and lower the boom to the stowed position.

3 Rotate the turntable so that the boom is between the non-steer wheels.

4 Turn the key switch to the off position and remove the key to secure from unauthorized use.

Legend

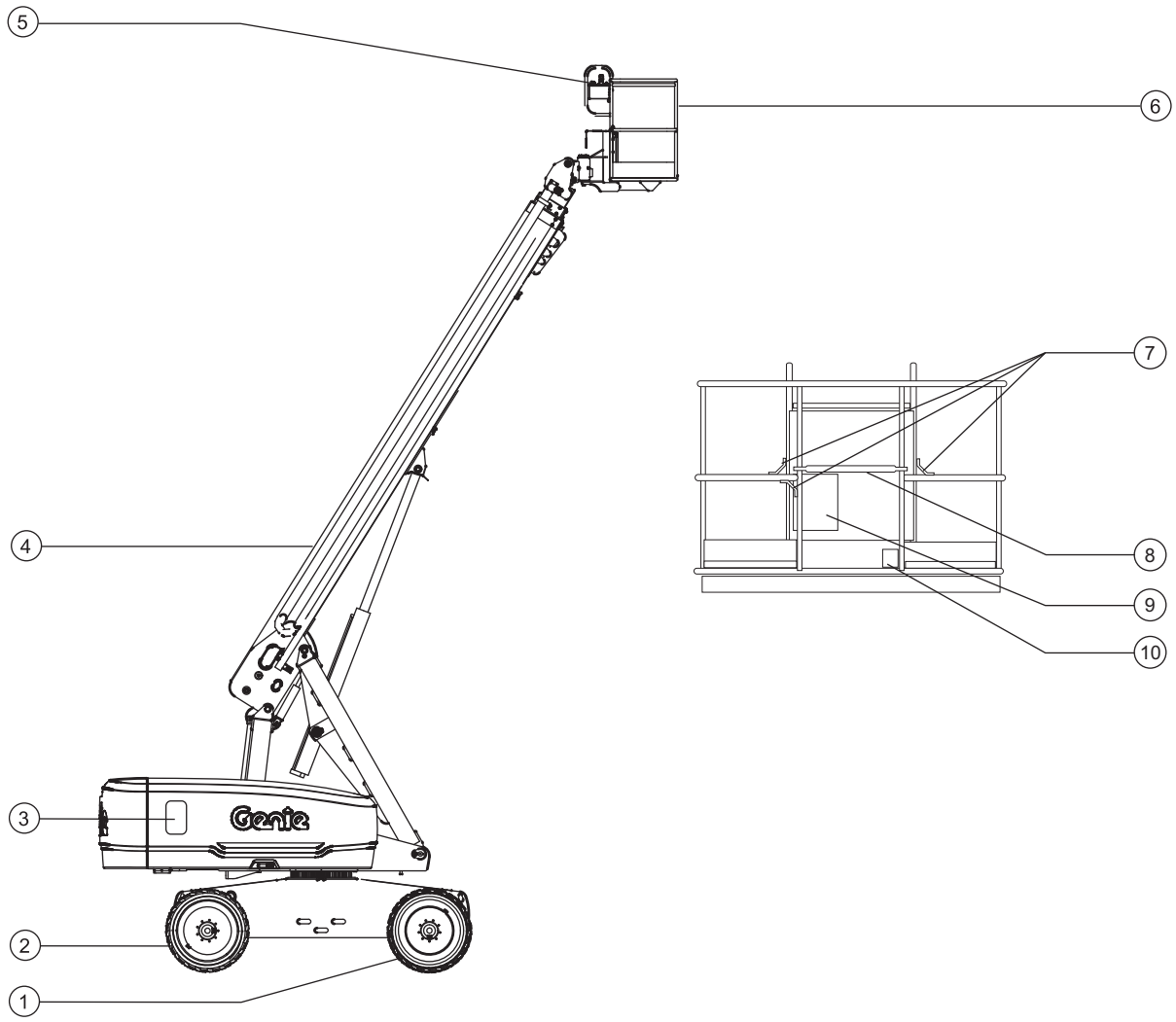

1 Non-steer tire
2 Steer tire
3 Ground controls
4 Boom
5 Platform controls
6 Platform
7 Lanyard anchorage points
8 Sliding mid-rail
9 Manual storage container
10 Foot switch

Controls

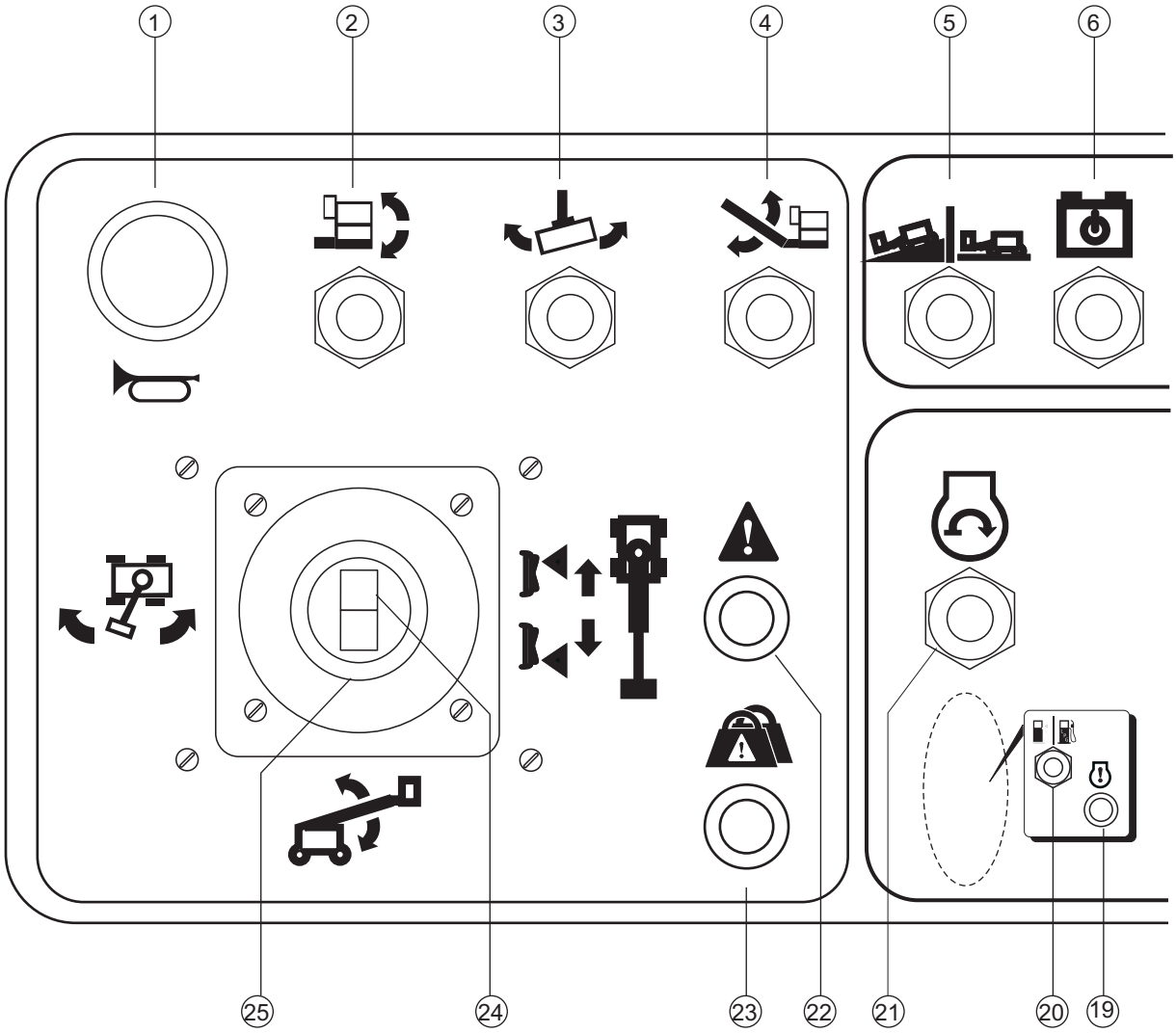

Controls

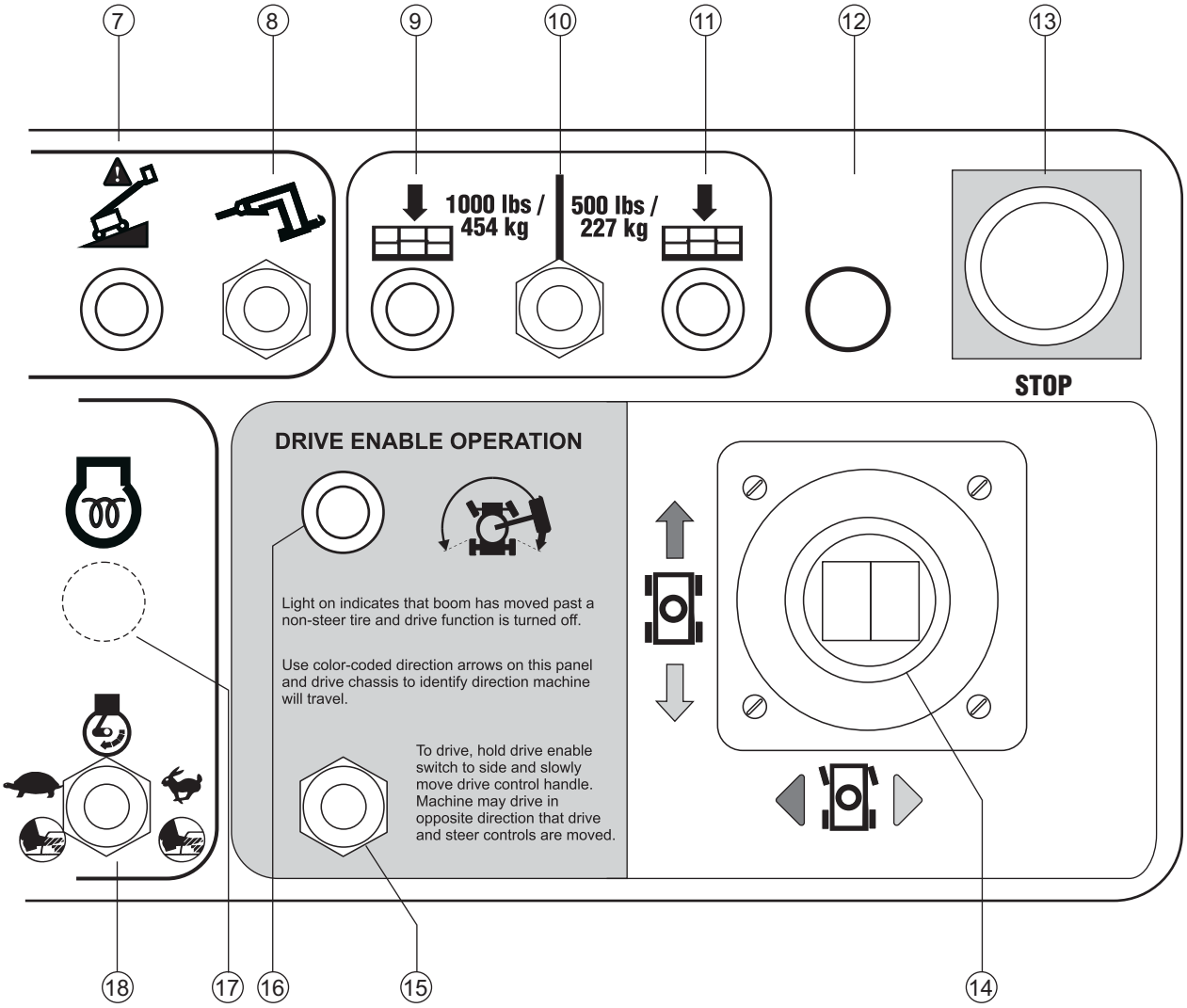
7
8
9
10
11
12
13
1000 lbs / 454 kg
500 lbs / 227 kg
STOP
DRIVE ENABLE OPERATION
Light on indicates that boom has moved past a non-steer tire and drive function is turned off.
Use color-coded direction arrows on this panel and drive chassis to identify direction machine will travel.
To drive, hold drive enable switch to side and slowly move drive control handle. Machine may drive in opposite direction that drive and steer controls are moved.
18
17
16
15
14

Controls

Platform Control Panel

1 Horn button

Press this button and the horn will sound. Release the button and the horn will stop.

2 Platform level switch

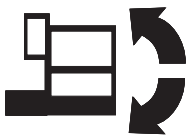

Move the platform level switch up and the level of the platform will raise. Move the platform level switch down and the level of the platform will lower.

3 Platform rotate switch



Move the platform rotate switch to the left and the platform will rotate left. Move the platform rotate switch to the right and the platform will rotate right.

4 Jib boom up/down switch

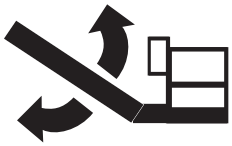

Move the jib boom switch up and the jib boom will raise. Move the jib boom switch down and the jib boom will lower.

5 Drive speed select switch

Machine on incline symbol: Low range operation for inclines.
Machine on level surface symbol: High range operation for maximum drive speed.

6 Emergency power switch

Use emergency power if the primary power source (engine) fails.
Simultaneously hold the emergency power switch to either side and activate the desired function.

7 Machine not level indicator light

Light is on when the tilt alarm is sounding. Move the machine to level ground.

8 Generator switch (if equipped)

Move the generator switch up to activate the generator. Move the switch down to turn off the generator.

9 1000 lbs / 454 kg capacity indicator light

Light on indicates that the selected platform capacity is 1000 lbs / 454 kg. The range of motion is restricted.

10 Platform capacity select switch

Move the platform capacity select switch to the left to select 1000 lbs / 454 kg platform capacity. Move the platform capacity select switch to the right to select 500 lbs / 227 kg platform capacity.

11 500 lbs / 227 kg capacity indicator light

Light on indicates that the selected platform capacity is 500 lbs / 227 kg. The range of motion is unrestricted.

12 Used for optional equipment

Controls

13 Red Emergency Stop button

Push in the red Emergency Stop button to the off position to stop all functions and turn the engine off. Pull out the red Emergency Stop button to the on position to operate the machine.

14 Dual axis proportional control handle for drive and steer functions
OR Proportional control handle for drive function and thumb rocker for steer function.

Move the control handle in the direction indicated by the blue arrow on the control panel and the machine will drive forward. Move the control handle in the direction indicated by the yellow arrow and the machine will drive backwards. Move the control handle in the direction indicated by the blue triangle and the machine will steer to the left. Move the control handle in the direction indicated by the yellow triangle and the machine will steer to the right.
OR
Move the control handle in the direction indicated by the blue arrow on the control panel and the machine will drive forward. Move the control handle in the direction indicated by the yellow arrow and the machine will drive backwards. Press the left side of the thumb rocker and the machine will steer to the left. Press the right side of the thumb rocker and the machine will steer to the right.

15 Drive enable switch

To drive when the drive enable light is on, hold the drive enable switch to either side and slowly move the drive control handle off center. Be aware that the machine may move in the opposite direction that the drive and steer controls are moved.

16 Drive enable indicator light

Light on indicates that the boom has moved just past either non-steer wheel and drive function has been interrupted.

17 Deutz Diesel Models: Glow plug switch (if equipped)

Move the glow plug switch to either side and hold for 3 to 5 seconds.

Perkins Models: Glow plug indicator light.

18 Engine idle (rpm) select switch

Move the engine idle select switch to the turtle position for foot switch activated low idle. Move the engine idle select switch to the rabbit position for foot switch activated high idle.

19 Models with LCD screen: Engine shut-down indicator light

Light on indicates that the engine has shut down. Contact service personnel.

Controls

20 Gasoline/LPG models: Fuel select switch

Move the fuel select switch to the gasoline position to select gasoline. Move the fuel select switch to the LPG position to select LPG.

21 Engine start switch

Move the engine start switch to either side to start the engine.

22 Machine malfunction indicator light

Light on indicates all functions have stopped. See the instructions in the Operating Instructions section.

23 Not used

24 Thumb rocker switch for boom extend/retract function

Push the top of the rocker switch and boom will retract. Push the bottom of the rocker switch and the boom will extend.

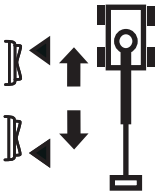

25 Dual axis proportional control handle for primary boom up/down and turntable rotate left/right functions

Move the control handle up and the primary boom will raise. Move the control handle down and the primary boom will lower.

Move the control handle to the right and the turntable will rotate to the right. Move the control handle to the left and the turntable will rotate to the left.

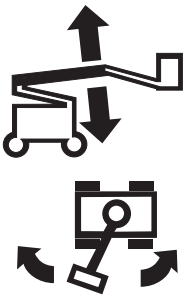

Controls

The S-60X machines will have one of these two styles of ground control panel. The descriptions in this section and the instructions in the Function Test and Operating Instructions apply to both panels, unless specifically noted.

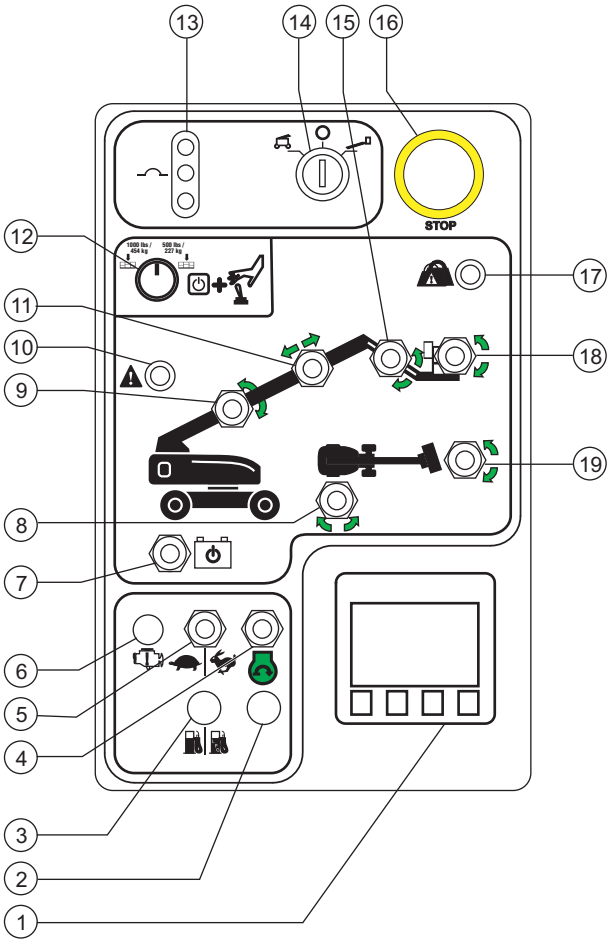

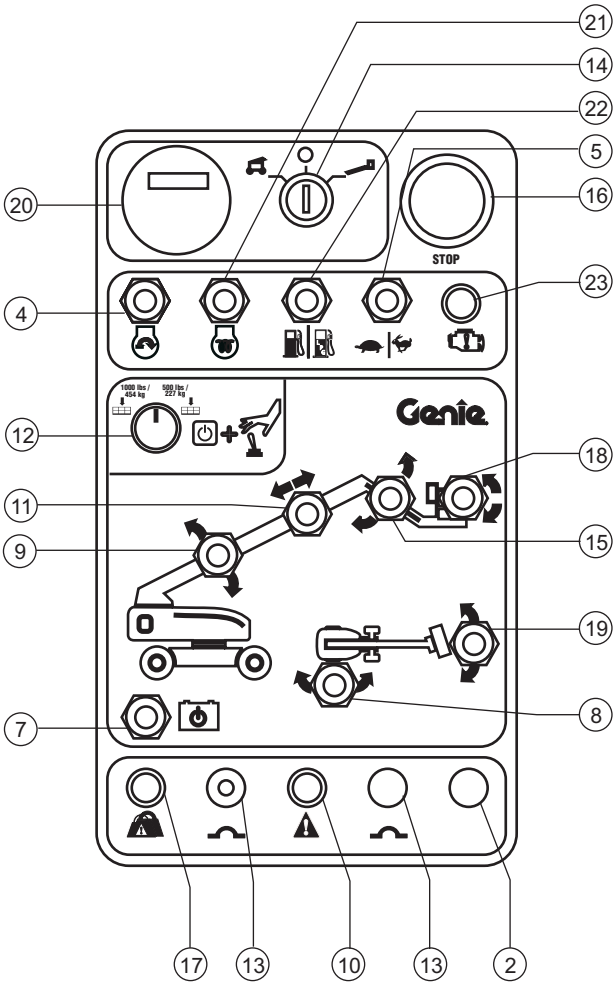

Controls

Ground Control Panel

1 LCD readout screen

Screen displays hour meter, voltage, oil pressure and coolant temperature. Screen also displays fault codes and other service information.

2 Not used

3 Not used

4 Engine start switch

Move the engine start switch to either side to start the engine.

5 Engine idle (rpm) select switch

Move the engine idle select switch to the turtle position for foot switch activated low idle. Move the engine idle select switch to the rabbit position for foot switch activated high idle.

6 Not used

7 Emergency power switch

Use emergency power if the primary power source (engine) fails.
Simultaneously hold the emergency power switch to either side and activate the desired function.

8 Turntable rotate switch

Move the turntable rotate switch to the right and the turntable will rotate to the right. Move the turntable rotate switch to the left and the turntable will rotate to the left.

9 Boom up/down switch

Move the boom up/down switch up and the boom will raise. Move the boom up/down switch down and the boom will lower.

10 Machine malfunction indicator light

Light on indicates all functions have stopped. See the instructions in the Operating Instructions section.

11 Boom extend/retract switch

Move the boom extend/retract switch to the right and the boom will extend. Move the boom extend/retract switch to the left and the boom will retract.

12 Platform capacity select/function enable switch

Move and hold the platform capacity select/function enable switch to select the platform capacity and enable the ground control panel functions to operate. The range of motion is restricted if 1000 lbs / 454 kg platform capacity is selected.

Controls

13 Circuit breakers

14 Key switch for off/ground/platform selection

Turn the key switch to the off position and the machine will be off. Turn the key switch to the ground position and the ground controls will operate. Turn the key switch to the platform position and the platform controls will operate.

15 Jib boom up/down switch

Move the jib boom switch up and the jib boom will raise. Move the jib boom switch down and the jib boom will lower.

16 Red Emergency Stop button

Push in the red Emergency Stop button to the off position to stop all functions and turn the engine off. Pull out the red Emergency Stop button to the on position to operate the machine.

17 Not used

18 Platform level switch

Move the platform level switch up and the level of the platform will raise. Move the platform level switch down and the level of the platform will lower.

19 Platform rotate switch

Move the platform rotate switch to the right and the platform will rotate to the right. Move the platform rotate switch to the left and the platform will rotate to the left.

20 Hour meter

The hour meter displays the number of hours the machine has operated.

21 Glow plug switch

Move the glow plug switch to either side and hold for 3 to 5 seconds.

22 Gasoline/LPG models: Fuel select switch

Move the fuel select switch to the gasoline position to select gasoline. Move the fuel select switch to the LPG position to select LPG.

23 Check engine light

Light on and engine stopped: Tag the machine and remove from service.
Light on and engine still running: Contact service personnel within 24 hours.

Inspections



Do Not Operate Unless:

☑ You learn and practice the principles of safe machine operation contained in this operator's manual.

1 Avoid hazardous situations.

2 Always perform a pre-operation inspection.

Know and understand the pre-operation inspection before going on to the next section.

3 Always perform function tests prior to use.

4 Inspect the workplace.

5 Only use the machine as it was intended.

Pre-operation Inspection Fundamentals

It is the responsibility of the operator to perform a pre-operation inspection and routine maintenance.

The pre-operation inspection is a visual inspection performed by the operator prior to each work shift. The inspection is designed to discover if anything is apparently wrong with a machine before the operator performs the function tests.

The pre-operation inspection also serves to determine if routine maintenance procedures are required. Only routine maintenance items specified in this manual may be performed by the operator.

Refer to the list on the next page and check each of the items.

If damage or any unauthorized variation from factory delivered condition is discovered, the machine must be tagged and removed from service.

Repairs to the machine may only be made by a qualified service technician, according to the manufacturer's specifications. After repairs are completed, the operator must perform a pre-operation inspection again before going on to the function tests.

Scheduled maintenance inspections shall be performed by qualified service technicians, according to the manufacturer's specifications and the requirements listed in the responsibilities manual.

Inspections

Pre-operation Inspection

- ❑ Be sure that the operator's, safety and responsibilities manuals are complete, legible and in the storage container located in the platform.
- ❑ Be sure that all decals are legible and in place. See Inspections section.
- ❑ Check for hydraulic oil leaks and proper oil level. Add oil if needed. See Maintenance section.
- ❑ Check for battery fluid leaks and proper fluid level. Add distilled water if needed. See Maintenance section.
- ❑ Check for engine oil leaks and proper oil level. Add oil if needed. See Maintenance section.
- ❑ Check for engine coolant leaks and proper level of coolant. Add coolant if needed. See Maintenance section.
- ❑ Check for proper tire pressure. Add air if needed. See Maintenance section.

Check the following components or areas for damage, improperly installed or missing parts and unauthorized modifications:

- ❑ Electrical components, wiring and electrical cables
- ❑ Hydraulic hoses, fittings, cylinders and manifolds
- ❑ Fuel and hydraulic tanks
- ❑ Drive and turntable motors and drive hubs
- ❑ Wear pads
- ❑ Tires and wheels
- ❑ Engine and related components
- ❑ Limit switches and horn
- ❑ Alarms and beacons (if equipped)
- ❑ Nuts, bolts and other fasteners
- ❑ Platform entry mid-rail or gate

Check entire machine for:

- ❑ Cracks in welds or structural components
- ❑ Dents or damage to machine
- ❑ Excessive rust, corrosion or oxidation

- ❑ Be sure that all structural and other critical components are present and all associated fasteners and pins are in place and properly tightened.
- ❑ After you complete your inspection, be sure that all compartment covers are in place and latched.

Inspections



Do Not Operate Unless:

☑ You learn and practice the principles of safe machine operation contained in this operator's manual.

1 Avoid hazardous situations.

2 Always perform a pre-operation inspection.

3 Always perform function tests prior to use.

Know and understand the function tests before going on to the next section.

4 Inspect the workplace.

5 Only use the machine as it was intended.

Function Test Fundamentals

The function tests are designed to discover any malfunctions before the machine is put into service. The operator must follow the step-by-step instructions to test all machine functions.

A malfunctioning machine must never be used. If malfunctions are discovered, the machine must be tagged and removed from service. Repairs to the machine may only be made by a qualified service technician, according to the manufacturer's specifications.

After repairs are completed, the operator must perform a pre-operation inspection and function tests again before putting the machine into service.

At the Ground Controls

1 Select a test area that is firm, level and free of obstruction.

2 Turn the key switch to ground control.

3 Pull out the red Emergency Stop button to the on position.

⊙ Result: The beacons (if equipped) should flash.

4 Start the engine. See Operating Instructions section.

Test Emergency Stop

5 Push in the red Emergency Stop button to the off position.

⊙ Result: The engine should shut off and no functions should operate.

6 Pull out the red Emergency Stop button to the on position and restart the engine.

Test the Machine Functions and the Platform Capacity Selection

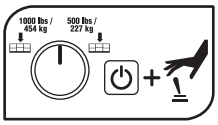

7 Do not move and hold the platform capacity select/function enable switch. Attempt to activate each boom and platform function toggle switch.

⊙ Result: No boom and platform functions should operate.

8 Move and hold the platform capacity select/function enable switch to select 500 lbs / 227 kg platform capacity. Activate each boom and platform function toggle switch.

⊙ Result: All boom and platform functions should operate through a full cycle. The descent alarm should sound while the boom is lowering.

9 Move and hold the platform capacity select/function enable switch to select 1000 lbs / 454 kg platform capacity. Raise and extend the boom.

10 Move and hold the platform capacity select/function enable switch to select 1000 lbs / 454 kg platform capacity. Lower the boom.

⊙ Result: The boom should stop part way down.

11 Move and hold the platform capacity select/function enable switch to select 1000 lbs / 454 kg platform capacity. Retract the boom.

12 Retract the boom to continue and then fully retract and lower the boom.

Inspections

Test the Tilt Sensor

13 Pull out the platform red Emergency Stop button to the on position. Turn the key switch to platform control.

14 Open the tank side turntable cover and locate the tilt sensor next to the fuel tank.

15 Press down one side of the tilt sensor.

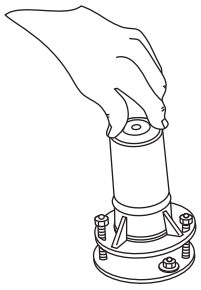

⊙ Result: The alarm, located in the platform, should sound.

Test Emergency Controls

16 Turn the key switch to ground control and shut the engine off.

17 Pull out the red Emergency Stop button to the on position.

18 Simultaneously hold the emergency power switch on and activate each boom function toggle switch.

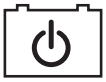

Note: To conserve battery power, test each function through a partial cycle.

⊙ Result: All boom functions should operate.

At the Platform Controls

Test Emergency Stop

19 Enter the platform and pull out the red Emergency Stop button. Start the engine.

20 Push in the platform red Emergency Stop button to the off position.

⊙ Result: The engine should shut off and no functions should operate.

21 Pull out the red Emergency Stop button and restart the engine.

Test the Horn

22 Press the horn button.

⊙ Result: The horn should sound.

Inspections

Test the Machine Functions and the Platform Capacity Selection

Note: Perform this test with less than 500 lbs / 227 kg in the platform.

23 Pull out the red Emergency Stop button to the on position.

⊙ Result: Both capacity indicator lights should flash.

24 Press down the foot switch. Test each machine function.

⊙ Result: The boom raise and extend functions should not operate.

25 Move the platform capacity select switch to the left to select 1000 lbs / 454 kg capacity.

26 First, fully raise and then fully extend the boom to full height. Lower the boom.

⊙ Result: The boom should stop part way down and the 500 lbs / 227 kg capacity indicator light should flash.

27 Retract the boom to continue and then fully retract and lower the boom.

Test the Foot Switch

28 Push in the platform red Emergency Stop button to the off position.

29 Pull out the red Emergency Stop button to the on position and do not start the engine.

30 Press down the foot switch and attempt to start the engine by moving the start toggle switch to either side.

⊙ Result: The engine should not start.

31 Do not press down the foot switch and restart the engine.

⊙ Result: The engine should start.

32 Do not press down the foot switch and test each machine function.

⊙ Result: No functions should operate.

Inspections

Test the Steering

33 Press down the foot switch.

34 Press the thumb rocker switch on top of the drive control handle in the direction indicated by the blue triangle on the control panel OR slowly move the control handle in the direction indicated by the blue triangle.

⊙ Result: The steer wheels should turn in the direction that the blue triangles point on the drive chassis.

35 Press the thumb rocker switch in the direction indicated by the yellow triangle on the control panel OR slowly move the control handle in the direction indicated by the yellow triangle.

⊙ Result: The steer wheels should turn in the direction that the yellow triangles point on the drive chassis.

Test Drive and Braking

36 Press down the foot switch.

37 Slowly move the drive control handle in the direction indicated by the blue arrow on the control panel until the machine begins to move, then return the handle to the center position.

⊙ Result: The machine should move in the direction that the blue arrow points on the drive chassis, then come to an abrupt stop.

38 Slowly move the control handle in the direction indicated by the yellow arrow on the control panel until the machine begins to move, then return the handle to the center position.

⊙ Result: The machine should move in the direction that the yellow arrow points on the drive chassis, then come to an abrupt stop.

Note: The brakes must be able to hold the machine on any slope it is able to climb.

Inspections

Test the Oscillating Axle (if equipped)

39 Start the engine from the platform controls.

40 Drive the right steer tire up onto a 6 in / 15 cm block or curb.

⊙ Result: The three remaining tires should stay in firm contact with the ground.

41 Drive the left steer tire up onto a 6 in / 15 cm block or curb.

⊙ Result: The three remaining tires should stay in firm contact with the ground.

42 Drive both steer tires up onto a 6 in / 15 cm block or curb.

Result: The non-steer tires should stay in firm contact with the ground.

Test the Drive Enable System

43 Press down the foot switch and lower the boom to the stowed position.

44 Rotate the turntable until the boom moves past one of the non-steer wheels.

⊙ Result: The drive enable indicator light should come on and remain on while the boom is anywhere in the range shown.



45 Move the drive control handle off center.

⊙ Result: The drive function should not operate.

46 Move and hold the drive enable toggle switch to either side and slowly move the drive control handle off center.

⊙ Result: The drive function should operate.

Note: When the drive enable system is in use, the machine may drive in the opposite direction that the drive and steer control handle is moved.

Use the color-coded direction arrows on the platform controls and the drive chassis to identify the direction of travel.

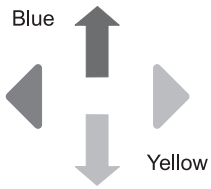

Inspections

Test Limited Drive Speed

47 Press down the foot switch.

48 Raise the boom to just above horizontal.

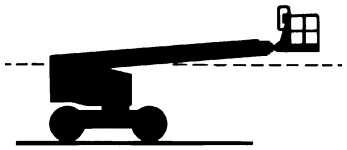

49 Slowly move the control handle to full drive position.

⊙ Result: The maximum achievable drive speed with the boom raised should not exceed 1 ft / 30 cm per second.

50 Lower the boom to the stowed position.

51 Extend the boom 18 inches / 46 cm.

52 Slowly move the control handle to full drive position.

⊙ Result: The maximum achievable drive speed with the boom extended should not exceed 1 ft / 30 cm per second.

If the drive speed with the boom raised or extended exceeds 1 ft / 30 cm per second, immediately tag and remove the machine from service.

Test Emergency Controls

53 Shut off the engine.

54 Pull out the red Emergency Stop button to the on position.

55 Press down the foot switch.

56 Simultaneously hold the emergency power switch on and activate each function control handle or toggle switch.

Note: To conserve battery power, test each function through a partial cycle.

⊙ Result: All boom and steer functions should operate. Drive functions should not operate with emergency power.

Test Aircraft Protection Package (if equipped)

Note: Two people may be required to perform this test.

57 Move the yellow bumper at the bottom of the platform 4 inches / 10 cm in any direction.

58 Activate each function control handle or toggle switch.

⊙ Result: No boom and steer functions should operate.

59 Move and hold the function override switch.

60 Activate each function control handle or toggle switch.

⊙ Result: All boom and steer functions should operate.

Inspections



Do Not Operate Unless:

☑ You learn and practice the principles of safe machine operation contained in this operator's manual.

1 Avoid hazardous situations.

2 Always perform a pre-operation inspection.

3 Always perform function tests prior to use.

4 Inspect the workplace.

Know and understand the workplace inspection before going on to the next section.

5 Only use the machine as it was intended.

Workplace Inspection Fundamentals

The workplace inspection helps the operator determine if the workplace is suitable for safe machine operation. It should be performed by the operator prior to moving the machine to the workplace.

It is the operator's responsibility to read and remember the workplace hazards, then watch for and avoid them while moving, setting up and operating the machine.

Workplace Inspection Checklist

Be aware of and avoid the following hazardous situations:

- ❑ drop-offs or holes
- ❑ bumps, floor obstructions or debris
- ❑ sloped surfaces
- ❑ unstable or slippery surfaces
- ❑ overhead obstructions and high voltage conductors
- ❑ hazardous locations
- ❑ inadequate surface support to withstand all load forces imposed by the machine
- ❑ wind and weather conditions
- ❑ the presence of unauthorized personnel
- ❑ other possible unsafe conditions

Inspections

Inspection for Decals with Words

Determine whether the decals on your machine have words or symbols. Use the appropriate inspection to verify that all decals are legible and in place.

Below is a numerical list with quantities and descriptions.

Part No.	Decal Description	Qty
27204	Arrow – Blue	1
27205	Arrow – Yellow	1
27206	Triangle – Blue	2
27207	Triangle – Yellow	2
28158	Label – Unleaded	1
28159	Label – Diesel	1
28160	Label – Liquid Petroleum Gas	1
28174	Label – Power to Platform, 230V	2
28175	Warning – Compartment Access	2
28235	Label – Power to Platform, 115V	2
28236	Warning – Improper Operation	1
31060	Danger – Tip-over Hazard, Limit Switch	5
31788	Danger – Explosion/Burn Hazard	1
40434	Label – Lanyard Anchorage Point	8
44981	Label – Air Line to Platform (option)	2
52475	Label – Transport Tie Down	6
52607	Label – Test Switch	1
52865	Warning – Annual Inspection Record	1
52966	Cosmetic – 4 x 2	1
52967	Cosmetic – 4 x 4	1
62077	Cosmetic – S-60	1
72086	Label – Lifting Point	4
72168	Label – Starter Battery	1
72169	Label – Controls Battery	1
72875	Warning – Pipe Cradle (option)	2
82237	Danger – Electrocution Hazard (option)	3
82366	Label – Chevron Rando	1
82410	Warning – Panel Cradle (option)	2
82677	Danger – Tire Specifications	4
82862	Danger – Fire Extinguisher, Welder (option)	1
97548	Instructions – Deutz Engine Specifications (F3L 2011 & D2011 L03i)	1
97579	Danger – Tip-over Welder (option)	1
97602	Warning – Explosion Hazard	1
97815	Label – Lower Mid-rail	1
97875	Warning – Weld Line to Platform	2
114258	Danger – Explosion Hazard	2
114390	Danger – Electrocution Hazard	3
114416	Danger – Tip-over Hazard, Tilt Alarm	1
125953	Instructions - Deutz Engine Specifications	1
133238	Instructions – Perkins Engine Specifications (404D-22)	1
133278	Label – Low Sulfur Fuel (diesel models)	1
147575	Platform Control Panel	1
147658	Cosmetic – Genie S-60X	1
147755	Ground Control Panel	1
215526	Label – Belt Routing (MSG-425)	1
215527	Instructions – Ford Engine Specifications (MSG-425)	1
218559	Danger, Warning – Tip-over, Crush Hazard	1
229743	Label – Wheel Load, S-60X	4
822004	Instructions – Perkins Engine Specifications, (404F-22)	1
822131	Instructions - Deutz Engine Specifications (D2.9 L4)	1
823658	Ground Control Panel	1
823764	Platform Control Panel	1
825579	Instructions – LCD Screen	1
826345	Label – Ultra Low Sulfur Fuel Only (diesel models)	1
1255581	Cosmetic – Genie	2
1255582	Cosmetic – Genie	1
1260107	Label – Transport and Lifting	2
1261737	Danger – Tip-over Hazard	1
1262342	Warning – Slope Rating	1
1262344	Instructions – Operating Instructions	1

Shading indicates decal is hidden from view, i.e. under covers

Inspections

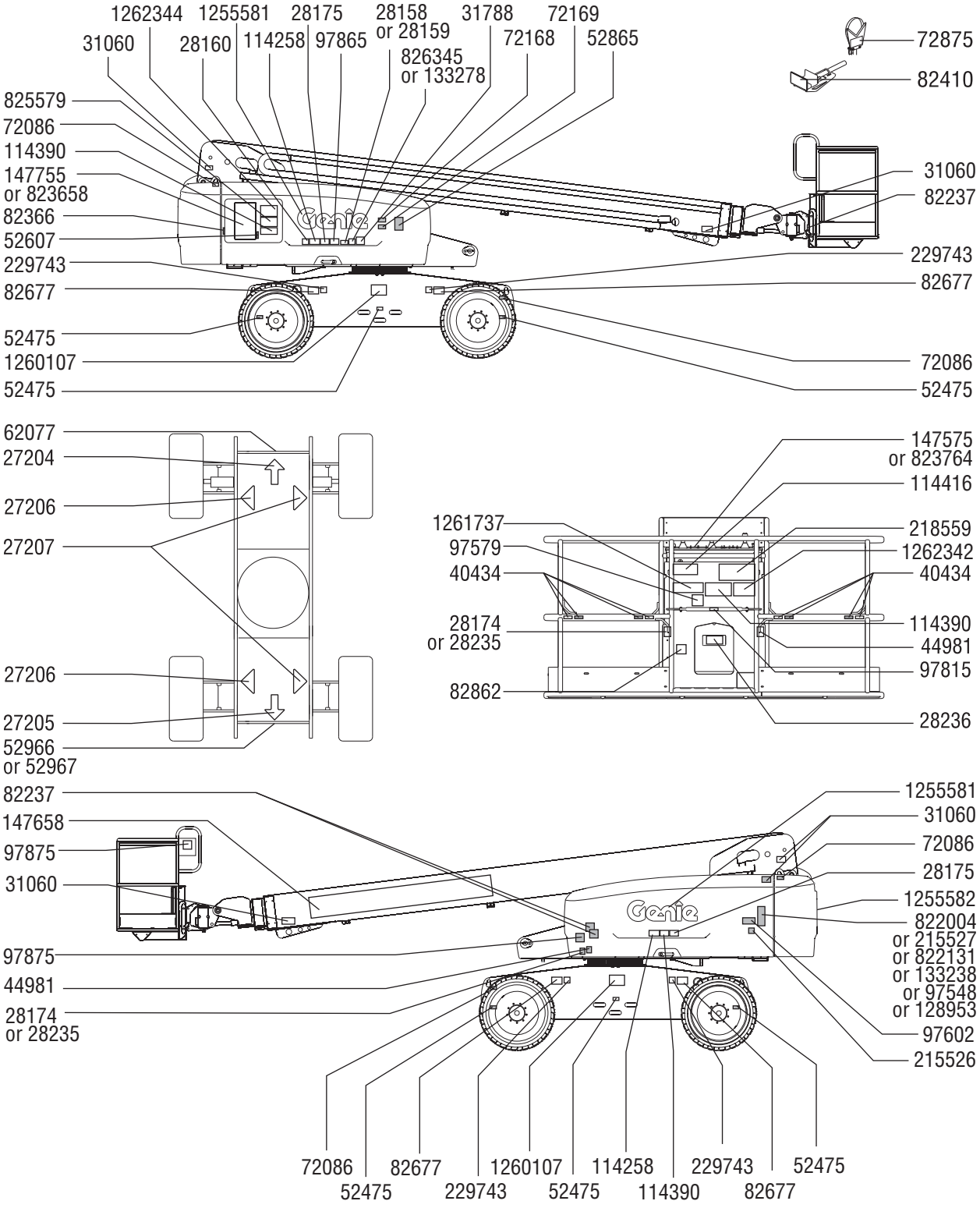

Inspections

Inspection for Decals with Symbols

Determine whether the decals on your machine have words or symbols. Use the appropriate inspection to verify that all decals are legible and in place.

Below is a numerical list with quantities and descriptions.

Part No.	Decal Description	Qty
27204	Arrow – Blue	1
27205	Arrow – Yellow	1
27206	Triangle – Blue	2
27207	Triangle – Yellow	2
28158	Label – Unleaded	1
28159	Label – Diesel	1
28160	Label – Liquid Petroleum Gas	1
28174	Label – Power to Platform, 230V	2
28235	Label – Power to Platform, 115V	2
40434	Label – Lanyard Anchorage Point	8
44981	Label – Air Line to Platform (option)	2
52475	Label – Transport Tie-down	6
52966	Cosmetic – 4 x 2	1
52967	Cosmetic – 4 x 4	1
62077	Cosmetic – S-60	1
72086	Label – Lifting Point	4
82473	Label – Compartment Access	2
82481	Label – Battery/Charger Safety	1
82487	Label – Read the Manual	2
82487	Label – Read the Manual, Panel Cradle	2
82487	Label – Read the Manual, Pipe Cradle	2
82551	Label – Tire Pressure	4
97815	Label – Lower Mid-rail	1
114249	Label – Tip-over Hazard, Tires	4
114251	Label – Explosion Hazard	2
114252	Label – Tip-over Hazard, Limit Switches	5
114473	Label – Tilt Alarm	1
133067	Label – Electrocution Hazard	3
133205	Label – Electrocution/Burn Hazard	1
133387	Drive Enable Patch	1
147575	Platform Control Panel	1
147658	Cosmetic – Genie S-60X	1
147755	Ground Control Panel	1
215526	Label – Belt Routing (MSG-425)	1
219958	Label – Tip-over, Crush Hazard	1
229743	Label – Wheel Load, S-60X	4
823658	Ground Control Panel	1
823764	Platform Control Panel	1
1255581	Cosmetic – Genie	2
1255582	Cosmetic – Genie	1
1256425	Label – Danger, Electrocution Hazard	3
1260107	Label – Transport and Lifting	2
1261414	Label – Tip-over Hazard	1
1262343	Label – Runaway Machine Hazard	1

Shading indicates decal is hidden from view, i.e. under covers

Inspections

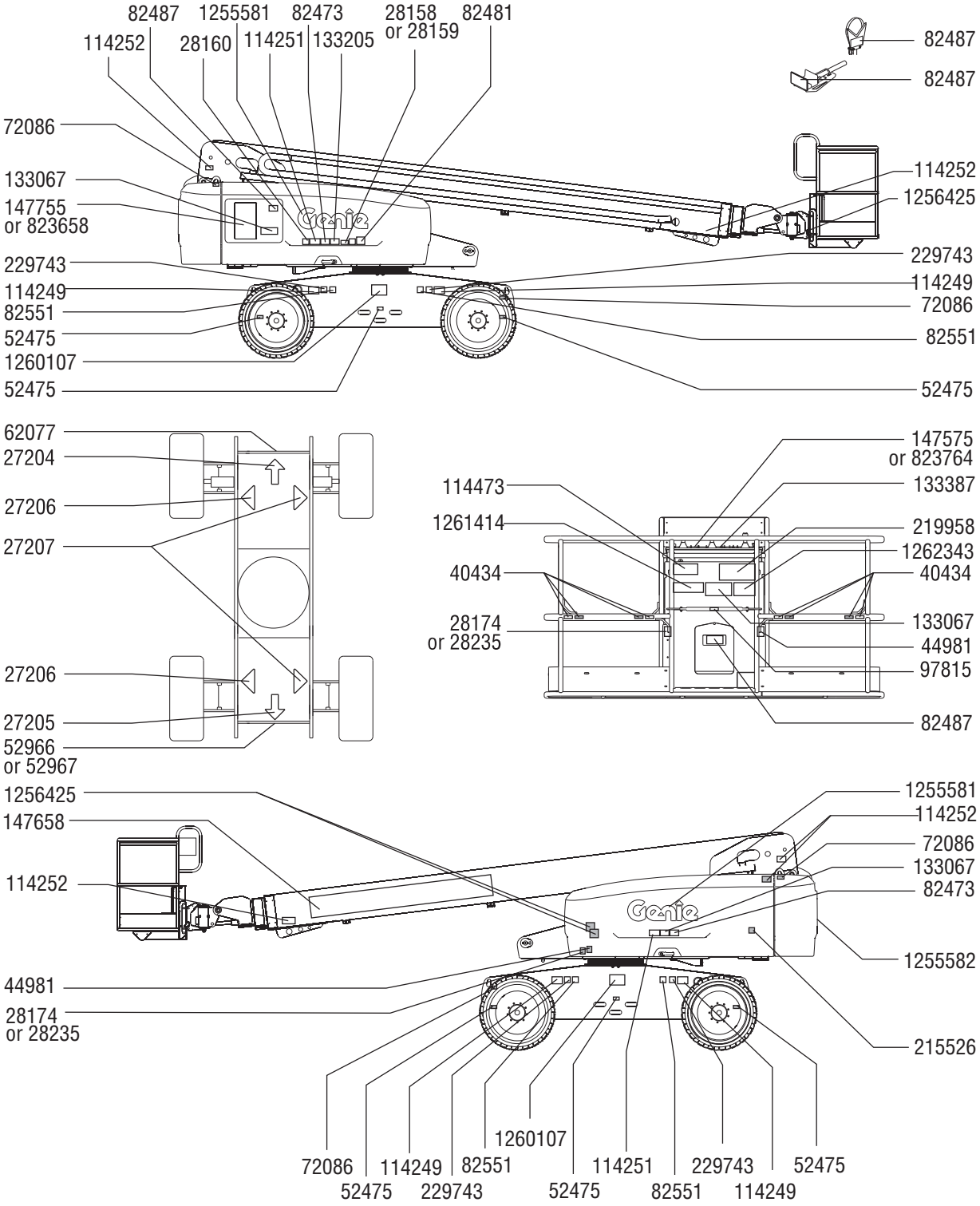

Operating Instructions



Do Not Operate Unless:

☑ You learn and practice the principles of safe machine operation contained in this operator's manual.

1 Avoid hazardous situations.

2 Always perform a pre-operation inspection.

3 Always perform function tests prior to use.

4 Inspect the workplace.

5 Only use the machine as it was intended.

Fundamentals

The Operating Instructions section provides instructions for each aspect of machine operation. It is the operator's responsibility to follow all the safety rules and instructions in the operator's, safety and responsibilities manuals.

Using the machine for anything other than lifting personnel, along with their tools and materials, to an aerial work site is unsafe and dangerous.

Only trained and authorized personnel should be permitted to operate a machine. If more than one operator is expected to use a machine at different times in the same work shift, they must all be qualified operators and are all expected to follow all safety rules and instructions in the operator's, safety and responsibilities manuals. That means every new operator should perform a pre-operation inspection, function tests, and a workplace inspection before using the machine.

Operating Instructions

Starting the Engine

Gasoline/LPG models

1 At the ground controls, turn the key switch to the desired position.

2 Be sure both ground and platform control red Emergency Stop buttons are pulled out to the on position.

3 Choose fuel by moving the fuel select switch to the desired position.

4 Move the engine start toggle switch to either side. If the engine fails to start or dies, the restart delay will disable the start switch for 3 seconds.

Diesel models

1 At the ground controls, turn the key switch to the desired position.

2 Be sure both ground and platform control red Emergency Stop buttons are pulled out to the on position.

Models with glow plug toggle switch:

3 Move the glow plug switch to either side and hold for 3 to 5 seconds.

4 Move the engine start toggle switch to either side. If the engine fails to start or dies, the restart delay will disable the start switch for 3 seconds.

Models with automatic glow plugs:

5 The LCD screen will display the glow plug symbol when the automatic glow plugs are on.



6 When the automatic glow plug symbol turns off, move the engine start toggle switch to either side. If the engine fails to start or dies, the restart delay will disable the start switch for 3 seconds.

Operating Instructions

Emergency Stop

Push in the red Emergency Stop button to the off position at the ground controls or the platform controls to stop all machine functions and turn the engine off.

Repair any function that operates when either red Emergency Stop button is pushed in.

Selecting and operating the ground controls will override the platform red Emergency Stop button.

Emergency Power

Use emergency power if the primary power source (engine) fails.

1 Turn the key switch to ground or platform control.

2 Pull out the red Emergency Stop button to the on position.

3 Press down the foot switch when using the controls from the platform.

4 Simultaneously hold the emergency power switch to either side and activate the desired function.

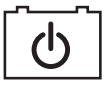

The drive and steer functions will not operate with emergency power.

Operation from Ground

1 Turn the key switch to ground control.

2 Pull out the red Emergency Stop button to the on position.

3 Gasoline/LPG models: Choose fuel by moving the fuel select switch to the desired position.

4 Start the engine.

To Position Platform

1 Move and hold the platform capacity select/function enable switch. See Platform Capacity Selection section.

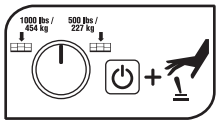

2 Move the appropriate toggle switch according to the markings on the control panel.

Drive and steer functions are not available from the ground controls.

Operating Instructions

Operation from Platform

1 Turn the key switch to platform control.

2 Pull out both ground and platform red Emergency Stop buttons to the on position.

3 Gasoline/LPG models: Choose fuel by moving the fuel select switch to the desired position.

4 Start the engine. Do not press down the foot switch when starting the engine.

To Position Platform

1 Select the platform capacity. See Platform Capacity Selection section.

2 Press down the foot switch.

3 Slowly move the appropriate function control handle or toggle switch according to the markings on the control panel.

If the red Emergency Stop button is pushed in and pulled back out, the platform capacity will need to be selected again.

To Steer

1 Press down the foot switch.

2 Slowly move the drive control handle in the direction indicated by blue or yellow triangles OR press the thumb rocker switch located on top of the drive control handle.

Use the color-coded direction arrows on the platform controls and the drive chassis to identify the direction the wheels will turn.

To Drive

1 Press down the foot switch.

2 Increase speed: Slowly move the control handle off center.

Decrease speed: Slowly move the control handle toward center.

Stop: Return the control handle to center or release the function enable switch.

Use the color-coded direction arrows on the platform controls and the drive chassis to identify the direction the machine will travel.

Machine travel speed is restricted when the boom is raised.

Operating Instructions

⚠ Driving on a slope

Determine the uphill, downhill and side slope ratings for the machine and determine the slope grade.



Maximum slope rating, platform downhill (gradeability):
2WD: 30% (17°)
4WD: 45% (24°)



Maximum slope rating, platform uphill:
2WD: 10% (6°)
4WD: 30% (17°)



Maximum side slope rating:
25% (14°)

Note: Slope rating is subject to ground conditions and adequate traction.The term gradeability applies to the counterweight uphill configuration only.

Be sure the boom is below horizontal and the platform is between the circle-end wheels.

Move the drive speed select switch to machine on incline symbol.

To determine the slope grade:

Measure the slope with a digital inclinometer OR use the following procedure.

You will need:

- carpenter's level
- straight piece of wood, at least 3 feet / 1 m long
- tape measure

Lay the piece of wood on the slope.

At the downhill end, lay the level on the top edge of the piece of wood and lift the end until the piece of wood is level.

While holding the piece of wood level, measure the vertical distance from the bottom of the piece of wood to the ground.

Divide the tape measure distance (rise) by the length of the piece of wood (run) and multiply by 100.

Example:

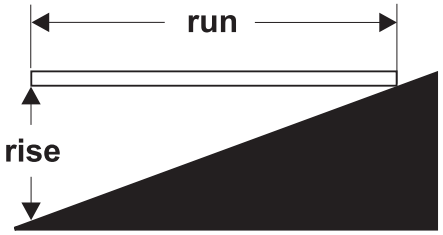

Piece of wood = 144 inches (3.6 m)

Run = 144 inches (3.6 m)

Rise = 12 inches (0.3 m)

12 in ÷ 144 in = 0.083 x 100 = 8.3% grade
0.3 m ÷ 3.6 m = 0.083 x 100 = 8.3% grade

If the slope exceeds the maximum slope or side slope rating, then the machine must be winched or transported up or down the slope. See Transport and Lifting section.

Operating Instructions

Drive Enable

Light on indicates that the boom has moved just past either non-steer wheel and the drive function has been interrupted.



To drive, hold the drive enable switch to either side and slowly move the drive control handle off center.

Be aware that the machine may move in the opposite direction that the drive and steer controls are moved.

Always use the color-coded direction arrows on the platform controls and the drive chassis to identify the direction the machine will travel.

Drive Speed Select



- Machine on incline symbol: Low range operation for inclines or rough terrain
- Machine on level surface symbol: High range operation for maximum drive speed

Engine Idle Select (rpm)

Select engine idle (rpm) using the symbols on the control panel.

When the foot switch is not pressed, the engine will idle at the lowest rpm.

- Turtle symbol: Foot switch activated low idle
- Rabbit symbol: Foot switch activated high idle

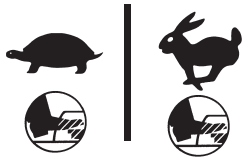

Generator (if equipped)

To operate the generator, move the generator toggle switch to the on position.

The generator will turn on and the engine will continue to run. Pressing down on the foot switch will turn the generator off. Releasing the foot switch will turn the generator back on.

Plug a power tool into the power to platform GFCI outlet.

To stop the generator, move the generator toggle switch to the off position.

Operating Instructions

Machine Not Level Indicator Light (if equipped)



Light on indicates machine is not level. The tilt alarm will be sounding when this light is on. Move the machine to a firm level surface.

Machine Malfunction Indicator Light



Light on indicates all functions have stopped.

1 Push in and then pull out the red Emergency Stop button.

2 Lower and retract the boom.

3 Tag the machine and remove from service. Functions will not operate.

Check Engine Light (if equipped)



Light on and engine stopped: Tag the machine and remove from service.

Light on and engine still running: Contact service personnel within 24 hours.

Engine Shut-down indicator light (if equipped)



Light on: Tag and remove the machine from service.

Aircraft Protection Package (if equipped)

If the platform bumpers come into contact with aircraft components, the machine will shut down and no functions will operate.

1 Start the engine.

2 Press down the foot switch.

3 Move and hold the aircraft protection function override switch.

4 Move the appropriate function control handle or toggle switch to move the machine away from aircraft components.

Operating Instructions

LCD Screen (if equipped)



The LCD screen displays hour meter, voltage, oil pressure and coolant temperature. The screen also displays fault codes and other service information.

Perkins Engine

Machines equipped with Perkins diesel engines with an LCD screen have a regeneration mode that should run automatically when needed.

Left amber light on and high temperature text box present: Regeneration mode is running. No service required.

Right side amber light on or flashing: Regeneration is required.

1 Push in red Emergency Stop button to turn the machine off.

2 Restart the engine. The regeneration mode should run automatically.

Left amber light on and no high temperature text box present: Regeneration mode is turned off. To turn the regeneration mode on:

1 Push in red Emergency Stop button to turn the machine off.

2 Restart the engine

Flashing red lights: contact service personnel.

Flashing green lights: contact service personnel within 24 hours.

Deutz engine

Flashing red lights: contact service personnel.

Flashing green lights: contact service personnel within 24 hours.

Operating Instructions

Platform Capacity Selection

At the Ground Controls

Determine the weight of all occupants, equipment and materials in the platform.

Refer to the load chart on this page or on the machine to determine the available working range of motion.

Move and hold the platform capacity select/function enable switch to select the platform capacity.

Less than 501 lbs / 227 kg: The range of motion is unrestricted.

501-1000 lbs / 227-454 kg: The range of motion is restricted.

The machine will stop when the machine reaches the limit of the restricted range of motion. Raise or retract the boom to continue.

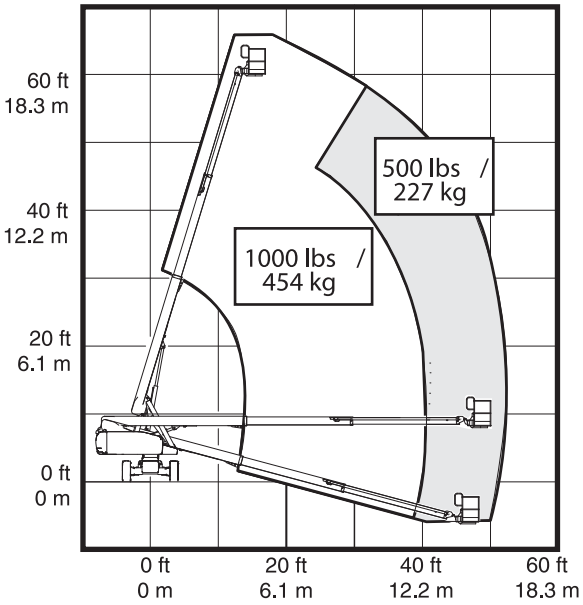

At the Platform Controls

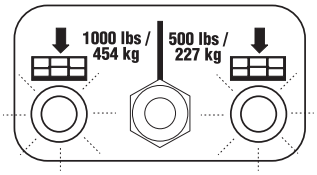

Two light blinking indicates that the capacity has not been selected.

Determine the weight of all occupants, equipment and materials in the platform.

Refer to the load chart on this page or on the machine to determine the available working range of motion.

Move and hold the platform capacity select/function enable switch to select the platform capacity.

Less than 501 lbs / 227 kg: The range of motion is unrestricted.

501-1000 lbs / 227-454 kg: The range of motion is restricted.

The machine will stop when the machine reaches the limit of the restricted range of motion. Raise or retract the boom to continue.

If the red Emergency Stop button is pushed in and pulled back out, the platform capacity will need to be selected again.

If the machine is started when the platform is outside the restricted range of motion, the 500 lbs / 227 kg capacity light will flash. Select 500 lbs / 227 kg capacity to continue. Do not exceed the platform capacity of 500 lbs / 227 kg.

Operating Instructions

Pipe Cradle Instructions

The pipe cradle assembly consists of 2 pipe cradles positioned at either side of the platform and mounted to the guardrails with U-bolts.

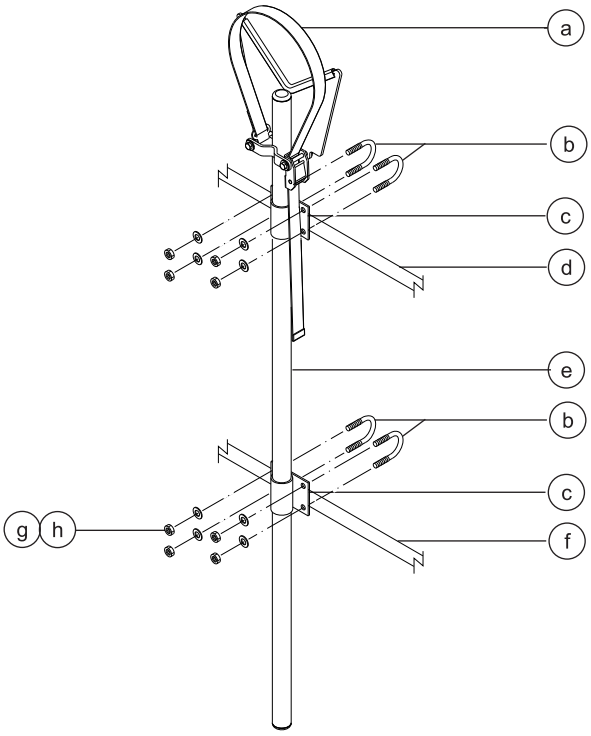

a strap
b U-bolts
c pipe cradle mount
d upper platform railing
e pipe cradle weldment
f middle platform railing
g flat washers
h nylock nuts

Observe and Obey:

☑ Pipe cradles must be installed on the inside of the platform.

☑ Pipe cradles must not obstruct the platform controls or the platform entrance.

☑ The bottom of the pipe cradle tube must rest on the platform floor.

☑ Be sure the platform is level before installing a pipe cradle.

Pipe Cradle Installation

1 Install a pipe cradle on each side of the platform. Refer to the illustration on the left. Make sure the bottom of the pipe cradle tube rests on the platform floor.

2 Install two U-bolts from the outside of the platform rails through each pipe cradle mount.

3 Secure each U-bolt with 2 washers and 2 nuts.

Operating Instructions

Pipe Cradle Operation

1 Be sure the pipe cradle assembly and installation instructions have been followed properly and that the pipe cradles are secured to the platform railings.

2 Place the load so that it rests in both pipe cradles. The length of the load should be parallel with the length of the platform.

3 Center the load in the pipe cradles.

4 Secure the load to each pipe cradle. Pass the nylon strap over the load. Depress the buckle and slide the strap through. Tighten the strap.

5 Gently push and pull on the load to make sure the pipe cradles and load are secure.

6 Keep the load secured when the machine is moving.

⚠ Tip-over hazard. The weight of the pipe cradle assembly and the load in the pipe cradles will reduce the rated platform capacity of the machine and must be factored into the total platform load.

⚠ Tip-over hazard. The weight of the pipe cradle assembly and the load in the pipe cradles may limit the maximum number of occupants in the platform.

Maximum Pipe Cradle Capacity	
All models	200 lbs 90.7 kg
Pipe Cradle Assembly Weight	21 lbs 9.5 kg

Panel Cradle Assembly

1 Apply the warning decal to the front of each panel cradle (if needed).

2 Install rubber bumper 1 in the panel cradle base. See the illustration.

3 Secure the bumper with 2 high profile lock nuts and 2 washers.

Panel Cradle Installation

1 Insert the hook piece through the slots in the panel cradle base.

2 Hook the panel cradle to the bottom platform tube in the desired location.

3 Install rubber bumper 2 through the panel cradle base and the hook piece. See the illustration.

4 Secure with 2 low profile lock nuts.

5 If the panel cradle is installed at a platform floor support tube, insert the U-bolt through the floor, around the tube and into the panel cradle base.

6 Secure the U-bolt with 2 nuts and 2 washers. Proceed to step 9.

7 If the panel cradle is not installed at a platform floor support tube, use the aluminum tube provided.

8 Place the tube between the panel cradle and the platform floor. Insert the U-bolt through the floor, around the tube and into the panel cradle base.

9 Repeat above for the second set of parts.

Operating Instructions

Installation of Padding

1 Install the 2 pieces of padding on the platform rails. Position the padding to protect the panels from contact with the platform rails.

Installation of Strap

1 Open the clamp and install it around a vertical platform rail tube.

2 Insert a bolt with a washer through one side of the clamp.

3 Install the strap assembly end plate onto the bolt.

4 Insert the bolt through the other side of the clamp.

5 Secure with a washer and a nut. Do not over-tighten. The strap assembly end plate should be able to slide on the platform rail.

Panel Cradle Operation

1 Secure both panel cradles to the platform.

2 Place the load so that it rests in both panel cradles.

3 Center the load on the platform.

4 Secure the load to the platform using the strap. Tighten the strap.

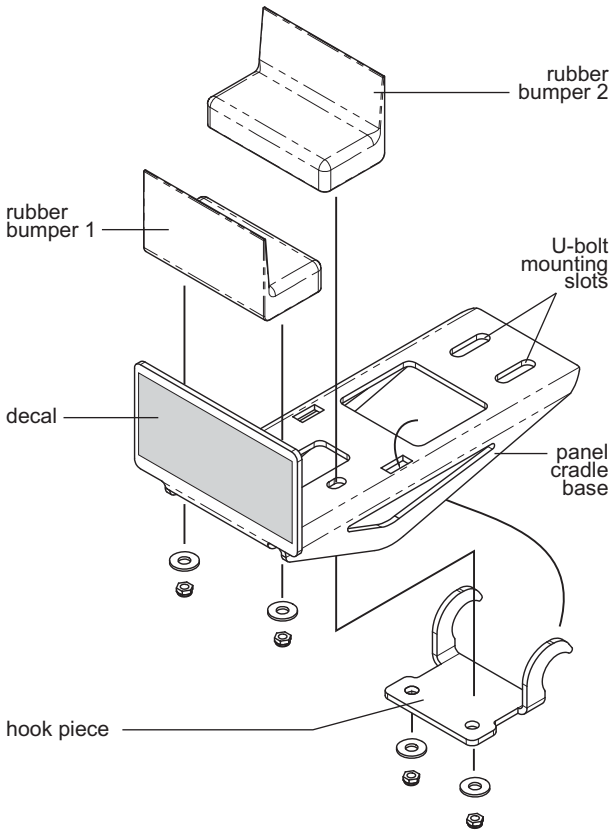

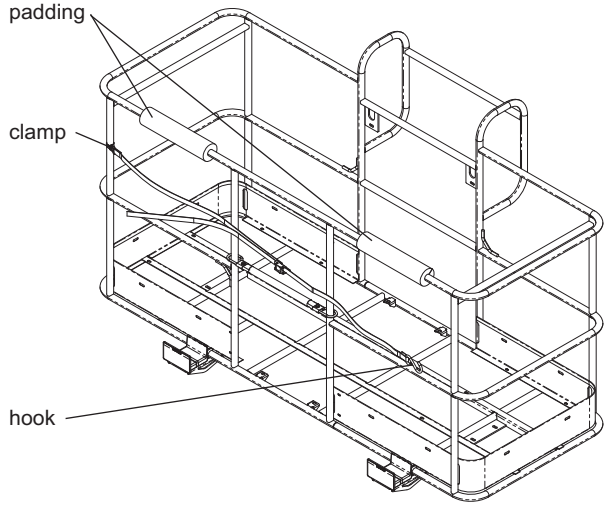

Operating Instructions

After Each Use

1 Select a safe parking location—firm level surface, clear of obstruction and traffic.

2 Retract and lower the boom to the stowed position.

3 Rotate the turntable so that the boom is between the non-steer wheels.

4 Turn the key switch to the off position and remove the key to secure from unauthorized use.

Towing Instructions

Using the Tow Package

Before Towing:

1 Position the machine on a level surface. Chock the wheels to prevent the machine from rolling.

2 Attach the tow bar securely to the machine. Attach the tow bar securely to the towing vehicle.

3 Release the drive torque hubs by turning over the drive hub disconnect caps.

4 4WD models: Release the front drive torque hubs by turning over the drive disconnect caps.

5 Turn the steering bypass valve counterclockwise to hydraulically release the steering.

⚠WARNING Do not exceed recommended maximum towing speed or maximum towing times.

Maximum tow speed	**8 mph / 12.87 km/h**
Maximum towing time at 8 mph / 13 km/h	**30 minutes**
Maximum towing time at 6 mph / 10 km/h	**60 minutes**

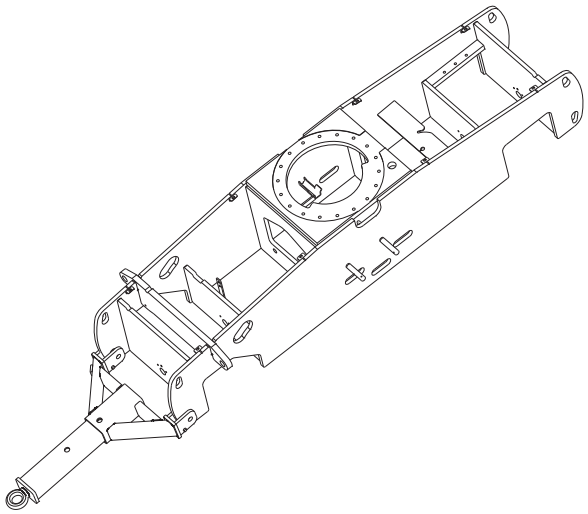

After Towing:

1 Immediately after towing, chock the wheels, detach the tow bar and reverse the drive hub disconnect caps.

2 Secure the tow bar back onto the machine.

3 Test steer, drive and brake functions on a level surface prior to returning the machine to operation. See Function Tests.

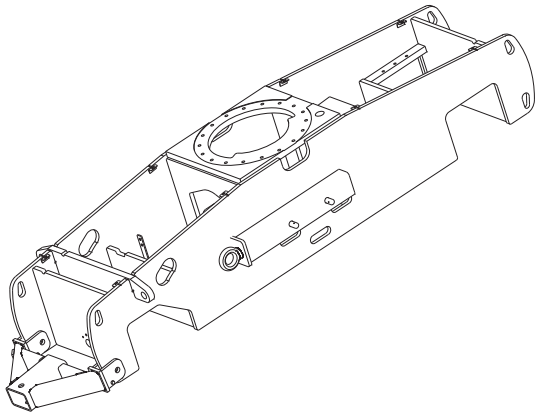

Transport and Lifting Instructions

Observe and Obey:

☑ Genie provides this securement information as a recommendation. Drivers are solely responsible for making sure machines are properly secured and the correct trailer is selected pursuant to US Department of Transportation regulations, other localized regulations, and their company policy.

☑ Genie customers needing to containerize any lift or Genie product should source a qualified freight forwarder with expertise in preparing, loading and securing construction and lifting equipment for international shipment.

☑ Only qualified aerial lift operators should move the machine on or off the truck.

☑ The transport vehicle must be parked on a level surface.

☑ The transport vehicle must be secured to prevent rolling while the machine is being loaded.

☑ Be sure the vehicle capacity, loading surfaces and chains or straps are sufficient to withstand the machine weight. Genie lifts are very heavy relative to their size. See the serial label for the machine weight.

☑ Be sure the turntable is secured with the turntable rotation lock before transporting. Be sure to unlock the turntable for operation.

☑ Do not drive the machine on a slope that exceeds the uphill, downhill or side slope rating. See Driving on a Slope in the Operating Instructions section.

☑ If the slope of the transport vehicle bed exceeds the maximum slope rating, the machine must be loaded and unloaded using a winch as described in the brake release operation.

Free-wheel Configuration for Winching

Chock the wheels to prevent the machine from rolling.

2WD models: Release the non-steer wheel brakes by turning over the drive hub disconnect caps.

4WD models: Release the wheel brakes by turning over all four drive hub disconnect caps.

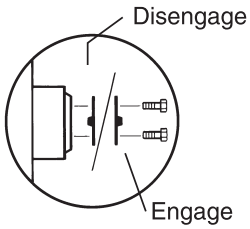

Be sure the winch line is properly secured to the drive chassis tie points and the path is clear of all obstructions.

Reverse the procedures described to re-engage the brakes.

Note: The pump free-wheel valve should always remain closed.

Transport and Lifting Instructions

Securing to Truck or Trailer for Transit

Always use the turntable rotation lock pin each time the machine is transported.

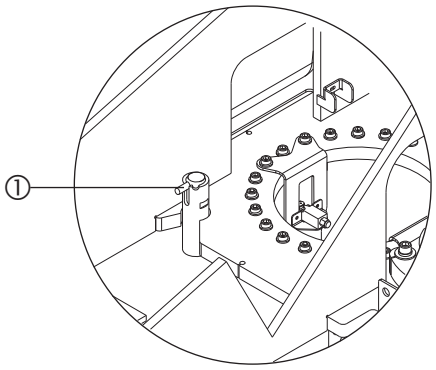

1 Turntable rotation lock pin

Turn the key switch to the off position and remove the key before transporting.

Inspect the entire machine for loose or unsecured items.

For diagram, refer to the Lifting Instructions.

Securing the Platform - S-60X

Place a block under the platform rotator. Do not allow the block to contact the platform cylinder.

Secure the platform with a nylon strap placed through the lower platform support. Do not use excessive downward force when securing the boom section.

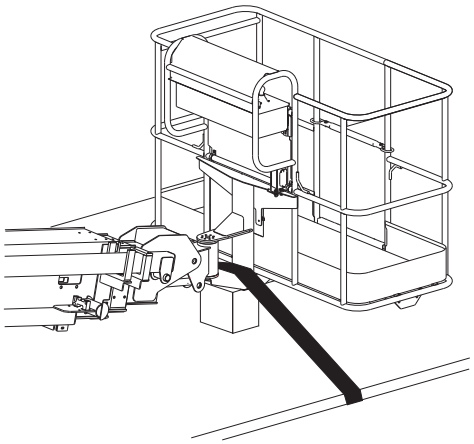

Transport and Lifting Instructions

Observe and Obey:

☑ Only qualified riggers should rig and lift the machine.

☑ Be sure the crane capacity, loading surfaces and straps or lines are sufficient to withstand the machine weight. See the serial label for the machine weight.

Lifting Instructions

Fully lower and retract the boom. Remove all loose items on the machine.

Use the turntable rotation lock to secure the turntable.

Determine the center of gravity of your machine using the table and the picture on this page.

Attach the rigging only to the designated lifting points on the machine. All four of the lifting points are on the turntable.

Adjust the rigging to prevent damage to the machine and to keep the machine level.

Center of gravity	X Axis	Y Axis
S-60X	4.13 ft	50.6 in
	1.25 m	1.28 m

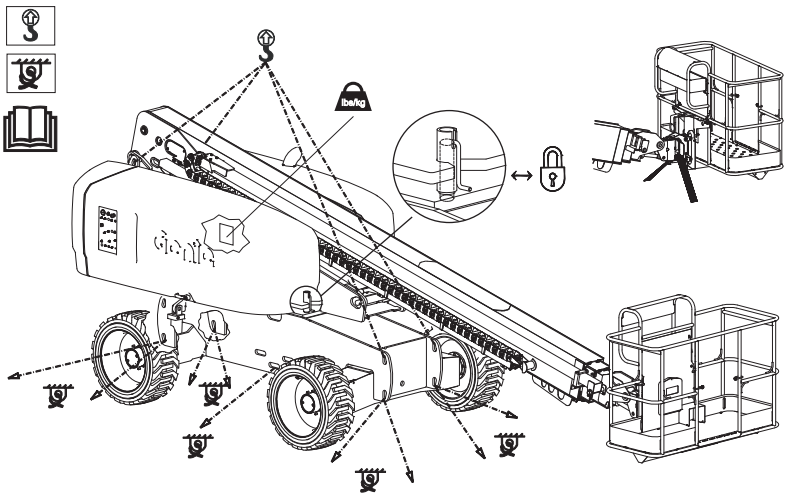

Maintenance



Observe and Obey:

☑ Only routine maintenance items specified in this manual shall be performed by the operator.

☑ Scheduled maintenance inspections shall be completed by qualified service technicians, according to the manufacturer's specifications and the requirements specified in the responsibilities manual.

☑ Use only Genie approved replacement parts.

Maintenance Symbols Legend

The following symbols have been used in this manual to help communicate the intent of the instructions. When one or more of the symbols appear at the beginning of a maintenance procedure, it conveys the meaning below.



Indicates that tools will be required to perform this procedure.



Indicates that new parts will be required to perform this procedure.



Indicates that a cold engine is required before performing this procedure.

Check the Engine Oil Level



Maintaining the proper engine oil level is essential to good engine performance and service life. Operating the machine with an improper oil level can damage engine components.

Note: Check the oil level with the engine off.

1 Check the oil level dipstick. Add oil as needed.

Ford DSG-423 EFI Engine	
Oil type	5W-20
Ford MSG-425 EFI Engine	
Oil type	5W-20
Perkins 404C-22 Engine	
Oil type	15W-40
Oil type - cold conditions	5W-20
Perkins 404D-22 Engine	
Oil type	15W-40
Oil type - cold conditions	5W-40
Perkins 404F-22T Engine	
Oil type	15W-40
Oil type - cold conditions	5W-40
Deutz F3L 2011F Engine	
Oil type	15W-40
Oil type - cold conditions	5W-40
Deutz D2.9 L4 Engine	
Oil type	15W-40
Oil type - cold conditions	5W-30

Maintenance

Check the Hydraulic Oil Level

Maintaining the hydraulic oil at the proper level is essential to machine operation. Improper hydraulic oil levels can damage hydraulic components. Daily checks allow the inspector to identify changes in oil level that might indicate the presence of hydraulic system problems.

1 Be sure that the boom is in the stowed position.

2 Visually inspect the sight gauge located on the side of the hydraulic oil tank.

⊙ Result: The hydraulic oil level should be within the top 2 inches / 5 cm of the sight gauge.

3 Add oil as needed. Do not overfill.

Hydraulic oil specifications	
Hydraulic oil type	Chevron Rando HD equivalent

Check the Engine Coolant Level – Liquid Cooled Models

Maintaining the engine coolant at the proper level is essential to engine service life. Improper coolant level will affect the engine's cooling capability and damage engine components. Daily checks will allow the inspector to identify changes in coolant level that might indicate cooling system problems.

⚠ Burn hazard. Beware of hot engine parts and coolant. Contact with hot engine parts and/or coolant may cause severe burns.

⚠ Burn hazard. Do not remove the radiator cap if the engine has been running. Contact with pressurized coolant may cause severe burns. Allow engine to cool before removing the radiator cap.

1 Check the fluid level in the coolant recovery tank. Add fluid as needed.

⊙ Result: The fluid level should be at the FULL mark on the tank or visible in the sight gauge.

Check the Batteries

Proper battery condition is essential to good machine performance and operational safety. Improper fluid levels or damaged cables and connections can result in component damage and hazardous conditions.

⚠ Electrocution hazard. Contact with hot or live circuits may result in death or serious injury. Remove all rings, watches and other jewelry.

⚠ Bodily injury hazard. Batteries contain acid. Avoid spilling or contacting battery acid. Neutralize battery acid spills with baking soda and water.

1 Put on protective clothing and eye wear.

2 Be sure that the battery cable connections are tight and free of corrosion.

3 Be sure that the battery hold-down brackets are in place and secure.

Note: Adding terminal protectors and a corrosion preventative sealant will help eliminate the corrosion on the battery terminals and cables.

Diesel Fuel Requirements

Satisfactory engine performance is dependent on the use of a good quality fuel. The use of a good quality fuel will give the following result: long engine life and acceptable exhaust emissions levels.

Minimum diesel fuel requirements for each engine are listed below.

Perkins 404D-22 Engine	
Fuel Type	Low Sulfur Diesel (LSD)
Perkins 404F-22T Engine	
Fuel Type	Ultra Low Sulfur Diesel (ULSD)
Deutz D2011 L03i Engine	
Fuel Type	Low Sulfur Diesel (LSD)
Deutz D2.9 L4 Engine	
Fuel Type	Ultra Low Sulfur Diesel (ULSD)

Maintenance

Scheduled Maintenance

Maintenance performed quarterly, annually and every two years must be completed by a person trained and qualified to perform maintenance on this machine according to the procedures found in the service manual for this machine.

Machines that have been out of service for more than three months must receive the quarterly inspection before they are put back into service.

Specifications

Model		S-60X
Height, working maximum	64 ft 4 in	19.79 m
Height, platform maximum	58 ft 4 in	17.79 m
Height, stowed maximum	8 ft 11 in	2.72 m
Horizontal reach, maximum	50 ft 10 in	15.5 m
Horizontal reach, restricted	40 ft 8 in	12.4 m
Width	8 ft 6 in	2.59 m
Length, stowed	27 ft 11 in	8.5 m
Maximum platform capacity, unrestricted range of motion	500 lbs	227 kg
Maximum load capacity, restricted range of motion	1000 lbs	454 kg
Maximum wind speed	28 mph	12.5 m/s
Wheelbase	8 ft 2.5 in	2.5 m
Turning radius (outside)	22.3 ft	6.8 m
Turning radius (inside)	12 ft	3.66 m
Turntable rotation (degrees)		Continuous
Turntable tailswing	4 ft	1.22 m
Controls		12V DC proportional
Platform dimensions, 6 foot (length x width)	72 x 30 in	182 x 76 cm
Platform dimensions, 8 foot (length x width)	96 x 36 in	244 x 91 cm
Platform leveling		self-leveling
Platform rotation		160°
AC outlet in platform		standard
Ground clearance, center	14.5 in	36.8 cm
Ground clearance, axle	13 in	33 cm
Fuel tank capacity, gasoline	30 gallons	114 liters
Fuel tank capacity, diesel	35 gallons	132 liters
Hydraulic pressure, maximum (boom functions)	3000 psi	207 bar
System voltage		12V
Weight	20,742 lbs	9408 kg
(Machine weights vary with option configurations. See serial label for specific machine weight.)		

Maximum slope rating, stowed position, 2WD		
Counterweight uphill	30%	17°
Counterweight downhill	10%	6°
Side slope	25%	14°
Maximum slope rating, stowed position, 4WD		
Counterweight uphill	45%	24°
Counterweight downhill	30%	17°
Side slope	25%	14°

Note: Slope rating is subject to ground conditions and adequate traction.

Drive speeds		
Drive speed, stowed, 2WD	4.0 mph 40 ft/6.2 sec	6.4 km/h 12.2m/6.2 sec
Drive speed, stowed, 4WD	3.0 mph 40 ft/7.2 sec	4.8 km/h 12.2m/7.2 sec
Drive speed, raised or extended – all models	0.7 mph 40 ft/40 sec	1.1 km/h 12.2 m/40 sec
Floor loading information		
Track load maximum	11,640 lbs	5280 kg
Track contact pressure	70 psi	4.92 kg / cm^2 483 kPa
Occupied floor pressure	234 psf	1140 kg / m^2 11.195 kPa

Note: Floor loading information is approximate and does not incorporate different option configurations. It should be used only with adequate safety factors.

Continuous improvement of our products is a Genie policy. Product specifications are subject to change without notice or obligation.

Specifications

S-60X Range of Motion

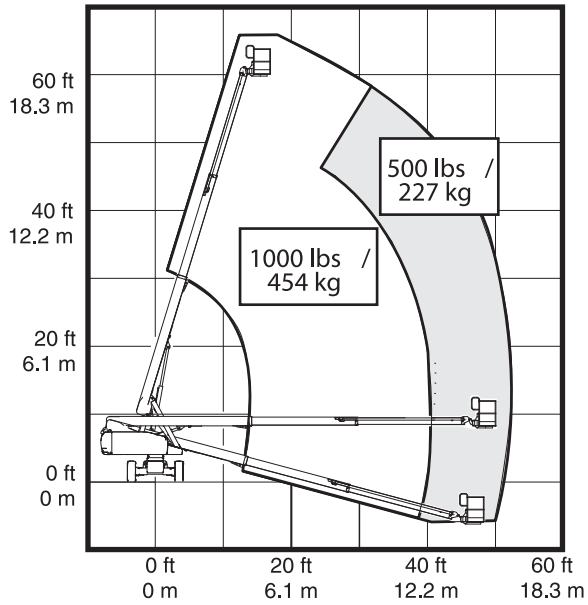

California Proposition 65

WARNING

Operating, servicing and maintaining this equipment can expose you to chemicals including engine exhaust, carbon monoxide, phthalates, and lead, which are known to the State of California to cause cancer and birth defects or other reproductive harm. These chemicals can be emitted from or contained in other various parts and systems, fluids and some component wear by-products. To minimize exposure, avoid breathing exhaust, do not idle the engine except as necessary, service your equipment and vehicle in a well-ventilated area and wear gloves or wash your hands frequently when servicing your equipment or vehicle and after operation. For more information go to www.P65Warnings.ca.gov/passenger-vehicle.

Breathing diesel engine exhaust exposes you to chemicals known to the State of California to cause cancer and birth defects or other reproductive harm.

- Always start and operate the engine in a well-ventilated area.
- If in an enclosed area, vent the exhaust to the outside.
- Do not modify or tamper with the exhaust system.
- Do not idle the engine except as necessary.

For more information go to www.P65warnings.ca.gov/diesel.

Distributed By: