COVER MORE

MODEL: C4040

INSTALLATION MANUAL

STEP 1: Container Positioning
STEP 2: Assemble Base Rails
STEP 2: Frame Assembly
STEP 3: Cover Installation

www.covermorebuildings.com 918-476-0590 sales@covermorebuildings.com

Congratulations on your purchase of our instant shelter.

This unit is a combination of excellent manufacturing and design. It is comprised of a rigid frame and a durable cover. For easy assembly, we have marked all the parts with codes. With proper installation, use and maintenance, your unit will provide many years of good and suitable service.

TIPS – Please Read First!

- Ensure that the area where you are installing your shelter is nice and flat and that your containers are level. This step is extra important if you happen to be installing end walls with your shelter. It'll ensure the end wall fits properly (no visible gaps around the frame or at the bottom) and that it sits straight and will prevent it from getting damaged.
- We recommend keeping the cover wrapped and rolled up until you need it. This will keep the cover clean and free of dirt and debris. We also recommend putting a drop sheet or some plastic down first when you are ready to roll out the cover.
- Where possible, place all screws and bolts in a position where they will not come into direct contact with the cover.
- Apply a protective layer (i.e., duct tape) over any joins, screws/bolts, and sharp edges. This extra step will be added protection and will prevent damage of the cover when it's pulled over in the next stage. It is also a good idea to apply a continuous length of duct tape along the front and rear edges of the curved frames. Remember to also cover the screws or bolts for your end wall frame and your cover pipes.
- If you have ordered end walls with your shelter, we recommend installing these first.
- You must install your your shelter on a day with no wind. The cover can act like a sail, so wind gusts can result in the cover moving around or even blowing away. When installing, make sure you keep hold of the cover at all times until it is fully secured. This will help prevent damage and prevent the cover from blowing away.

****** READ ALL THE INSTRUCTIONS BEFORE ASSEMBLY ! ******

1. The proper erection and installation of this building requires a high level of care and safety. We recommend the safety regulations be complied with during the installation. It includes but is not limited to:
   - Safety hats, protective eyewear and protective clothing
   - Safety harnesses for all elevated workers
   - Proper ladder, cage, and safety operation
2. Site selection: Choose a solid level location for your building. Do not install the building where the ground could not keep the building steady. Do not install the building where the ground could not bear the weight of the building. Do not install the building in soft grass ground or wetland.
3. Be cautious with the surroundings. Keep work area clean. Do not set up it near snow drifts, in slippery places, or in wet location. The cover of the building will protect against normal falling leaves and light debris, however, large, fast or sharp falling items etc. may cause a puncture or tear in the cover material. So, keep the building away from such harmful things. Be careful with power and heat sources. Do not keep heat sources near the tarpaulin. Do not expose to open flame.
4. All snow accumulation on the main cover should be removed as soon as possible. Otherwise, when old snow on the roof becomes hard with new snow falling in, it will increase the burden of the roof and will damage the roof.

5. Try to keep the building, especially its base, in a dry condition. This will help the building to have a longer life than keeping it in wet conditions.
6. The user should be responsible for the parts missing or damage occurred during the installation.
7. Do not make any alterations of the frame. Do not hang anything besides included parts to the frame. Damages, consequential damages, or injuries caused by improper installation, alteration, improper use, or damages caused by snow, wind, or any acts of nature are owing to the user.

TOOLS REQUIRED:

- 17’ extension ladders – 2
- 5/8” tungsten drill bits – 4
- Silicone lubricant
- Ratchet wrenches – several with varying socket sizes
- Large flat head screwdriver
- Suggested: Hi-lift (rental) for cross truss support beam emplacement and for wrapping end ropes through outside trusses
- Suggested: Forklift – all terrain for lifting arched hoops into place and for any final positioning of containers
- 5 ropes of at least 75’ long – used to pull tension bars across and over the trusses; one for each truss

ASSEMBLY PROCEDURE:

1. Prepare location and place all unit boxes near location sight. Perform an inventory check before beginning, to be certain all components are available for installation.
2. Secure base plates flanges to base surface.
3. Assemble every group of arches.
4. Begin frame assembly with front end arch, first interior arch, purlins, etc.
5. Add to assemble other groups of arches.
6. Install main cover over frame.
7. Install end covers over end panels.
8. Read all the detailed instructions and notices in the following assembly instructions!

MAINTENANCE AND CARE:

1. If some parts or the cover were accidently damaged during the use, contact the local supplier for advises on the repairing method or replacements, so that to prevent from further damage and keep the building in a good condition.
2. When replacing the parts, make certain the whole frame and the parts connected to the replaced parts be well fixed or supported.
3. To extend the life of the cover, put small duct tape or foam rubber (provided by yourself) on the frame that comes to in contact with cover. The tape and foam rubber acts as a cushion to avoid rubbing damage to the cover over years.
4. Periodically (at least every 6 months), the building should be completely inspected and maintained internally and externally to make certain the building remains properly installed and secured. Including: check all bolts and hardware connectors to be certain they are in place and tightened, the base plates are still fixed firmly, check and adjust the ropes if in need, clean the cover with suitable washing. Allowing dirt and debris to sit on cover over an extended time will damage cover.
5. All snow accumulation on the main cover should be removed as possible. Tap the main cover from the inside with a broom or soft brush to clear cover.
6. The poly rope that secures the main cover to the bottom rail of the frame assembly should be checked and adjusted as needed. The tension on the main cover should be uniform from end to end and side to side.
7. Cleaning the cover – cover and doors can be cleaned with a mixture of light detergent and water using a soft bristle brush to loosen any hard dirt or buildup on the cover. Rinse thoroughly to avoid any chemical reaction from residual detergent.

8. Severe Weather – secure the door of your portable building when possible, allowing wind to enter ends puts pressure on the cover.

CODE	PARTS LIST	QUANTITY
1	Top roof tube	7
2	Upper roof curving tube	14
3	Lower roof curving tube	14
4	Sidewall tube	14
5	Horizontal tube	30
L1	Base flange in left corner at front panel	1
L2	Base flange in left side middle of sidewall	4
L3	Base flange in left corner at back panel	1
R1	Base flange in right corner at front panel	1
R2	Base flange in right side middle of sidewall	4
R3	Base flange in right corner at back panel	1
6	Plate for base flange connected	20
8	Door dropping tube	12+2
9	Hexagon bolt M10X90	115
10	Carriage bolt M10X110	52
10A	Hexagon bolt M10X110	50
11	Plastic cap	4+4
12	Roof cover	1
13	Band for tie down ratchet	14
14	Rope for fastening roof cover, and optional door and end walls	4
15	L type steel for rope	4

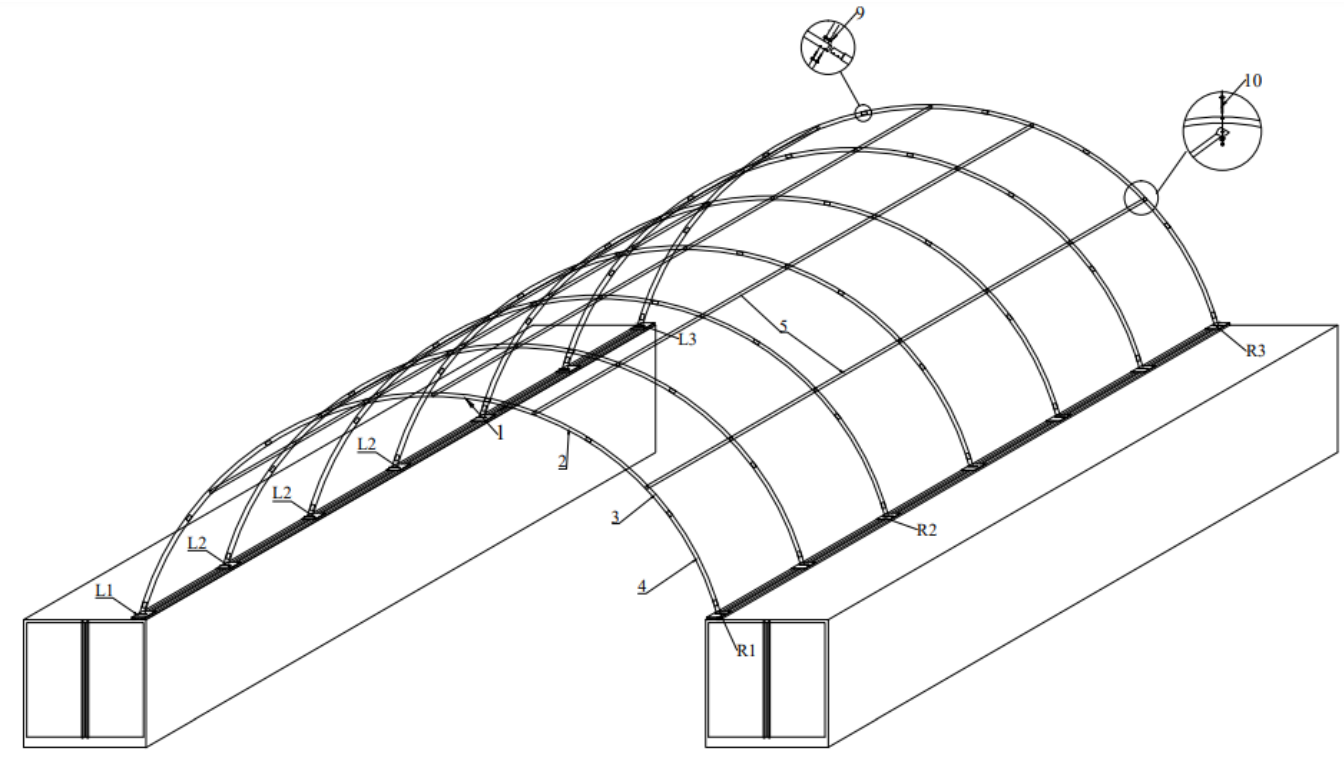

STEP 1 – CONTAINER POSITIONING:

1. Ensure the site is level and firm.
2. Place the containers 38 ft., 6 in. apart.

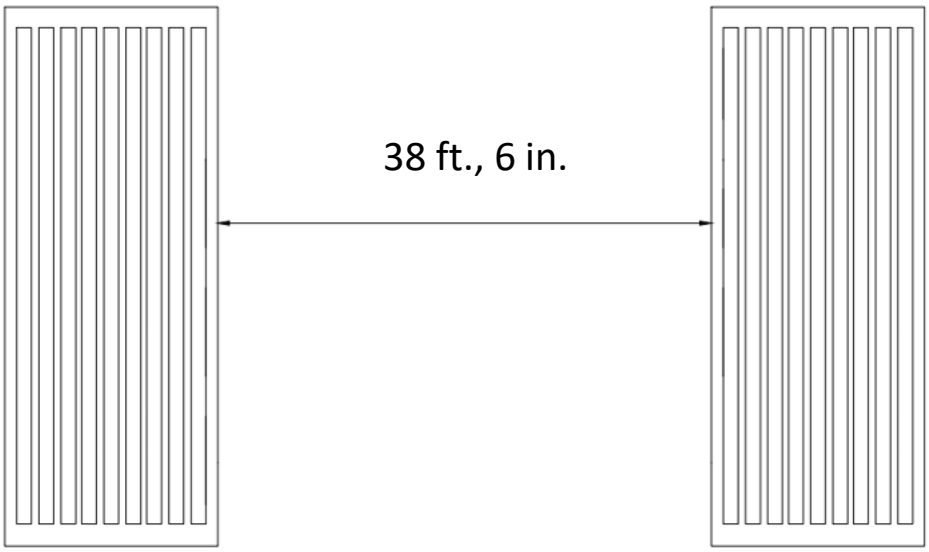

3. Square the containers by checking diagonal dimensions, see below image.

To square the corners, ensure that both diagonal dimensions between the containers are equal, as shown in the diagrams below.

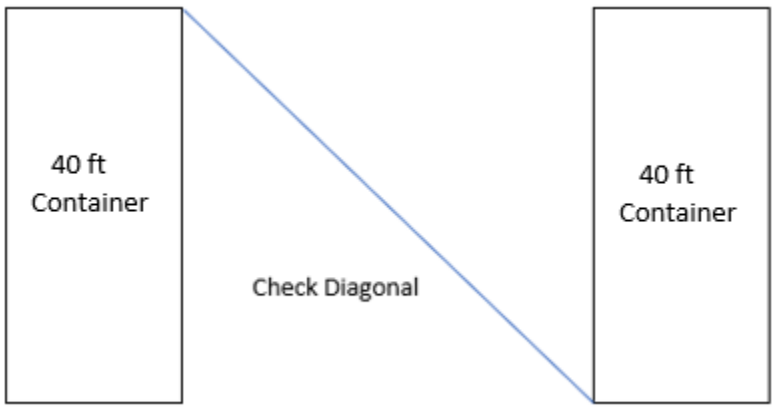

NEXT:

Position container shipping box near the container which will have the roof cover fabric on it to start the process. Using a

forklift, remove the roof fabric bundle and place it on one of the roofs, then unfold it along the length of the container. Locate the topmost exposed tension bar sleeve sewn into the roof (about 12-16” from the bottom apron edge) and assemble and thread a tension bar through the sleeve. **Before doing so,** place one of the black plastic end caps on the lead so it won’t tear the fabric.

Remove and inventory the remaining structural items and parts.

STEP 2 – ASSEMBLE THE BASE RAILS:

1. Connect the Base Rail (L1, L3, R1, R3, L2, R2) by connector part (#7A) and bolt part (#10A)
2. Fix the assembled base rail onto the container by clamp set part (#9A) at the end of base rail by bolt part (#10A)

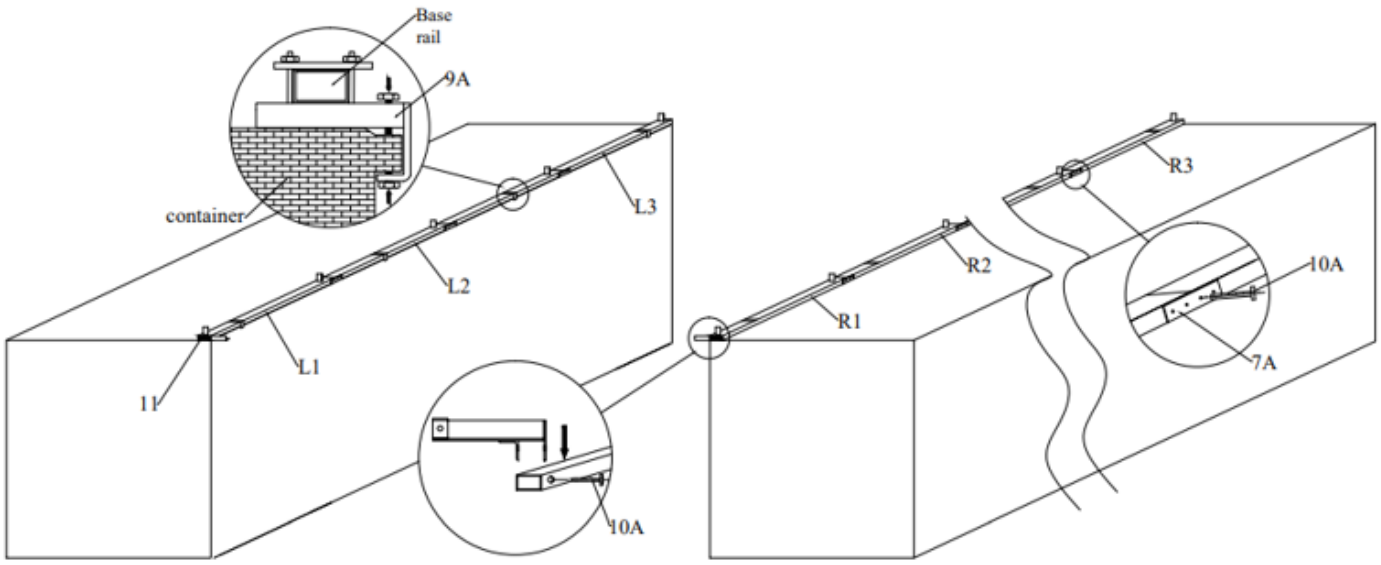

STEP 3 – FRAME ASSEMBLY:

1. Assemble <u>ALL arches on the ground</u> first
2. Assemble parts #1, #2, #3, #4 and bolt portal legs together using bolt part #9

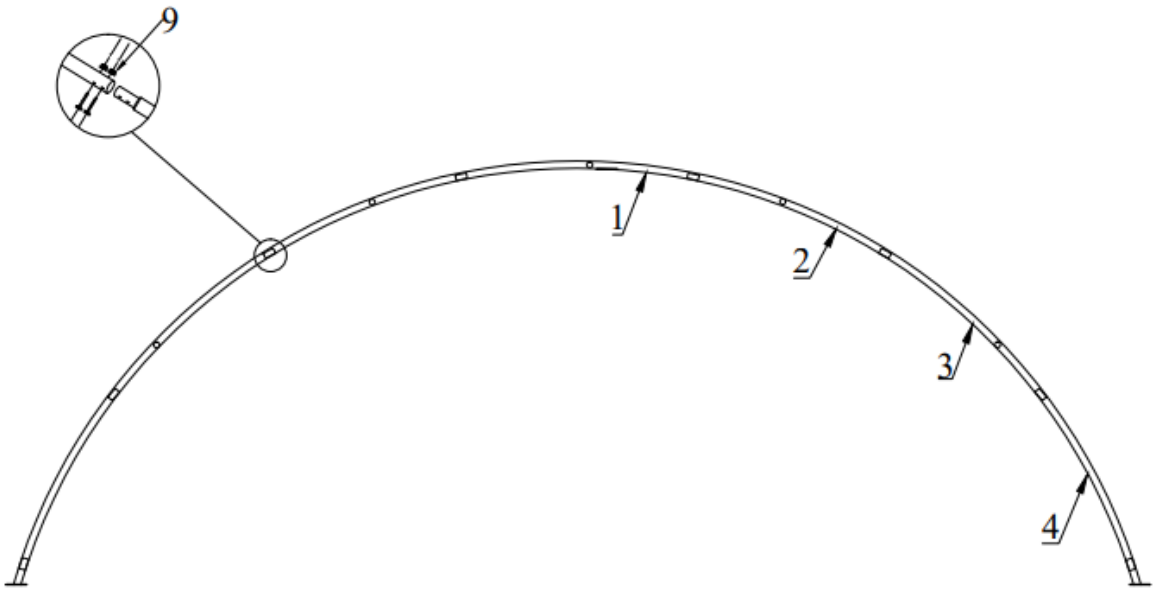

FRAME ASSEMBLY CONTINUED:

1. Connect all the portals after they have been lifted up and secured into the base plates using purlins part #5 and bolts part #10.

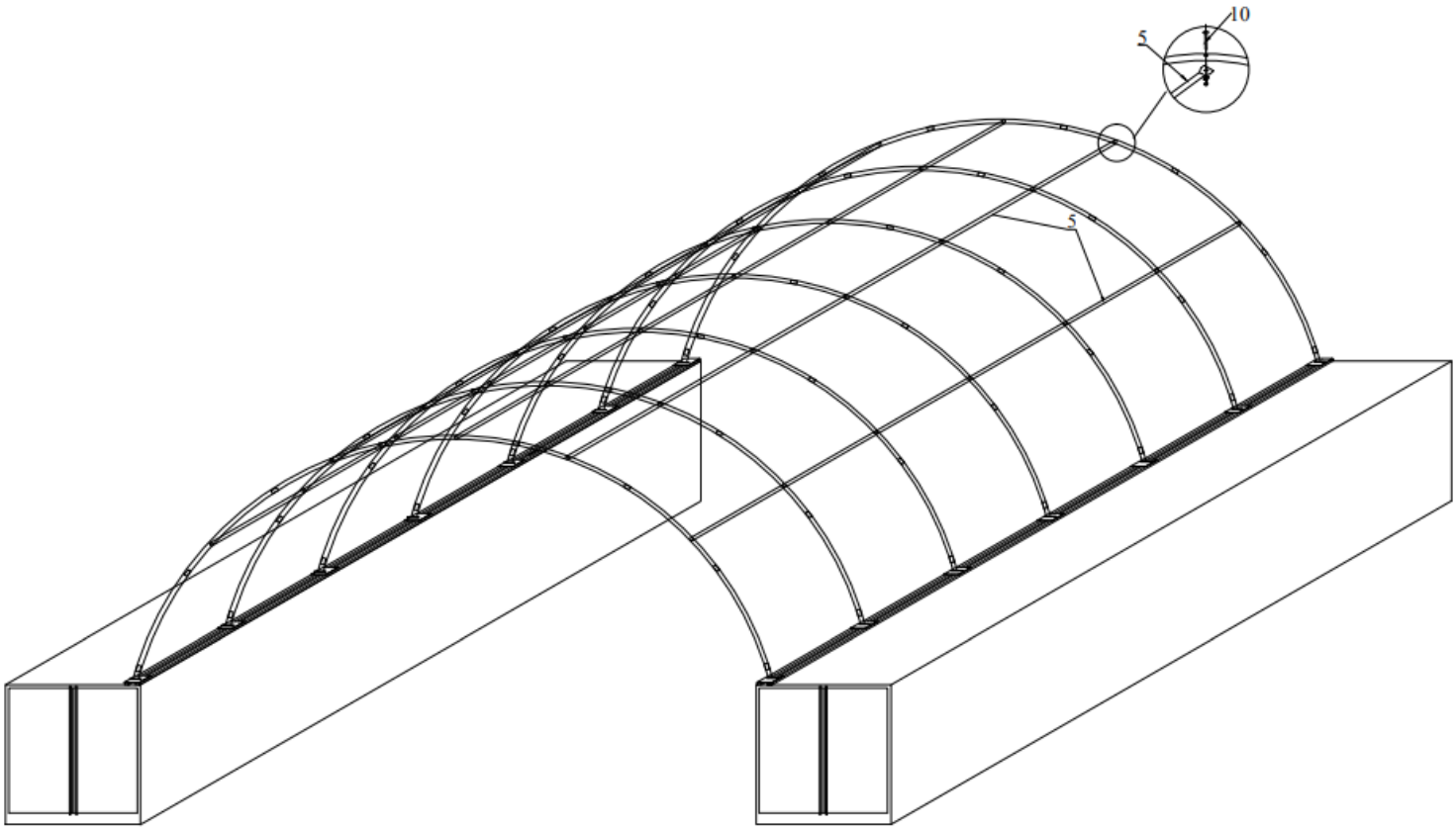

STEP 4 – COVER INSTALLATION:

NOTE: When installing the cover, apply tension in the longitudinal direction first (front to back of shelter). Then apply tension to the sides or the lateral direction second. This is key to ensuring the cover is centered, and that there's even overhang on each end. It's difficult to get the cover over each arch if the sides have tension applied. The longitudinal direction should also take the greatest pressure. When observed from the outside, the fabric should be firm without any crinkles and look mostly flat between the frames. We also recommend repeating tensioning again after a few weeks, after the cover has had time to settle. A well tensioned cover will have a longer lifespan!

1. Slide the cover over the frame from one side to the other, not end to end.
2. Tension the ends FIRST by pulling and tensioning the ends of the cover using the nylon rope already threaded through the cover. Tension evenly at both ends and tie off securely.
3. Insert lower tensioning tube part #8 into the sleeves of the cover.
4. Push tube to very end of sleeve. Feed tube back into sleeve end (center the tube in sleeve).
5. Insert nylon band over tube. Feed ends into tie down ratchet as drawing. <u>Do not fully tension yet.</u>
6. Put the plastic cap (#11) into the two ends of cover tensioning tube.

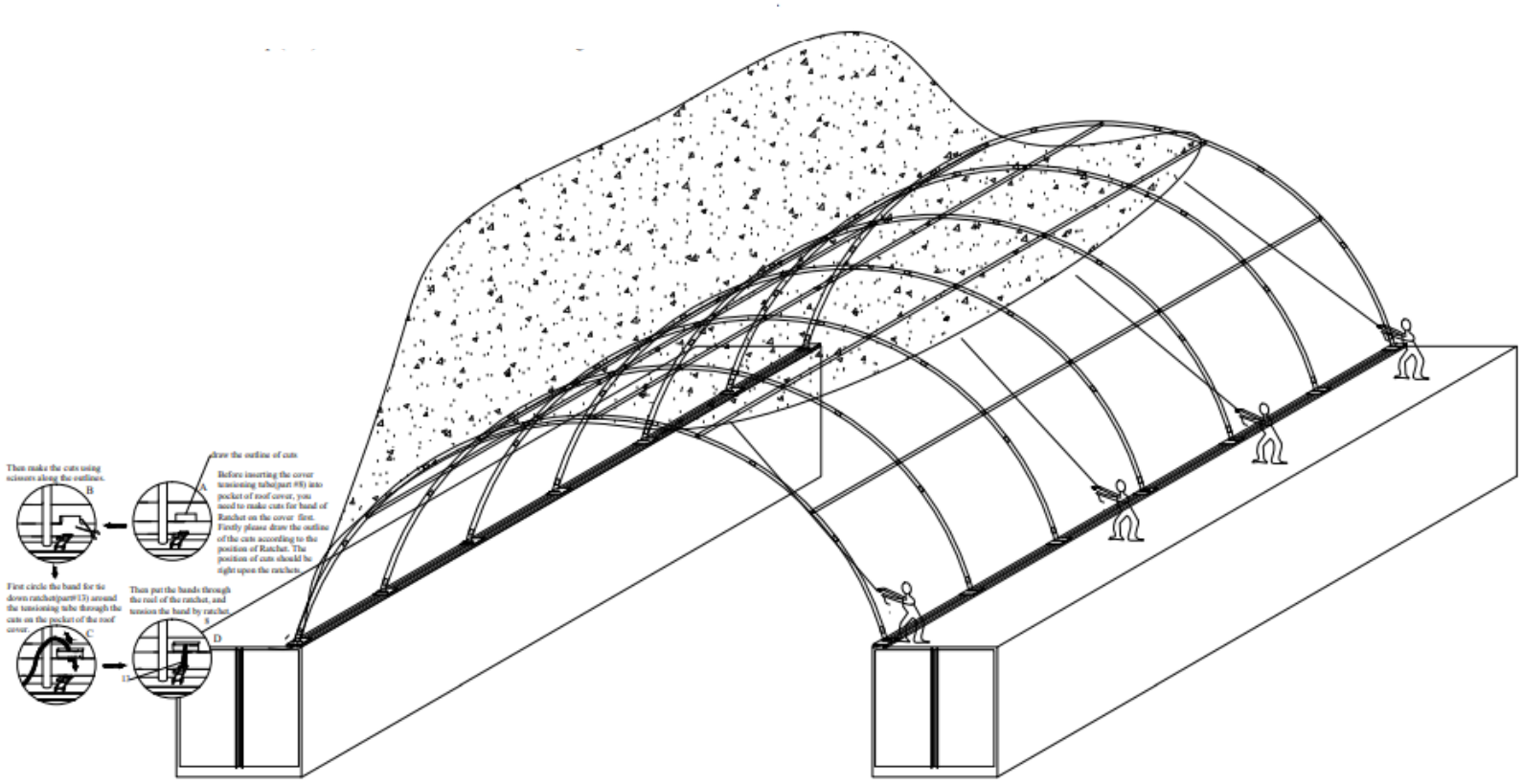

COVER INSTALLATION CONTINUED:

1. Lace cover to end arches through eyelets, then fully tension
2. Fully tension tie down evenly on each side
3. Tension the nylon webbing again and tie them off to the 4 small flanges (part #15)
4. Double check all knots are secure, and cover is well tensioned and stretched onto frame.

NOTE: The cover should always be well tensioned! If there is any damage to the straps and ropes, they should be replaced/repaired asap, to prevent any further damage to cover.

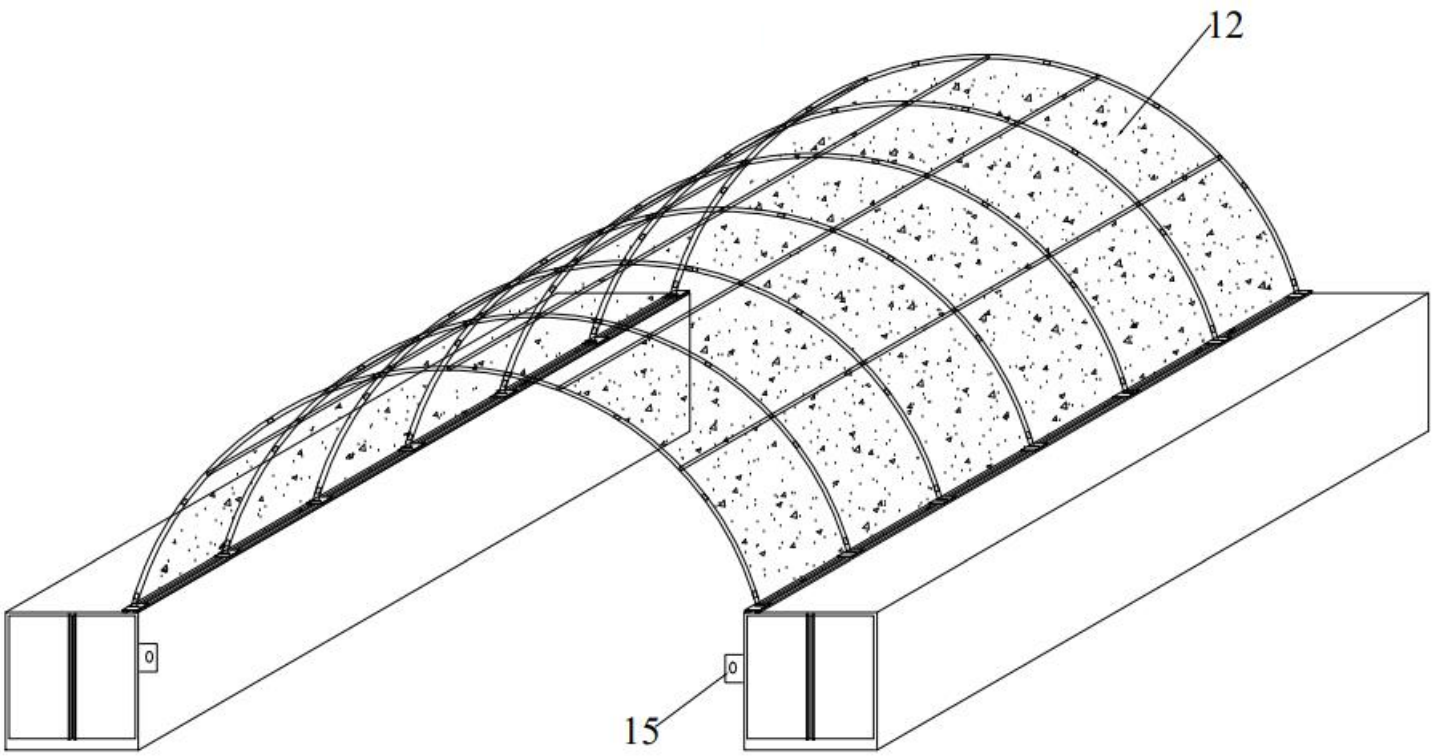

NOTES: