# SHELTER

# ASSEMBLYMANUAL

## Container Shelter

Model #C2020/W6mx L6mx H2m

Model#C2040/W6mxL12mxH2m



# Parts List

| Part Code | Description | C2020 Qty | C2040 Qty |
|---|---|---|---|
| L1 | Female square tube base plate used for corner (with screw) | 2 | 2 |
| L2 | Male square tube base plate used for corner (with screw) | 2 | 2 |
| R1 | Square tube at middle (with screw) | 4 | 12 |
| 1 | Three way fitting | 2 | 2 |
| 2 | Four way fitting | 3 | 7 |
| 3 | Top bent tube | 10 | 18 |
| 4 | Sidewall bent tube | 10 | 18 |
| 5 | Top roof purlin | 4 | 8 |
| 6 | Connection purlin | 16 | 32 |
| 7 | Lower tension tube for roof cover | 2groups | 2groups |
| 7A | Tie down ratchet | 10 | 18 |
| 7B | Band for Tie down ratchet | 10 | 18 |
| 8 | Angle iron | 4 | 4 |
| 9 | Roof cover | 1 | 1 |
| 10 | Round plastic cap used for lower tensioning tube ( No. 7 ) | 4 | 4 |
| 11 | Ropes | 1 dozen | 1 dozen |
| 12 | Plastic Plug 30*50 mm used for square tube ( No. L1 & L2 ) | 4 | 4 |
| 13 | Bolt M8x70mm | 90 | 162 |
| 14 | Butterfly bolt | 8 | 16 |
| 15 | Connector used for fixing square tubes (with screw and clip) | 6 | 10 |
| 16 | Bolt 10*60mm used for fixing square tube | 6 | 14 |

## SPECIFICATION

Width: 6m Height: 2m Length: 6m/12m

## IMPORTANT-----READ MANUAL FIRST

Improper site preparation, Assembly and Maintenance may invalidate warranty and cause unnecessary and costly mistake. If you have any questions contact your local dealer.

For User Friendly assembly we have identified each individual component with the part code as indicated in the parts list. Please refer to the part code numbers and drawing to ensure problem free assembly.

It's necessary to tighten the roof fabric enough to avoid "hammocks" on the roof and also re-tighten once or twice again after a few months of use. This is important when assembly in cold weather (autumn and winter) because the fabric is stiff then and when we got the sun and warm weather afterwards it will make the fabric "slack" again and need to be re-tighten before next winter.

It's the owners responsibility to take of snow immediately if not slide off by itself.

## READ ALL INSTRUCTIONS BEFORE ASSEMBLY

1. Keep work area clean. Cluttered areas invite injuries. Do not set up near snow drifts, in slippery places, in high winds, or wet location.
2. Keep children away. All children should be kept away from the work area.
3. Don't over reach. Keep proper footing and balance at all times.
4. Do not assemble in under the influence of alcohol or drugs. Read warning labels on prescriptions to determine if your judgment or reflexes are impaired while taking drugs. If there is any doubt, do not assemble.
5. Be aware of possible windy conditions; fasten the bases in concrete if these conditions are likely to occur. Remove the cover during hurricane.
6. Be careful with power and heat sources. Do not keep heat sources near the tarpaulin. Do not expose to open flame.
7. Be aware of personal safety during assembly and use. Be careful not to pinch fingers with clips and tubes when assembling: when using makes sure there is adequate ventilation for exhaust and other dangerous fumes.

## A --EQUIPMENT AND TOOLS FOR INSTALLATION

1. Measuring tape
2. String for alignment
3. Step ladder
4. Sledge hammer
5. Wrench
6. Scissors

## INSTALLATION PROCESS

## A—BASE INSTALLATION

Please refer to the diagram (Figure 1) to place the base plates.

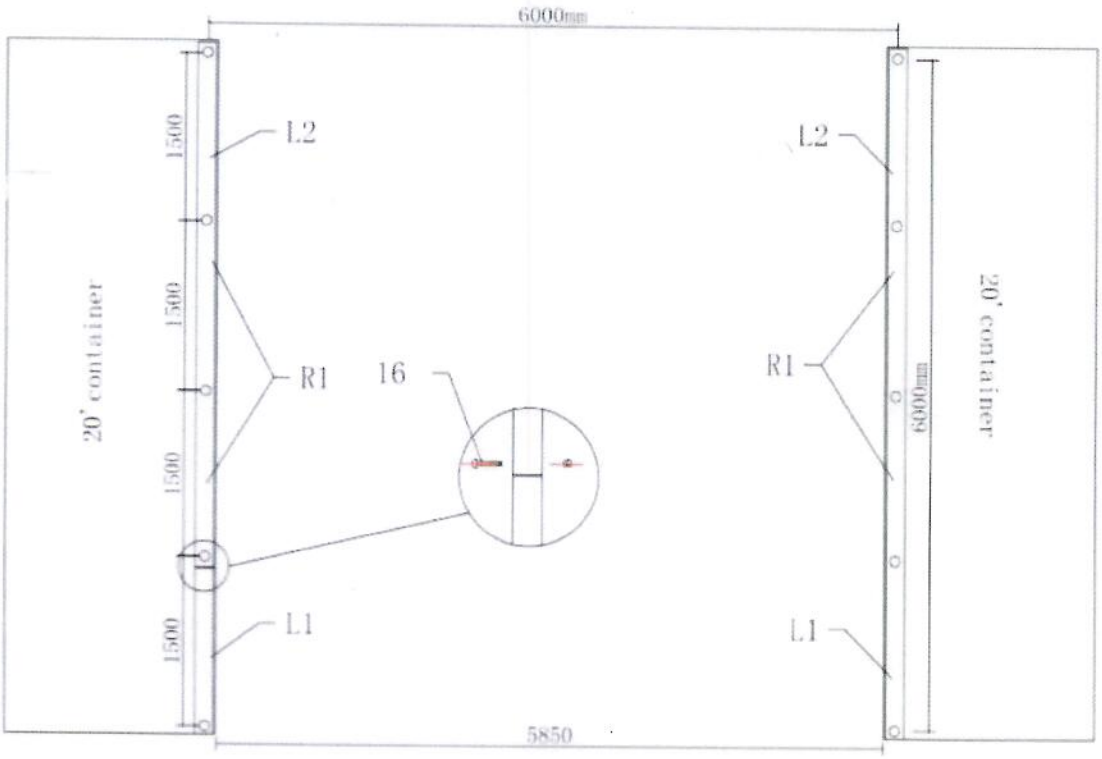

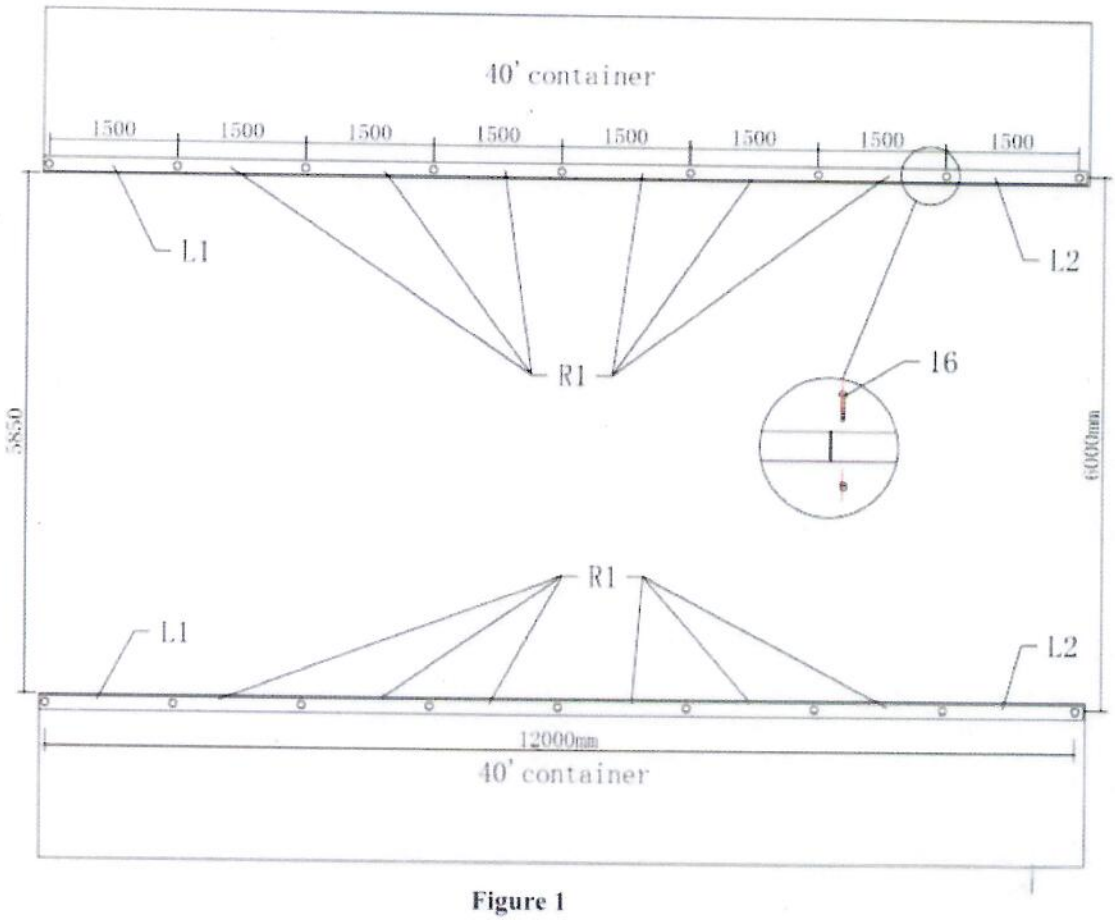


**Figure 1**

1. The measure is from center to center of the tubes. Referring to the above diagram and confirm the place of the base plates. ENSURE THAT THE FOUNDATIONS IS SQUARE.

2.Fix the base plate (No. L1/ L2 / R1) and Connecting pieces (No.15) by bolt (No. 16) according to Figure 1.

**Note:** The connector (NO.15) please refer to NO.A & NO.B ,the Base plate for inner arch frame please refer to NO.C & NO.D, the Base plate for corners please refer to NO.E & NO.F as below:

(A)




(B)



(C)

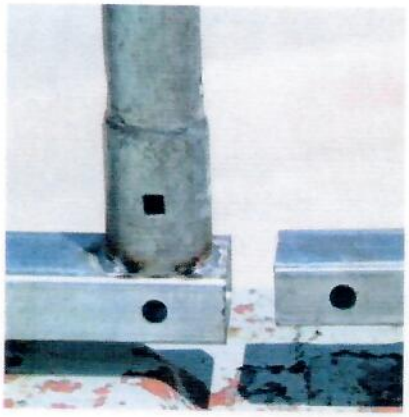

(D)



(E)

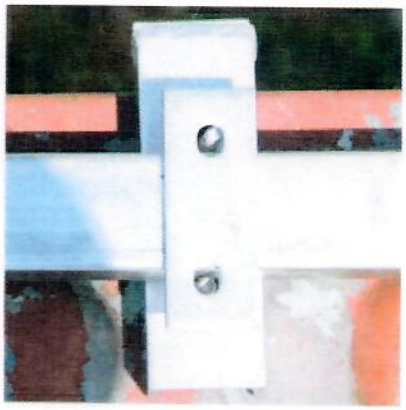

(F)

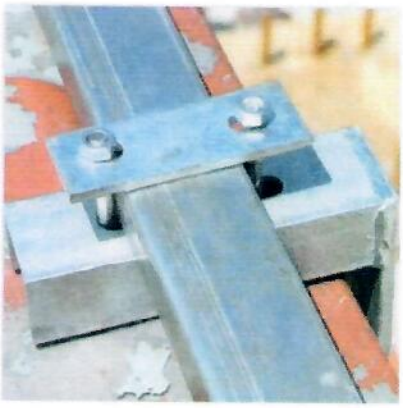

3. Insert the Plastic Plug 30*50 mm (No. 12) into the ends of square tube. ( No. L1 & L2 )

## B--FRAME INSTALLATION

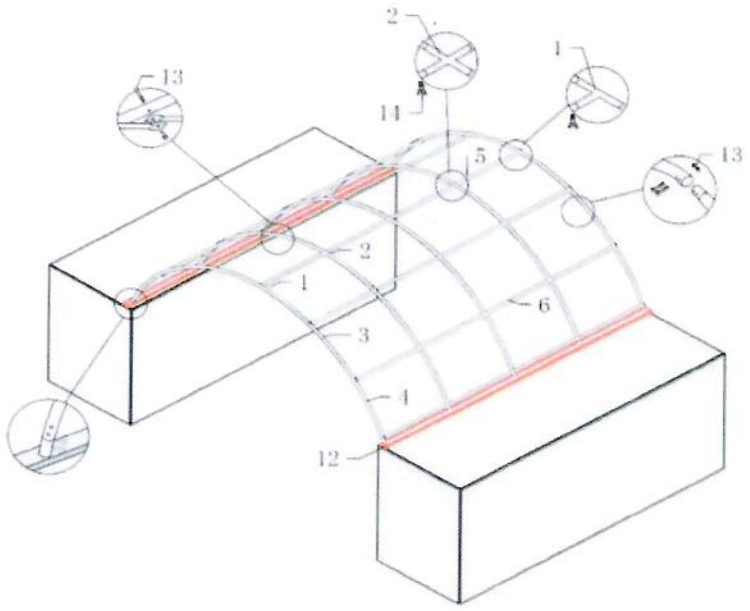


(C2020)

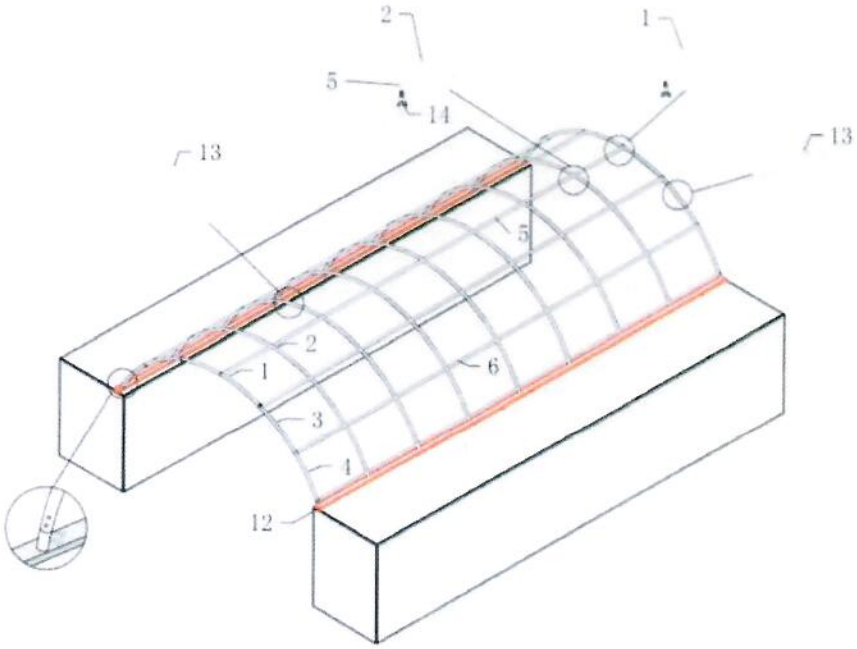


**Figure 2** ( C2040)

1. As Figure 2 shown find one piece of Three-way fitting (No. 1), two pieces of Top bent tube (No. 3) and two pieces of Sidewall bent tubes (No. 4). To connect them by Screw M8x70mm （No. 13） .Which makes one group of arch. Please NOTE the direction of the screw. DO NOT install the screws on the top of the truss where the fabric will rest.

2. Life an assembled arch into one base plate and force the other end of the arch into the opposite base plate.

3. When finishing the installation of first two arches, connect the Connection purlin between two arches by using screw M8x70（No. 13. There is 4 pieces of Connection purlins (part code 6)and 1 piece of Top roof purlin (part code 5) between each arch. Then install the third arch into base plate and connect the purlin. By turns the assembly for the frame is finished.

## C--INSTRUCTION FOR COVERATTACHED

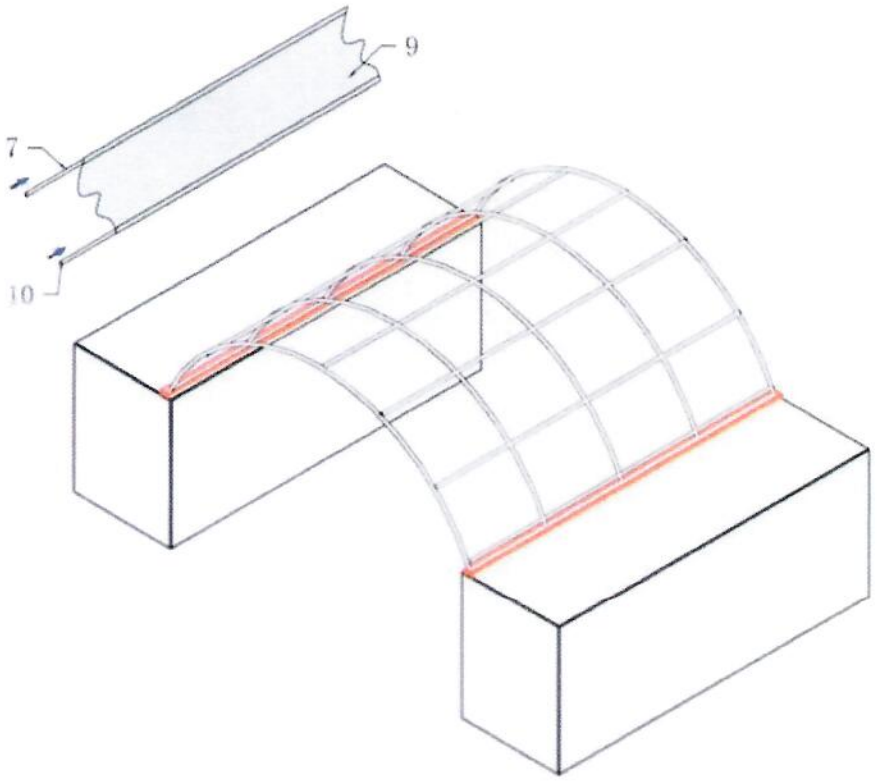


(C2020)

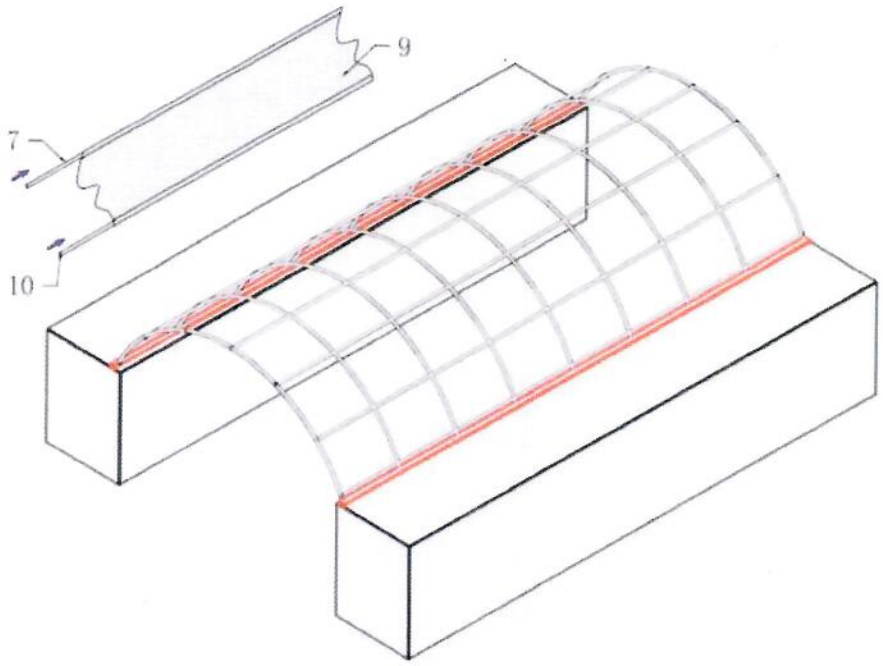


(C2040)

**Figure 3**

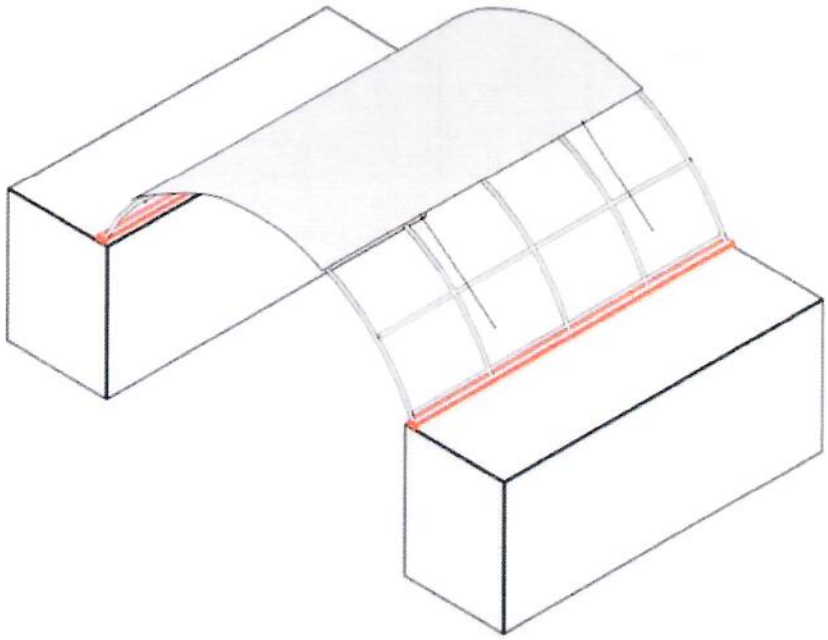

(C2020)

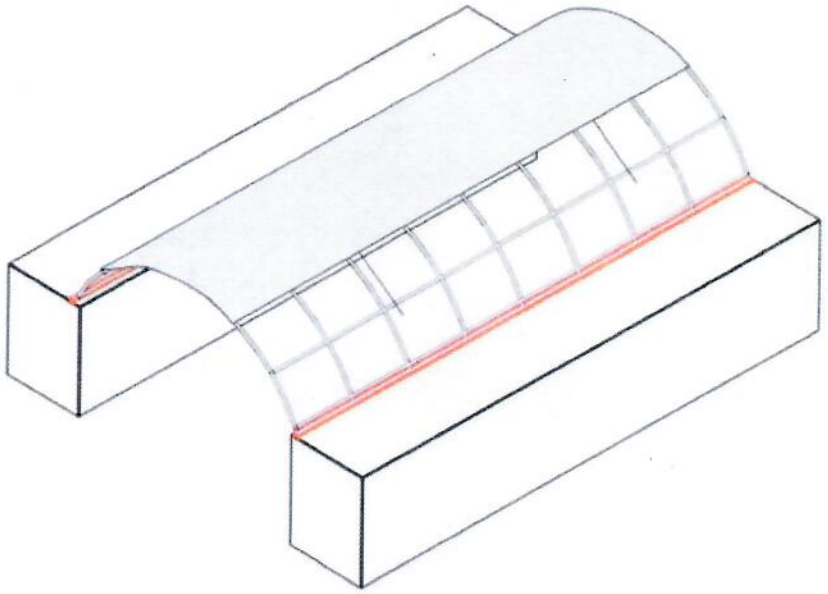

(C2040)

**Figure 4**

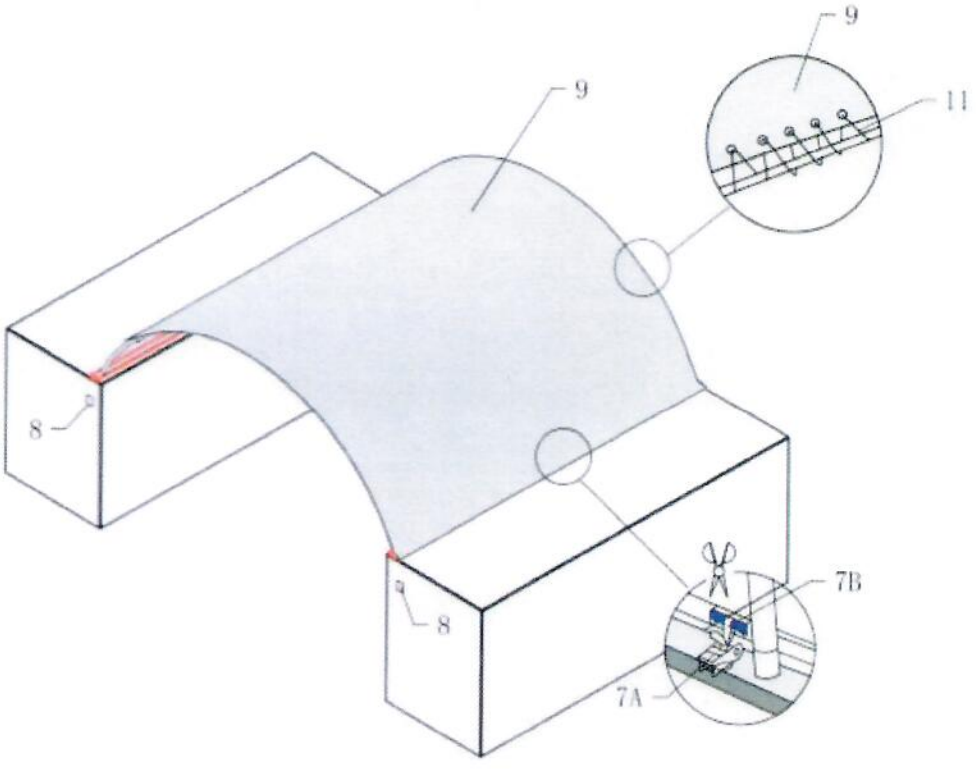


(C2020)

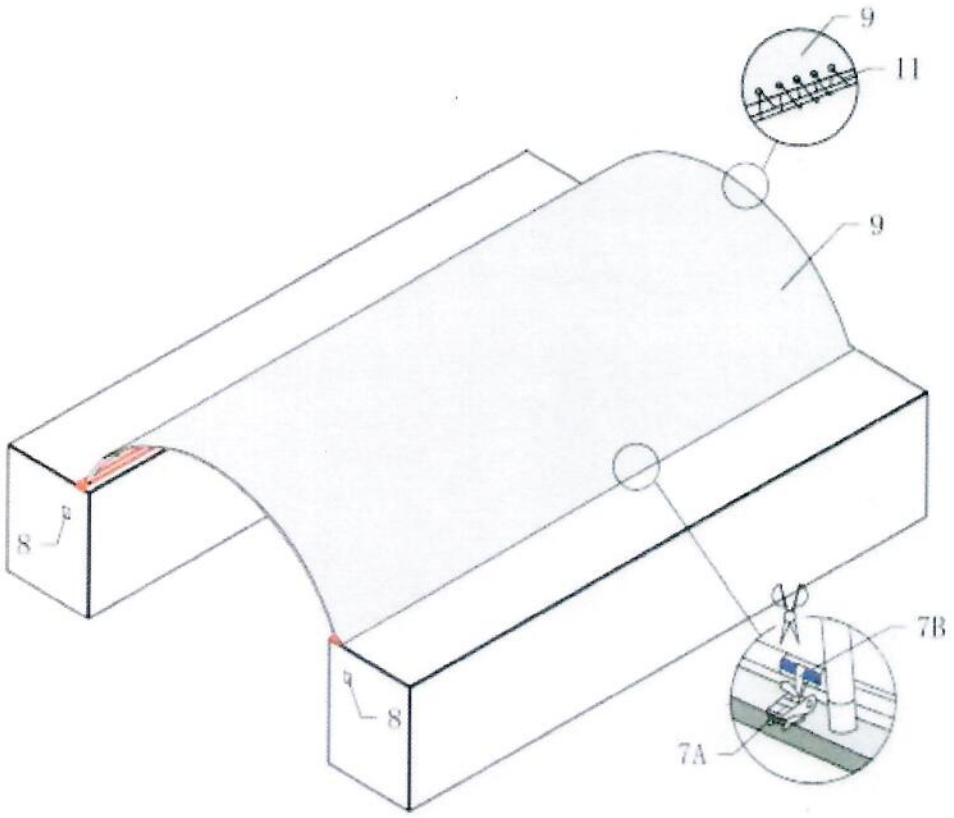


(C2040)

**Figure 5**

## Install the Roof Cover

NOTE: DO NOT install the cover onto the frame of your building in high wind conditions. A slight breeze is the most advantageous for cover installation. To take advantage of the breeze, pull the cover up over the arches with the breeze blowing in the cover like a sail filled with air.

1. Put the Roof cover (No. 9) EVENLY, CARFULLY AND SLOWLY on the frame. Adjust the cover so that it is square and evenly centered on the frame.
2. Weld the Angle seats (No. 8) on each container and use Rope (No. 11) to knit the cover on the two side arches, finally tie the Roof cover to the Angle seats.
3. Cut pockets according to the position of the base plates and put the Lower Tension tubes for roof cover (No. 7) into the pocket of roof cover. Then use the Rope (No. 11) to tie down the Lower tension tubes like the Figure
4. Finally install the Plastic plug for base rail section (part code 10) into two

end of the Lower tension tubes.

NOTE: DO NOT LEAVE THE ROOF COVER UNATTACHED UNDER ANY CIRCUMSTANCES until the final assembly and tightening has been completed. The process is quite easy. But some tightening adjustments will be necessary to produce a flat, tensioned roof cover. Please adjust the roof cover every month.

## Please Note:



**Please use the tape wrapped around the gap between the steel skeleton after installing.**