MODEL:3080515

W9.15xL26Xh4.5M

ASSEMBLEMANUAL

Congratulations on your purchase of our instant shelter. This unit is a combination of excellent manufacturing and design. It is comprised of a rigid frame and a durable cover. For easy assembly, we have marked all the parts with codes, with proper installation, use and maintenance, your unit will provide many years of good and suitable service.

Tools required

The following hand tool will be needed for proper Installation of your new building:
12mm,14mm，and 17mm Open End Wrenches,
12mm, 14mm, 17mm Sockets or Box Wrench,
Large Flat Head Screwdriver,
2lb maul or Sledgehammer
4 Foot Level 14' Step Ladder
Stake &String for aligning Base Plates &Frame

Assembly procedure

1. Prepare location and place all unit boxes near location sight. Perform an inventory check before beginning, to be certain all components are available for installation.
2. Secure base plate flanges to base surface.
3. Assemble every group of arch.
4. Begin frame assembly with front end arch, first interior arch, purlins, etc.
5. Add to assemble other groups of arches.
6. Install main cover over frame.
7. Install end cover over end panels.

Read all the detailed instructions and notices in the following assembly instructions!

Maintenance and care

Annually or more often, the unit should be completely inspected internally and externally to make certain the unit remains properly installed and secured .Particular attention should be paid to:
Hardware-check all carriage bolts and hardware connectors to be certain they are in place and tightened.
Weather trends, the unit will strain against the base plate flange under windy conditions, pegs hardware, connection to frame members should be maintained tight and depth of pegs should be checked to be certain they remain deeply and firmly set.
Snow Accumulation -All snow accumulation on the main cover should be removed as soon as possible. Tap the main cover from the inside with a broom or soft brush to clear cover.
Main Cover Lacing-the poly rope that secures the main cover to the bottom rail of the frame assembly should be checked, and adjusted as needed. The tension on the main cover should be uniform from end and side to side. Rope ends must be tied off onto the frame members at the ends on each side.
Cleaning -cover and doors can be cleaned with a mixture of light detergent and water. A soft bristle brush with the mixture can be used to loosen any hard dirt, mold, or buildup on the cover. After cleansing, the cover should be rinsed thoroughly to avoid any chemical reaction from residual detergent. Allowing dirt and debris to sit on cover over an extended time will damage cover irreparably.
Severe Weather-in preparation for inclement weather, completely secure the door of your buildings portable building. Allowing wind to enter end lifts the

Thanks again for choosing this quality product. The following is the detailed assembly instructions for you starting the assembly.

Code	PARTLIST	Quantity
1	Top roof tube	14
2	shoulder curving tube	24
2A	shoulder curving tube for panels	4
3	side wall tube	24
3A	side wall tube for panels	4
4	Horizontal tube	65
5L	Base flange in left corner	2
5R	Base flange in right corner	2
6	Base flange for door	4
7	Base flange for side wall	24
7A	Tie down ratchet	28
8	Lower vertical tube for door	4
9	Upper vertical tube for door	4
10	Beam for the side door	4
12	Bottom tensioning tube	4
13	Angle Supporting tube	4
13A	Angle Supporting tube clip	8
14	Tensioning tube	18+2
15	Dropping tube for the door	2+2
16	steel peg	92
17	Carriage boltM10×100	76
18	Carriage boltM10×55	176
18A	Carriage boltM10×65	20
19	Hexagon bolt M10×30	46
19A	Hexagon bolt M10×75	10
20	Rope for door	4
21	plastic cap	4+13
22	Roof cover	1
23	Front and back cover	2
24	rope for tensioning roof cover	13
25	band for tie down ratchet	14
26	Bungee ball	4
A1	Handle for leads	2
		2
		2

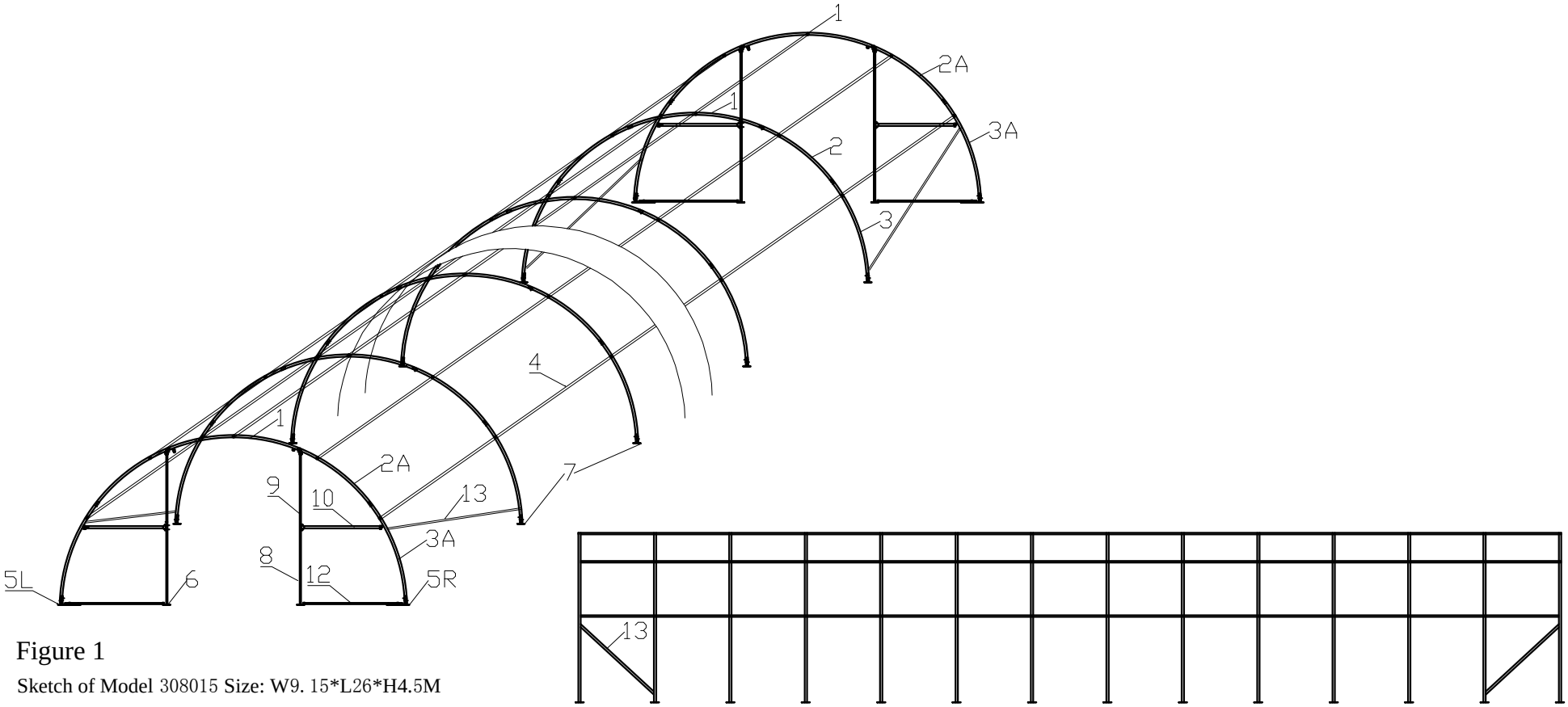

Figure 1

Sketch of Model 308015 Size: W9. 15*L26*H4.5M

Step #1 --SECURING BASE FLANGES

Sit the building boxes in the chosen location. Remove all the components from packaging to ensure all components are present by checking with the Part List.

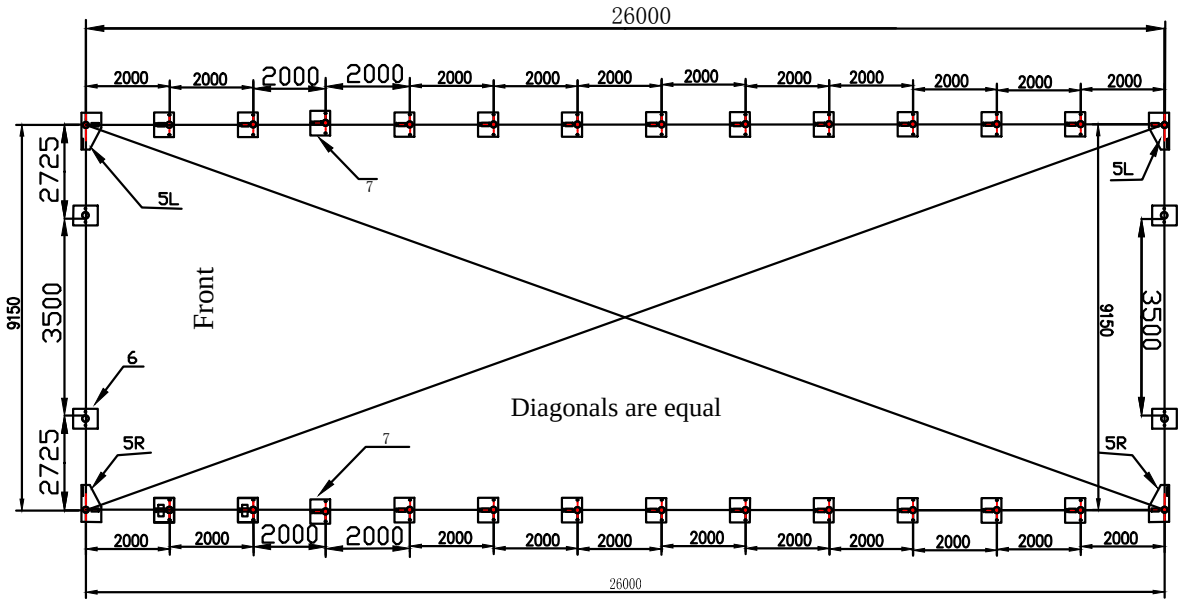

Figure 2 Position of Base Flanges

Begin by determining exact location of the four (4) corners of the building. Mark front edge and side-to-side width of assembly on ground. Drive alignment stakes into the ground outside of the markings, and draw alignment strings along both ends and sides of the building to the dimensions shown in Figure 3. The outline of the strings will represent the final location of the base flanges. The initial location of each Corner Base Flanges (5R & 5L) is critical to the alignment and fit of the frame components and cover.

Locate the Left Corner Base Flange and Right Corner Base Flange(5R&5L). Secure the base flanges with Stake Pegs (Part #16). Measurements shown in Figure 2 are to the center of the upright sockets on each Base Flange.

The Shelter must be secured to a firm surface that can receive and retain augers and pegs firmly in position. The shelter should be installed on FIRM GROUND, not on SWAMP, SOFT/WET GROUND. The Base Flanges must be secured so they cannot be moved. Arches are tensioned at their base as they insert into the Base Plate sockets.

Step #2 --ARCH ASSEMBLY

Assemble each arch on ground. Each arches consist of:
One curving roof tube (Part #1)
Two roof curving tube (Part #2/2A)
Two curving sidewall tube (Part # 3/3A)

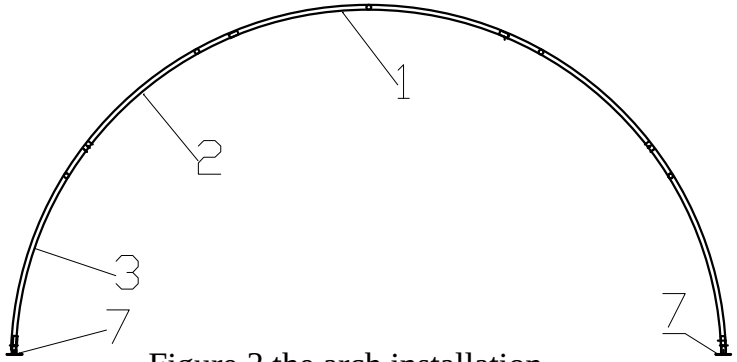

Figure 3 the arch installation

Connect the arches by Using the hexagon bolts with washers and nuts through predrilled holes in frame members. Do not tighten down the nuts completely until frame is fully assembled and set in place.

THE FRONT PANEL FRAME ASSEMBLY

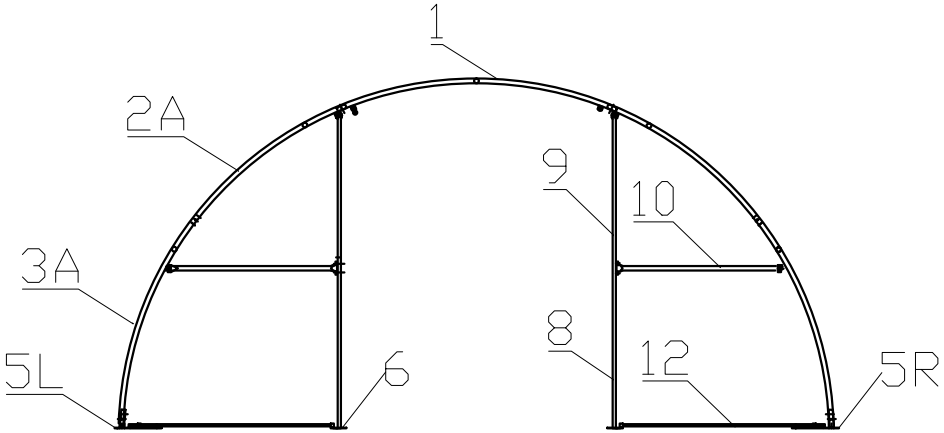

Figure 4 Frame Installation for Front Panel

Assemble the front panel frame. According to Figure 4, connect the end wall frame by Using the bolts with washers and nuts through predrilled holes in frame members. Do not tighten down the nuts completely until frame is fully assembled and set in place.

NOTE: Please notice that the part code of the arch sections. The sections of different arches are not the same. Check with the Part List and the Sketch Figure #1.

Step #3 --ERECTING ARCHES

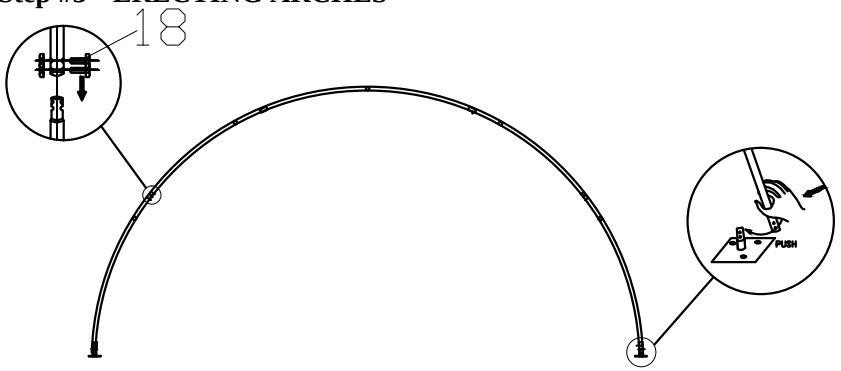

Figure 5 Erecting the Arch

As figure 5 shows, erecting the front arch by using ropes, tie and secure the rope on some heavy object to secure the arch standing temporarily. Then secure the base plates to the ground by using stake pegs(part #16).

Step #4 --Assembling Roof Purlins

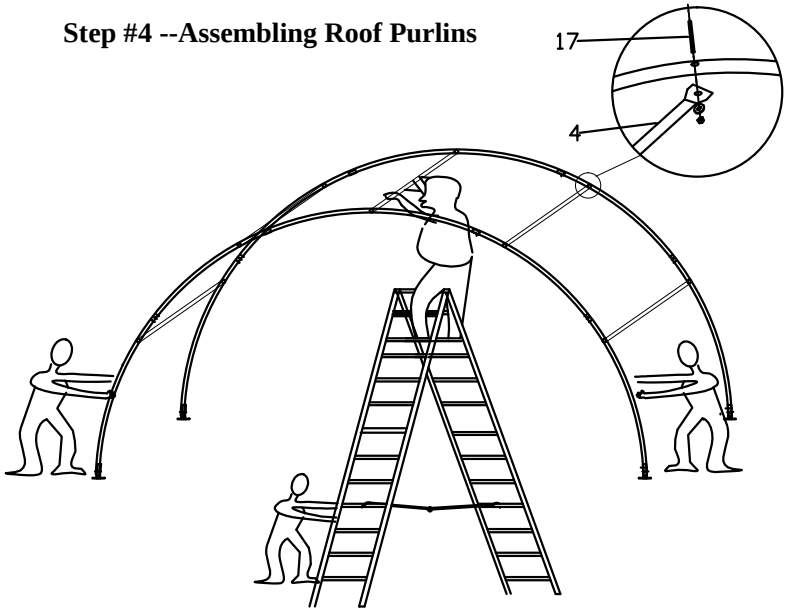

Figure 6

Immediately after erecting the front arch, erect the 2nd arch in the same way. Then connect the two erected arches using Roof Purlin Tubes as figure 6 shows. Secure the Roof Purlin tubes into place using carriage bolts and nuts (part #17).

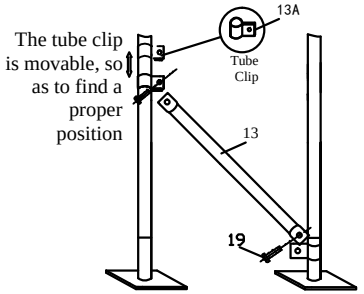

Figure 7: Wind Brace Supports(part 13)

Next install the Wind Brace supports that connect the Front Arch to the first Interior Arch. The Wind Braces give the arch assemblies strength as a unit.Use Bolt M10X30 (Part #19) at the end of each Wind Brace Support to secure.

Continue to install other Arches Assemblies in the same manner. Overlap pinched ends of Roof Purlin onto same carriage bolts inside frame assembly.

Next check entire frame assembly for square and plumb. Adjust Wind Braces and Roof Purlin as necessary to being frame into plumb. Next tighten frame bolts adequately.

Step #4 **--POSITION ROOF COVER**

As figure 8 shows, when ready to install Roof Cover, unpack cover and lay parallel to building frame on one side. Cover must be pulled over top of frame assembly without being snagged or stressed on any frame members. Use multiple ropes over top of frame as shown in picture below. Having another person inside frame on a ladder to assist in getting Roof Cover over frame will insure the cover will go on without any damage.

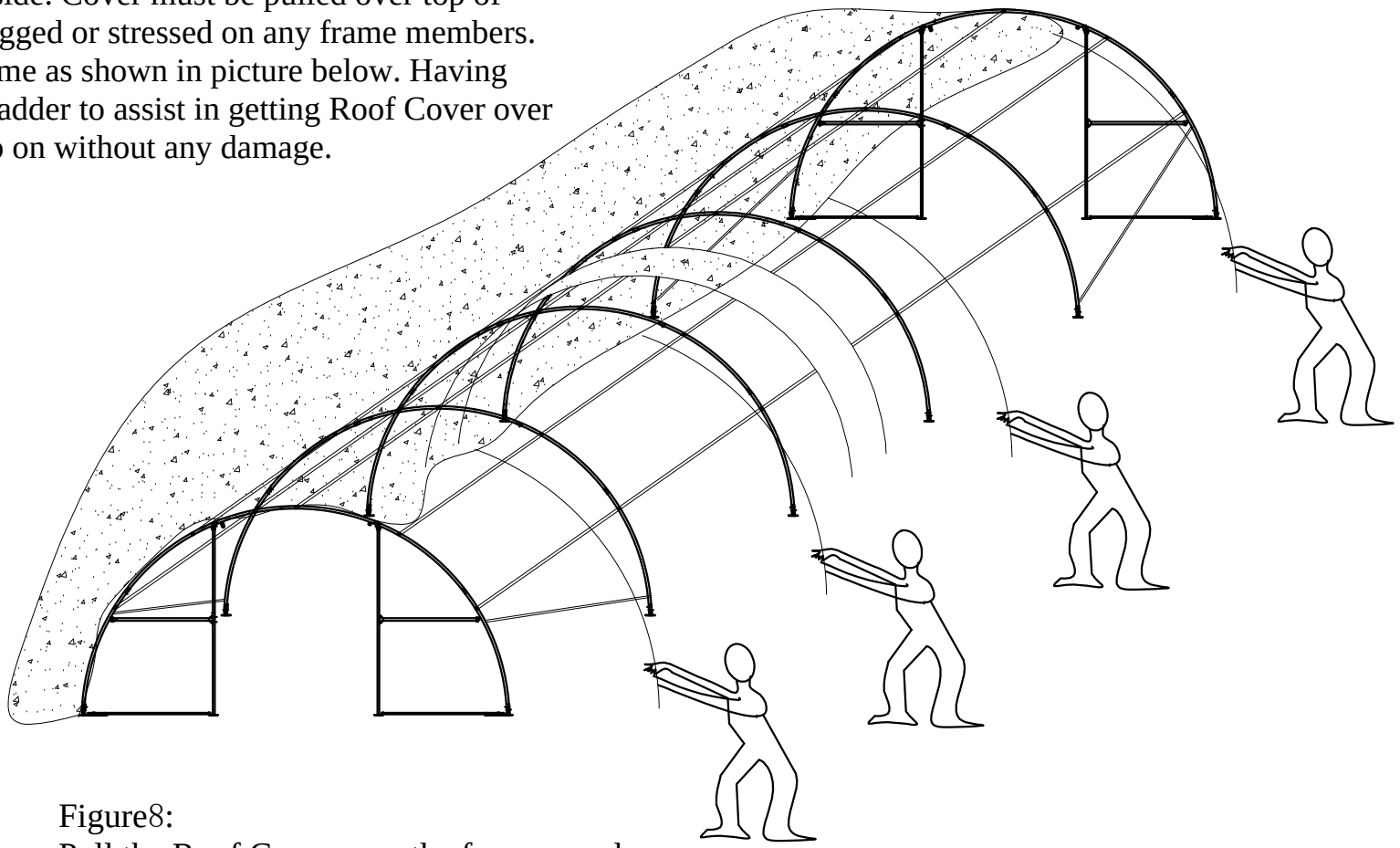

Figure8:
Pull the Roof Cover over the frame evenly

First circle the band for tie down ratchet(part#7A) around the tensioning tube through the cuts on the pocket of the roof cover.

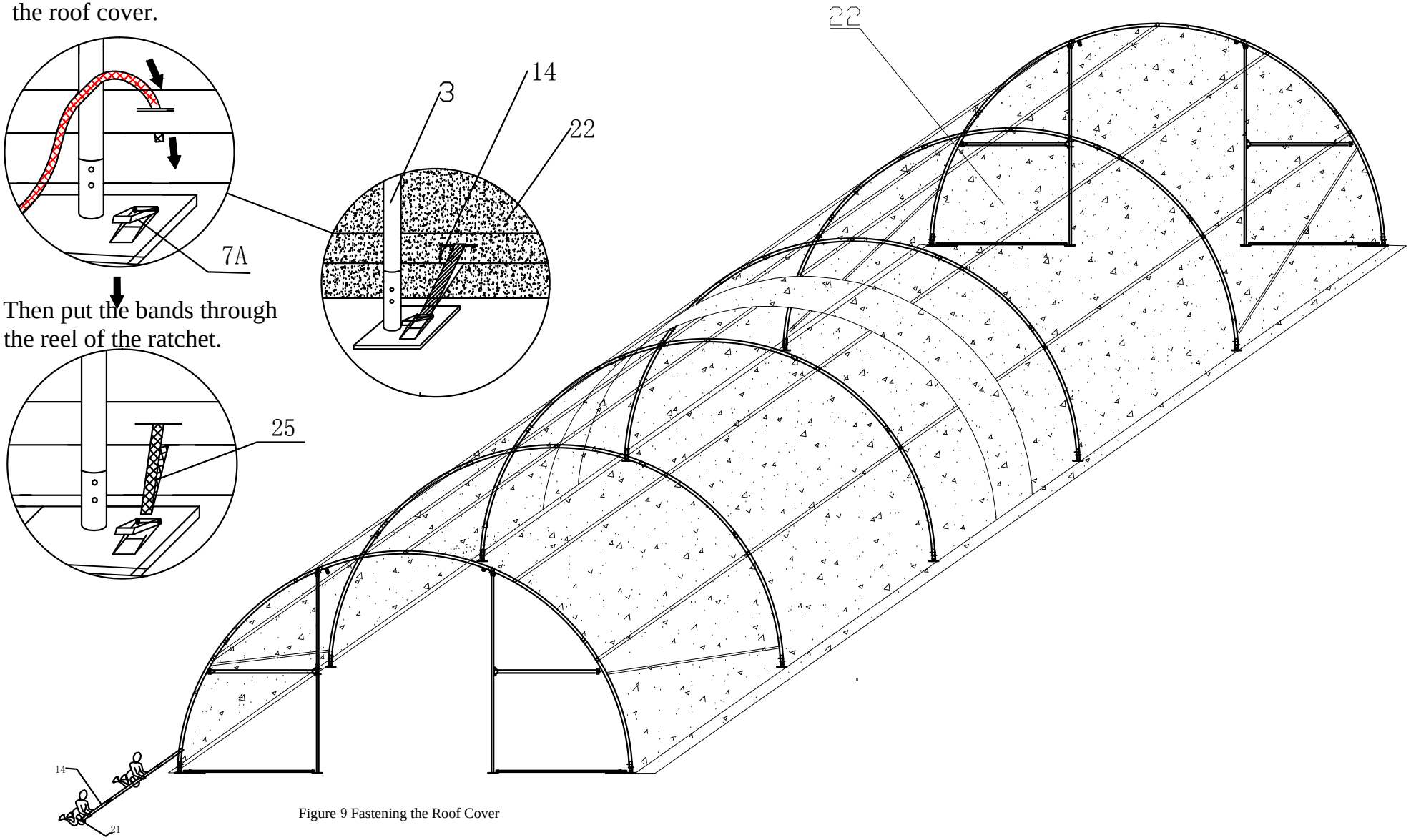

Figure 9 Fastening the Roof Cover

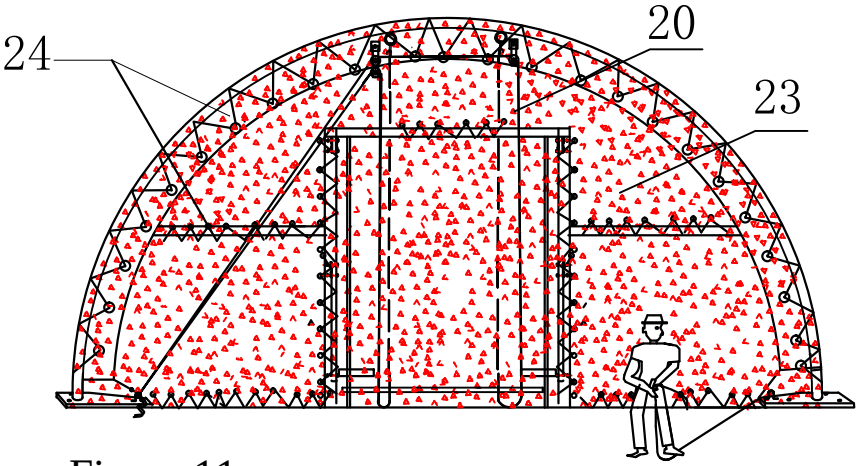

Figure 11
Fastening the two ends of the Roof Cover

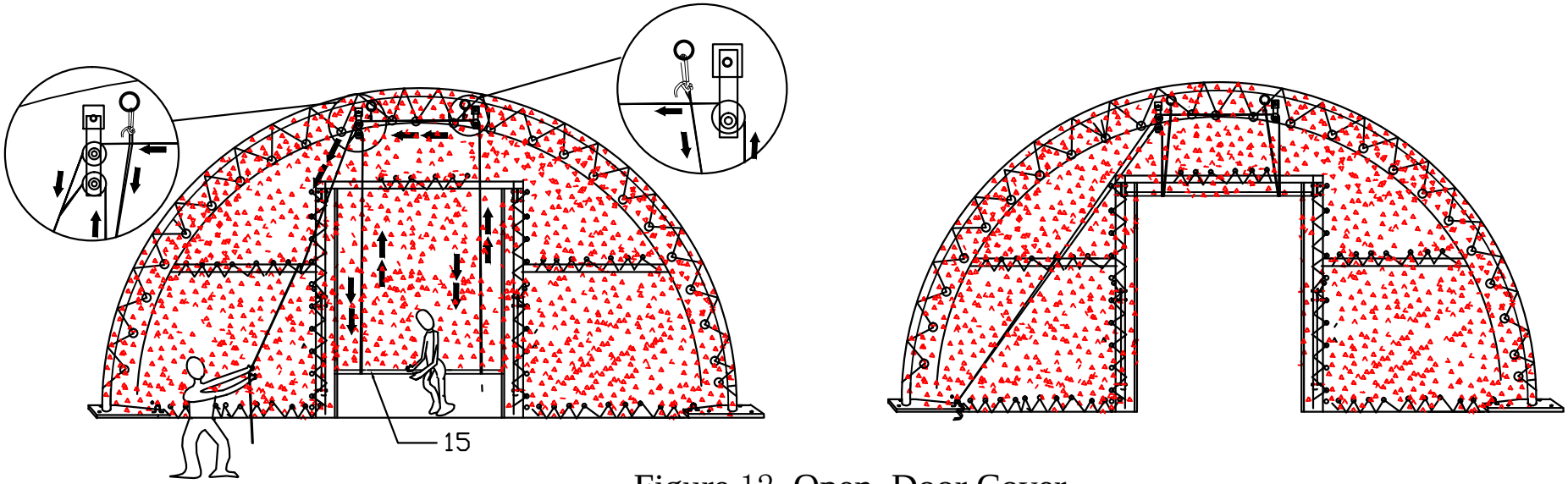

Figure 12 Open Door Cover