MODEL:306022T

W9.15xL18.3xH6.7M

ASSEMBLE MANUAL

Congratulations on your purchase of our instant shelter. This unit is a combination of excellent manufacturing and design. It is comprised of a rigid frame and a durable cover. For easy assembly, we have marked all the parts with codes. With proper installation, use and maintenance, your unit will provide many years of good and suitable service.

READ ALL THE INSTRUCTIONS BEFORE ASSEMBLY !

1. The proper erection and installation of this building requires a high level of care and safety. We recommend the safety regulations be complied with during the installation. It includes but is not limited to:
   - Safety hats, protective eyewear and protective clothing
   - Safety harnesses for all elevated workers
   - Proper ladder, cage, and safety operation
2. Site selection: Choose a solid level location for your building. Do not install the building where the ground could not keep the building steady. Do not install the building where the ground could not bear the weight of the building. Do not install the building in soft grass ground or wetland.
3. Be cautious with the surroundings. Keep work area clean. Do not set up it near snow drifts, in slippery places, or in wet location. The cover of the building will protect against normal falling leaves and light debris, however, large, fast or sharp falling items etc. may cause a puncture or tear in the cover material. So, keep the building away from such harmful things. Be careful with power and heat sources. Don't keep heat sources near the tarpaulin. Don't expose to open flame.
4. Chose a windless day to install the building. It is very difficult to attach the cover in heavy wind.
5. All snow accumulation on the main cover should be removed as soon as possible. Otherwise, when old snow on the roof becomes hard with new snow falling in, it will increase the burden of the roof badly and will damage the roof.
6. Try to keep the building, especially its base, in a dry condition. This will help the building to have a longer life than keeping it in a wet conditions.
7. The user should be responsible for the parts missing or damage occurred during the installation.
8. Don't make alteration of the frame. Don't hang anything besides included parts to the frame. Damages, consequential damages, or injuries caused by improper installation, alteration, improper use, or damages caused by snow, wind, or any acts of nature are owing to the user. The building is not intended for occupancy for any length of time.

ASSEMBLY PROCEDURE

1. Prepare location and place all unit boxes near location sight. Perform an inventory check before beginning, to be certain all components are available for installation.
2. Secure base plates flanges to base surface.
3. Assemble every group of arch.
4. Begin frame assembly with front end arch, first interior arch, purlins, etc.
5. Add to assemble other groups of arches.
6. Install main cover over frame.
7. Install end covers over end panels.

Read all the detailed instructions and notices in the following assembly instructions!

MAINTENANCE AND CARE

1. If some parts or the cover were accidently damaged during the use, contact the local supplier for advises on the repairing method or replacements, so that to prevent from further damage and keep the building in a good condition.
2. When replacing the parts, make certain the whole frame and the parts connected to the replaced parts be well fixed or supported.
3. Same with when attaching the cover, choose a windless day to replace the cover. Begin with making certain all the bolts of the frame and the tensioning equipments be well fixed. When taking off the cover, make sure the related ropes, etc. be taken off, and the cover will not be blocked during the way. Avoid taking off the cover with heavy big power equipments.
4. For the building with mechanical door. Keep the door closed if it is not used for long time. This helps the mechanical door to have a longer life.
5. To enlongate the life of the cover, put small duct tape or foam rubber (provide it by yourself) on the frame that comes to in contact with cover. The tape and foam rubber acts as a cushion to avoid rubbing damage to the cover over years.
6. Periodically(once in half a year or more often), the building should be completely inspected and maintained internally and externally to make certain the building remains properly installed and secured. Including: check all bolts and hardware connectors to be certain they are in place and tightened, the base plates are still fixed firmly, check and adjust the ropes if in need, clean the cover with suitable washing. Allowing dirt and debris to sit on cover over an extended time will damage cover irreparably.

Thanks again for choosing this quality product. The following is the detailed assembly instructions for you starting the assembly.

Part Code	Description	Quantiy
1	Top roof tube	3
1A	Top roof tube at front and back panel	2
1B	Top roof tube for steel wire	2
2	Roof curving tube	6
2A	Roof curving tube at front and back panel	4
2B	Middle of roof curving tube for steel wire	4
3	Roof curving tube at shoulder hight	6
3A	Roof curving tube at shoulder hight for steel wire	8
4	Sidewall tube	6
4A	Sidewall tube for front and back panel	2
4B	Middle sidewall tube for steel wire	4
4C	Sidewall tube for hand winch rail at front and back panel	2
5	Horizontal tube	42
6L	Base flange -Left corner	2
6R	Base flange -Right corner	2
7	Base flange for sidewall	10
8	Base plate for front panel	4
9	Upper door beam for door	4
9A	Lower door beam for door	4
		4sets
10	Door beam	2+2
10A	Verticaltube for door beam	2
11	Door track for two ends of the door	4
12	Bottom rail for winch of mechanical door(beside the door)	2
13	Tensioning tube for roof cover	12+2
14	Tensioning tube for front panel	4
15	Door dropping tube	12+12
16	Door dropping tube at the bottom	2+2
17	expansion anchor bolt	64
18	Hexagon bolt M8x55	238
18A	Hexagon bolt M12x30	60
19	Carriage bolt M8x65	52
20	Hexagon bolt M10x30	18
21	Hexagon bolt M10x90	14
21A	Carriage bolt M10x85	6
22	Plastic cap	13+4
23	Steel wire for roof	24
24	Steel wire for sidewall	8

		32+64
25	Door track for two ends of the door	2sets
26	Roof cover	1
27	Front cover	2
28	Door cover	2
29	Rope for fastening the roof cover, the door cover and the front&back cover	16
30	Band for tie down ratchet	14
31	Anti wear pad	42

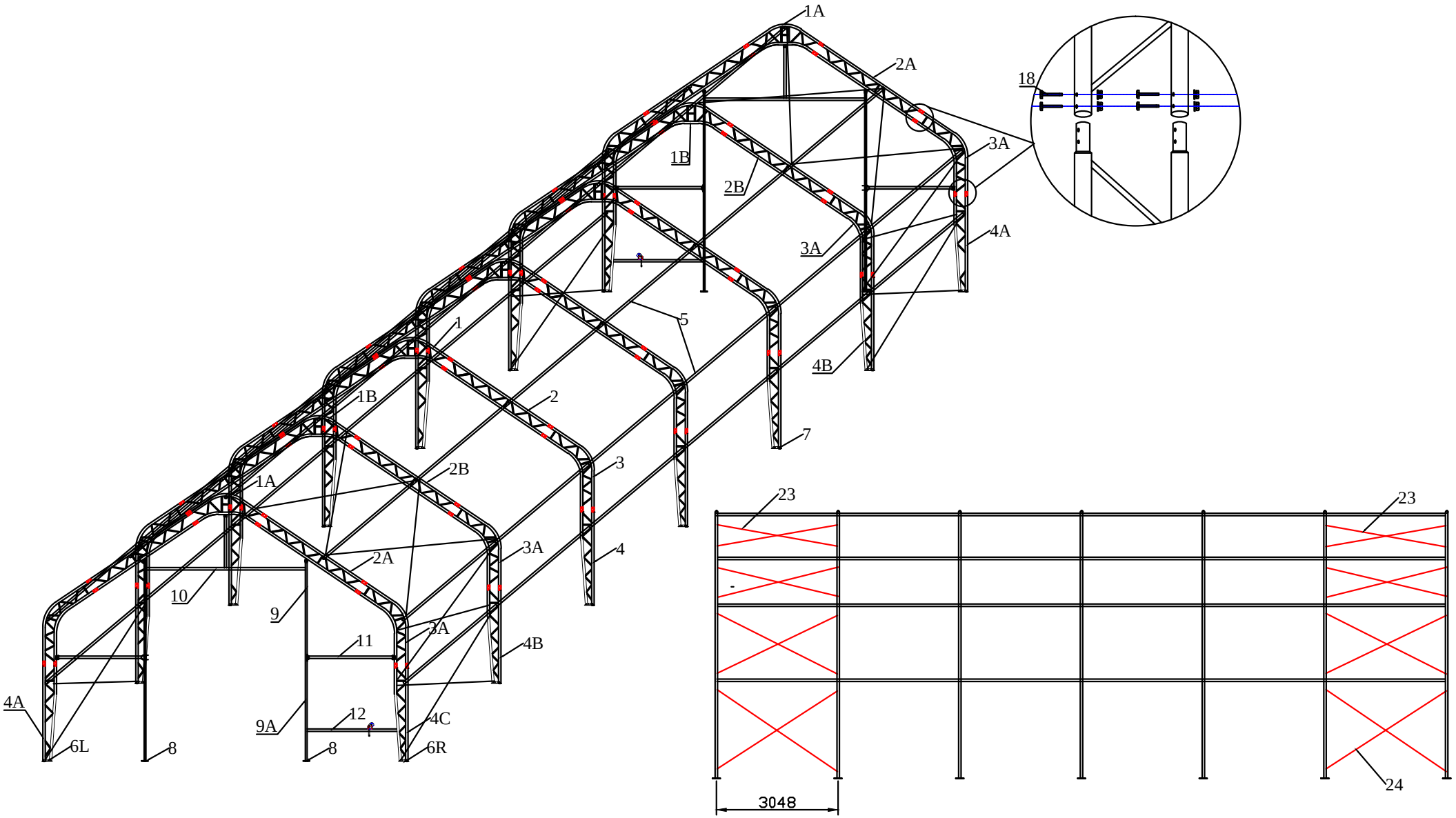

Figure 1
Sketch of Model 306022T Size: W9. 15*L18. 3*H6.7M

Step #1 --ARCH ASSEMBLY

Assemble ALL the arches including the base plates, and LAY them **on the ground** first. DO NOT erect them until you finish all the arches assembly.

Each arches consist of:

One Top roof tube (Part # 1/1A/1B), Two Roof curving tube (Part # 2/2A/2B), Two Roof curving tube at shoulder height (Part # 3/3A), Two Sidewall tube (Part # 4/4A/4B/4C), Two Base plates (Part #6L/6R/7).

Connect the arches by Using the hexagon bolts with washers and nuts(part #18) through predrilled holes in frame members.

NOTE: Please notice that the part code of the arch sections. The sections of middle,front and back arches are not the same. Check with the Part List and the Sketch Figure.

NOTE: Please use the blanket(part #17) at each joint of connection of arches(except the two joints at bottom).

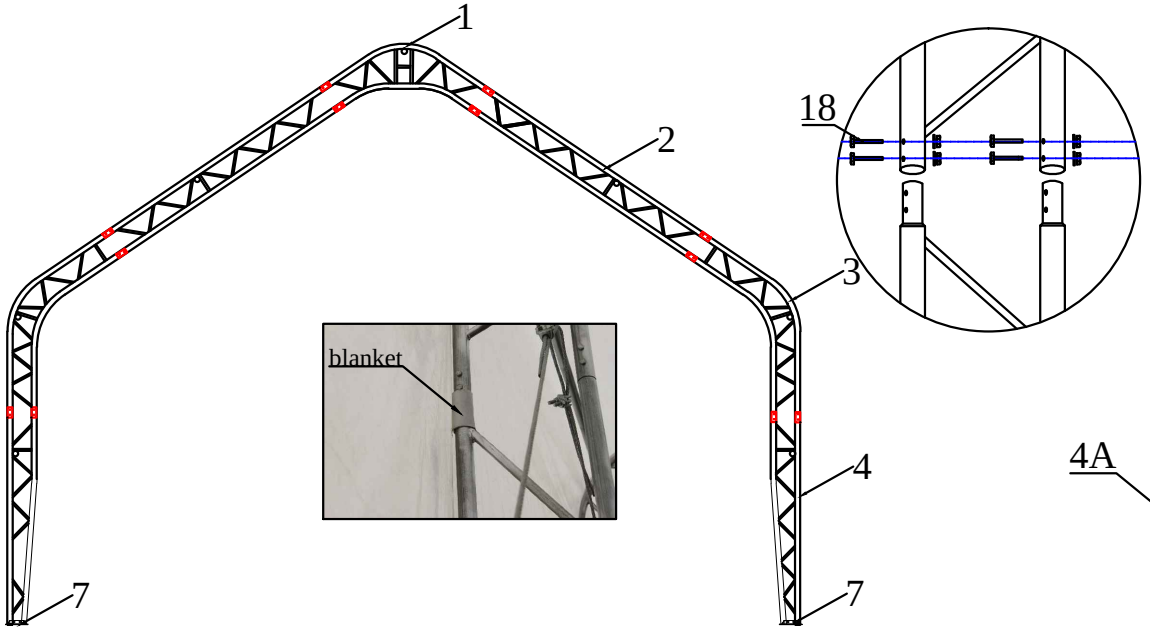

Figure 2 The middle arch

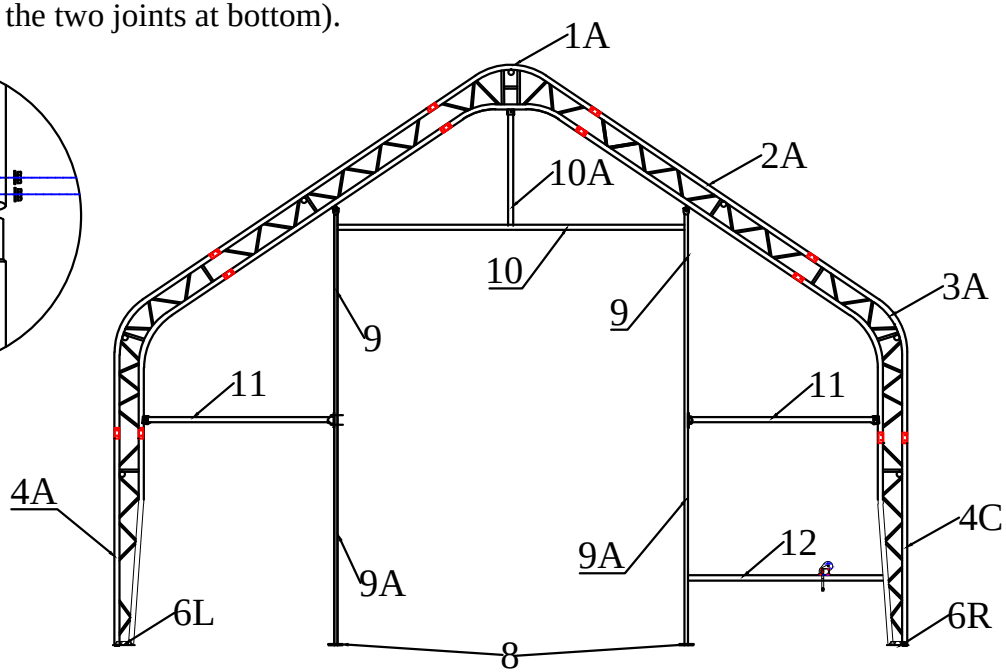

Figure 3 Front and Back Panel Arch

Step #2 --ERECTING ARCHES

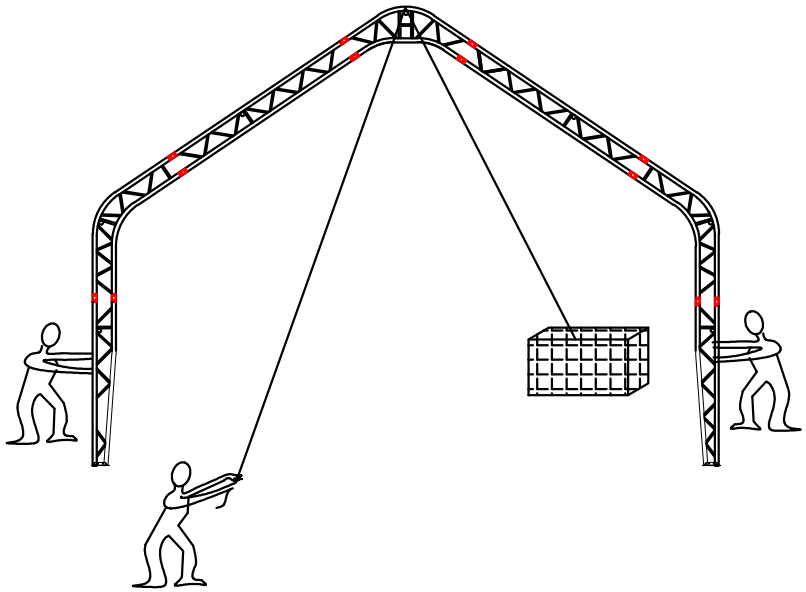

Figure 4 Erecting the Arch

As figure 4 shows, erecting the front arch by using ropes, tie and secure the rope on some heavy object to secure the arch standing temporarily. Then secure the base plates to the ground by using stake pegs(part #17).

Step #3 --Assembling Roof Purlins

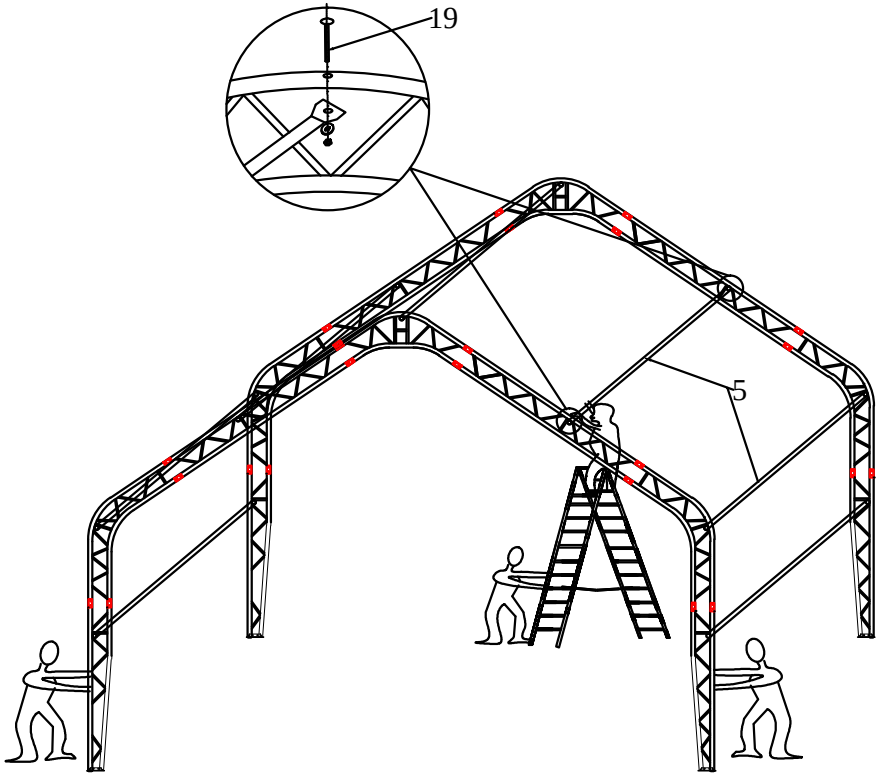

Figure 5

Immediately after erecting the front arch, erect the 2nd arch in the same way. Then connect the two erected arches using Roof Purlin Tubes as figure 5 shows. Secure the Roof Purlin tubes into place using carriage bolts and nuts (part #19).

Figure 4 Position of Base Flanges

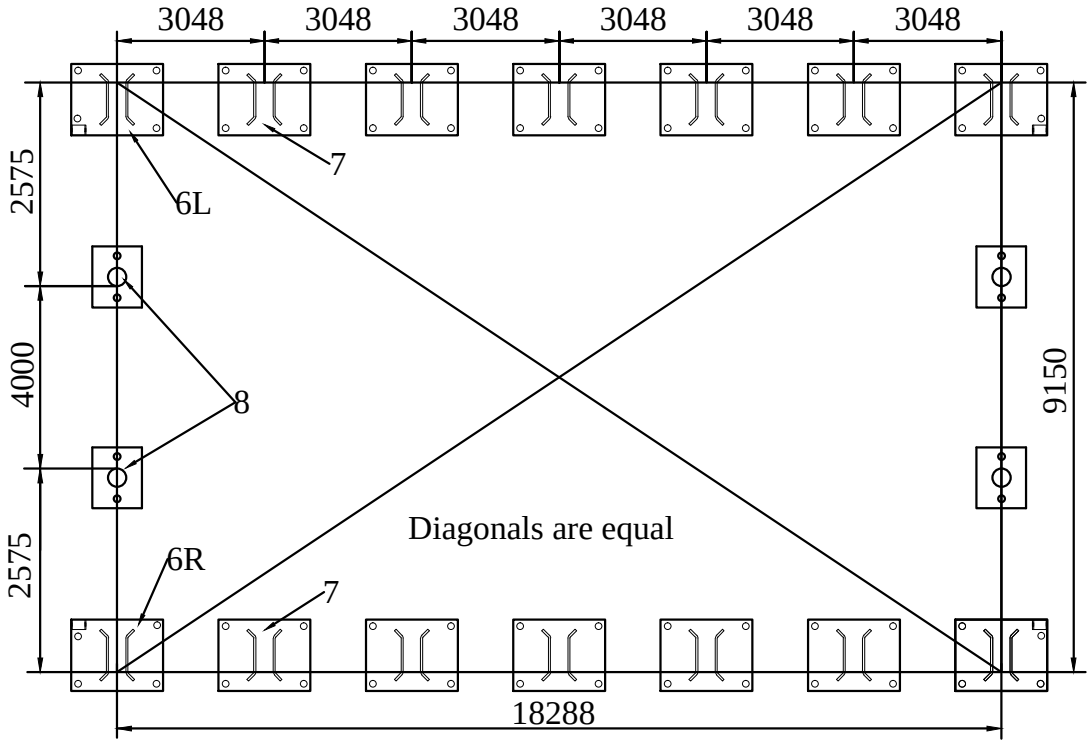



The Shelter must be secured to a firm surface that can receive and retain pegs firmly in position. The shelter should be installed on FIRM GROUND, not on SWAMP, SOFT/WET GROUND. The Base Flanges must be secured so they cannot be moved.

ROOF COVER INSTALLATION
Step #5 --POSITION ROOF COVER

As figure 8 shows, when ready to install Roof Cover, unpack cover and lay parallel to building frame on one side. Cover must be pulled over top of frame assembly without being snagged or stressed on any frame members. Use multiple ropes over top of frame as shown in picture below. Having another person inside frame on a ladder to assist in getting Roof Cover over frame will insure the cover will go on without any damage.



Figure 8 Pull the Roof Cover over the frame evenly

Step #6 --TENSION COVER ON FRAME FROM SIDE-TO-SIDE

As Figure 9 shows, when Roof Cover is over top of Frame Assembly, insert Cover Tensioning Tubes into pockets along both sides of Roof Cover. Center Roof Cover over Frame assembly both side to side and front to back. Align one side of Roof Cover evenly front to back. Add Band for Tie Down Ratchet at each point along the cover opening, as shown. Put Band for Tie Down Ratchets over Cover Tensioning Tubes at each Base Plate along one side. Bands do not attach to Tensioning Tubes, but loop around and secure at both ends on ratchet.
Next take up slack in tie bands by ratcheting the mechanisms, tightening cover. Evenly adjust ratchets on both sides of roof cover to take wrinkles out of roof cover. **DO NOT** fully tighten cover yet. Leave adequate slack so that cover can also be adjusted front to back in next step.

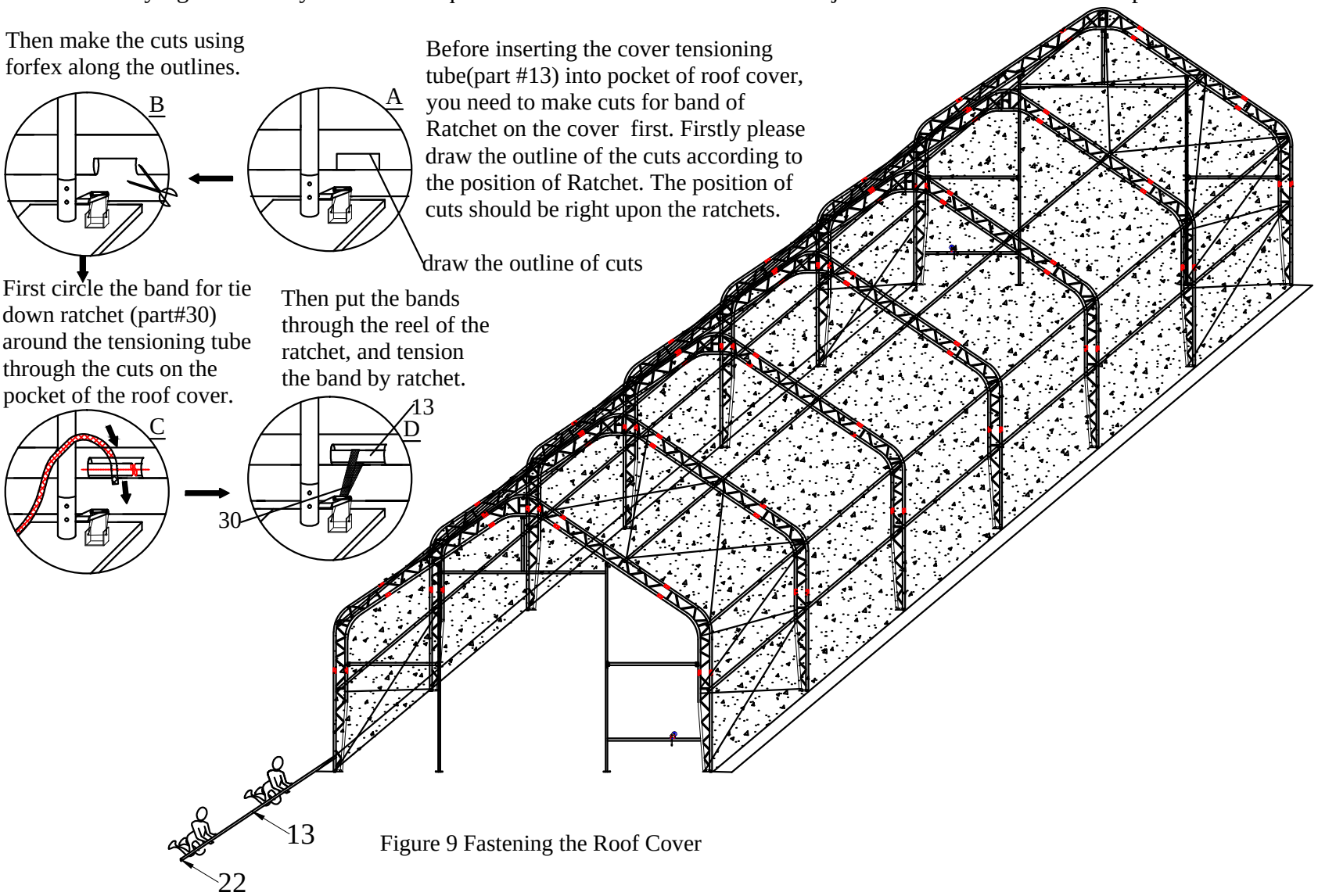

Figure 9 Fastening the Roof Cover

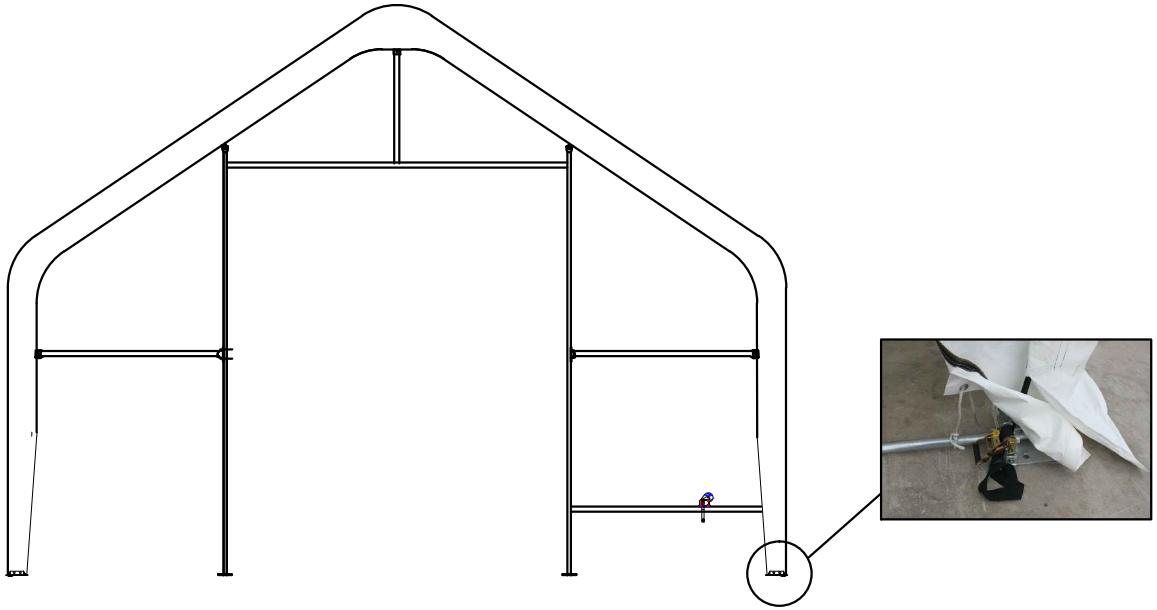

Figure 10 Installation of Front Panel Cover

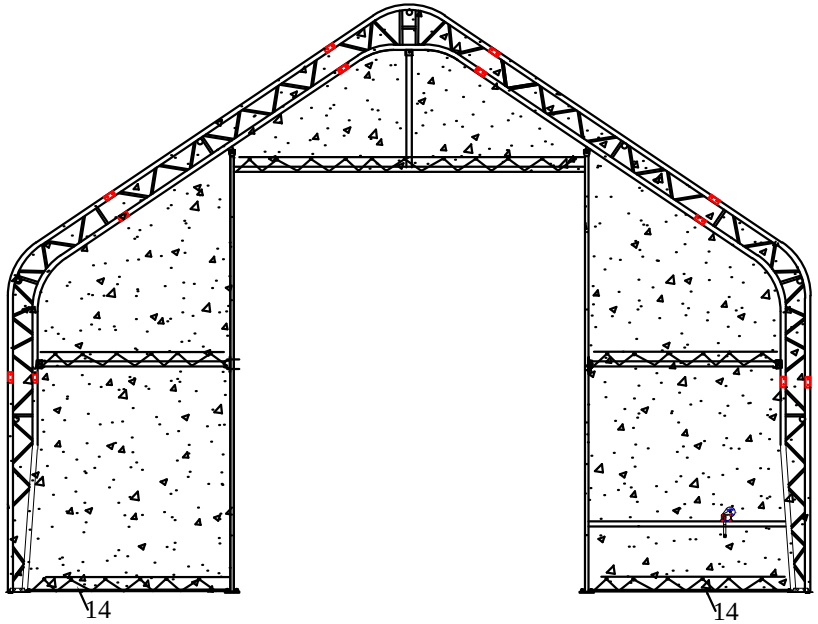

Figure 11 Fastening the two ends of the Roof Cover

Step #7 --TIGHTEN ROOF COVER ON FRAME FRONT TO BACK

The roof cover is tensioned from front to back by the rope lacing to grommet flaps inside the main cover, inside the unit at both front and rear arches. Using the rope provided, lace the main cover grommet flap around the main frame front and rear arch pieces. Start in the top middle of each arch, and lace to each side. Add rope length by tying pieces together or cutting as necessary.

Lace all grommets on cover inside flap with rope. Starting at the middle top point over the door, tighten lacing only enough to take wrinkles out of the cover. Repeat for the Rear Arch. **DO NOT** over tighten lacing to pull out the grommets.

After the roof cover lacing is adjusted evenly across the grommet flap, go back and re-adjust the Tensioning Ratchets along the side edges of the Roof Cover. At this point, the main cover can be pulled taut enough to take all excess material and wrinkles out of cover. It will be necessary to repeat this step 2-3 weeks after unit assembly is complete and roof cover has a chance to stretch out over the frame completely.

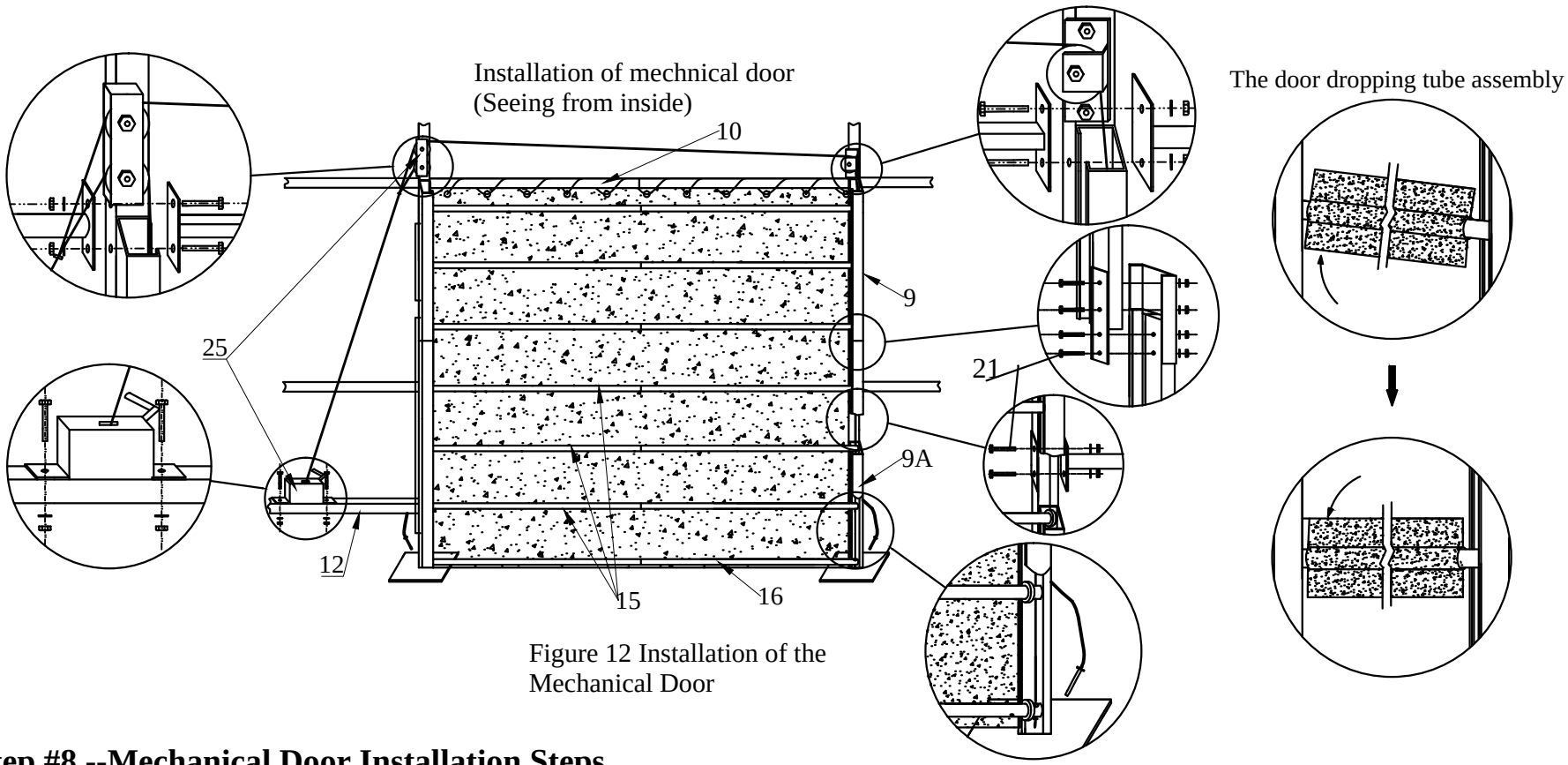

Figure 12 Installation of the Mechanical Door

Step #8 --Mechanical Door Installation Steps

1. Install Main Door Pulleys (left and right) over the Top of the Door on each side of the Door Beam (Part #10).
2. Next mount the Winch Mechanism to the Front Panel Lower Beam (Part #12).
3. Slide Bottom Door Dropping Tube (Part #16) into the bottom horizontal fabric pocket on the Door Cover(Part #28). Then slide the six remaining Door Dropping Tubes (Part #15) into the remaining horizontal fabric pockets in the Door Cover.
4. From the bottom of the door tracks(9,9A), gently raise and slide one door dropping tube(15) into the tracks. And then feed the other remaining door dropping tubes(15,16) into the door tracks.
5. Next install the steel wire that leads from the door winching assembly to the bottom of the door dropping tubes. The Winch Assembly has a long and a short steel cable secured to it. Feed the end of the shorter of the two cables through the lower roller of the double pulley at the top of the door assembly track closest to the Winch Assembly, and then down through the holes in the Bottom Door Dropping Tube (16) on the left hand side of the door (facing from the inside). When the steel cable goes down though the hole in the Bottom Dropping Tube (16), tie a knot in the steel wire so that it cannot pass back up through the hole.
6. From the Winch Assembly route leading end of the Longer Steel Cable through the Upper Roller of the double pulley on near door track and then through the Single Roller on the door track farthest from the Winch Assembly. Then down through the Bottom Door Dropping Tube (16). When the steel cable goes down though the hole in the Bottom Door Dropping Tube (16), tie a knot in the steel cable. Door can now be opened or closed by operating the Winch Assembly. Raise and lower the door several times to be certain door tube ends are not binding on track. Lubricate if necessary.