SHELTER

MODEL: 304015

Installation manual

MODEL:L12 X W9.15 X H4.5M



Congratulations on your purchase of our instant shelter. This unit is a combination of excellent manufacturing and design. It is comprised of a rigid frame and a durable cover. For easy assembly, we have marked all the parts with codes. With proper installation, use and maintenance, your unit will provide many years of good and suitable service.

READ ALL THE INSTRUCTIONS BEFORE ASSEMBLY !

1. The proper erection and installation of this building requires a high level of care and safety. We recommend the safety regulations be complied with during the installation. It includes but is not limited to:
   - Safety hats, protective eyewear and protective clothing
   - Safety harnesses for all elevated workers
   - Proper ladder, cage, and safety operation
2. Site selection: Choose a solid level location for your building. Do not install the building where the ground could not keep the building steady. Do not install the building where the ground could not bear the weight of the building. Do not install the building in soft grass ground or wetland.
3. Be cautious with the surroundings. Keep work area clean. Do not set up it near snow drifts, in slippery places, or in wet location. The cover of the building will protect against normal falling leaves and light debris, however, large, fast or sharp falling items etc. may cause a puncture or tear in the cover material. So, keep the building away from such harmful things. Be careful with power and heat sources. Don't keep heat sources near the tarpaulin. Don't expose to open flame.
4. Chose a windless day to install the building. It is very difficult to attach the cover in heavy wind.
5. All snow accumulation on the main cover should be removed as soon as possible. Otherwise, when old snow on the roof becomes hard with new snow falling in, it will increase the burden of the roof badly and will damage the roof.
6. Try to keep the building, especially its base, in a dry condition. This will help the building to have a longer life than keeping it in a wet conditions.
7. The user should be responsible for the parts missing or damage occurred during the installation.
8. Don't make alteration of the frame. Don't hang anything besides included parts to the frame. Damages, consequential damages, or injuries caused by improper installation, alteration, improper use, or damages caused by snow, wind, or any acts of nature are owing to the user. The building is not intended for occupancy for any length of time.

ASSEMBLY PROCEDURE

1. Prepare location and place all unit boxes near location sight. Perform an inventory check before beginning, to be certain all components are available for installation.
2. Secure base plates flanges to base surface.
3. Assemble every group of arch.
4. Begin frame assembly with front end arch, first interior arch, purlins, etc.
5. Add to assemble other groups of arches.
6. Install main cover over frame.
7. Install end covers over end panels.

Read all the detailed instructions and notices in the following assembly instructions!

MAINTENANCE AND CARE

1. If some parts or the cover were accidently damaged during the use, contact the local supplier for advises on the repairing method or replacements, so that to prevent from further damage and keep the building in a good condition.
2. When replacing the parts, make certain the whole frame and the parts connected to the replaced parts be well fixed or supported.
3. Same with when attaching the cover, choose a windless day to replace the cover. Begin with making certain all the bolts of the frame and the tensioning equipments be well fixed. When taking off the cover, make sure the related ropes, etc. be taken off, and the cover will not be blocked during the way. Avoid taking off the cover with heavy big power equipments.
4. For the building with mechanical door. Keep the door closed if it is not used for long time. This helps the mechanical door to have a longer life.
5. To enlongate the life of the cover, put small duct tape or foam rubber (provide it by yourself) on the frame that comes to in contact with cover. The tape and foam rubber acts as a cushion to avoid rubbing damage to the cover over years.
6. Periodically(once in half a year or more often), the building should be completely inspected and maintained internally and externally to make certain the building remains properly installed and secured. Including: check all bolts and hardware connectors to be certain they are in place and tightened, the base plates are still fixed firmly, check and adjust the ropes if in need, clean the cover with suitable washing. Allowing dirt and debris to sit on cover over an extended time will damage cover irreparably.

Thanks again for choosing this quality product. The following is the detailed assembly instructions for you starting the assembly.

Part	Description	Quantity
1	Top roof tube	9
2	Roof curving tube at shoulder height	14
2A	Roof curving tube at shoulder height for front and back panel	4
3	Sidewall tube	14
3A	Sidewall tube for front and back panel	2
3B	Sidewall tube for hand winch rail	2
4	Horizontal tube	40
5L	Base flange in left corner	2
5R	Base flange in right corner	2
6	Base flange for door	4
7	Base flange for sidewall	14
7A	Tie down ratchet	18
8	Upper door beam for door	4
9	Lower door beam for door	4
	Door frame connector	4sets
10	Beam for the side door	4
11	Door beam	4
12	Bottom tensioning tube	4
12A	Rail for hand winch installation	2
13	Supporting tube	4
13A	Tube clip for slanting support tube	8
14	Tensioning tube	8+2
15	Door dropping tube	12+12
15A	Door dropping tube at the bottom	2+2
16	Steel peg	62
17	Carriage bolt10×100	76
18	Carriage bolt10×55	126
18A	Hexagon bolt 10×75	54
19	Hexagon bolt 10×30	20
19A	Hexagon bolt 10×90	4
21	Plastic Φ32	16
22	Roof cover	1
23	Panels cover	2
23A	Mechanical door cover	2
24	Rope for tensioning roof cover	15
25	Band for tie down ratchet	18
26	Bungee ball	4
	Tape	2

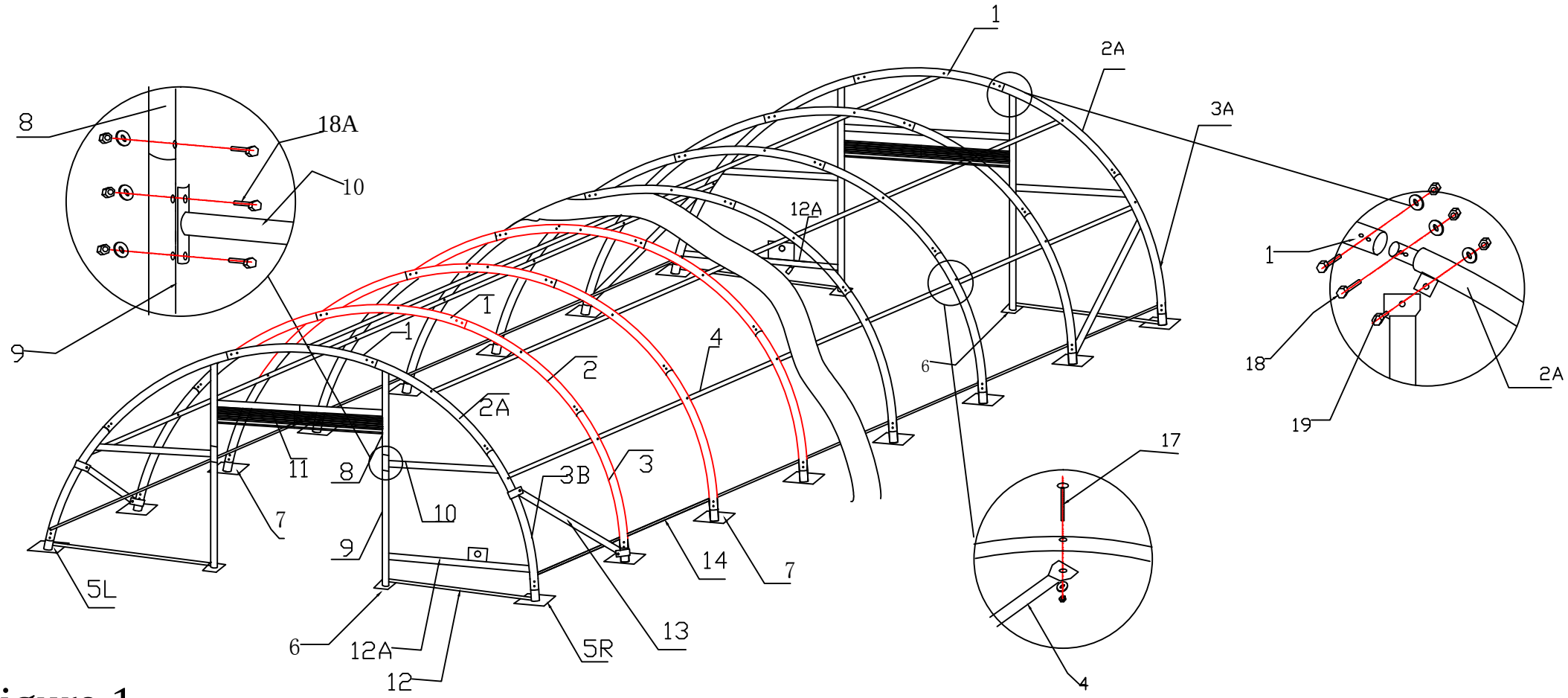

Figure 1

Sketch of Model 304015 Size:W9. 15* L12. 2*H4.5M

Step #1 --SECURING BASE FLANGES

Sit the building boxes in the chosen location. Remove all the components from packaging to ensure all components are present by checking with the Part List.

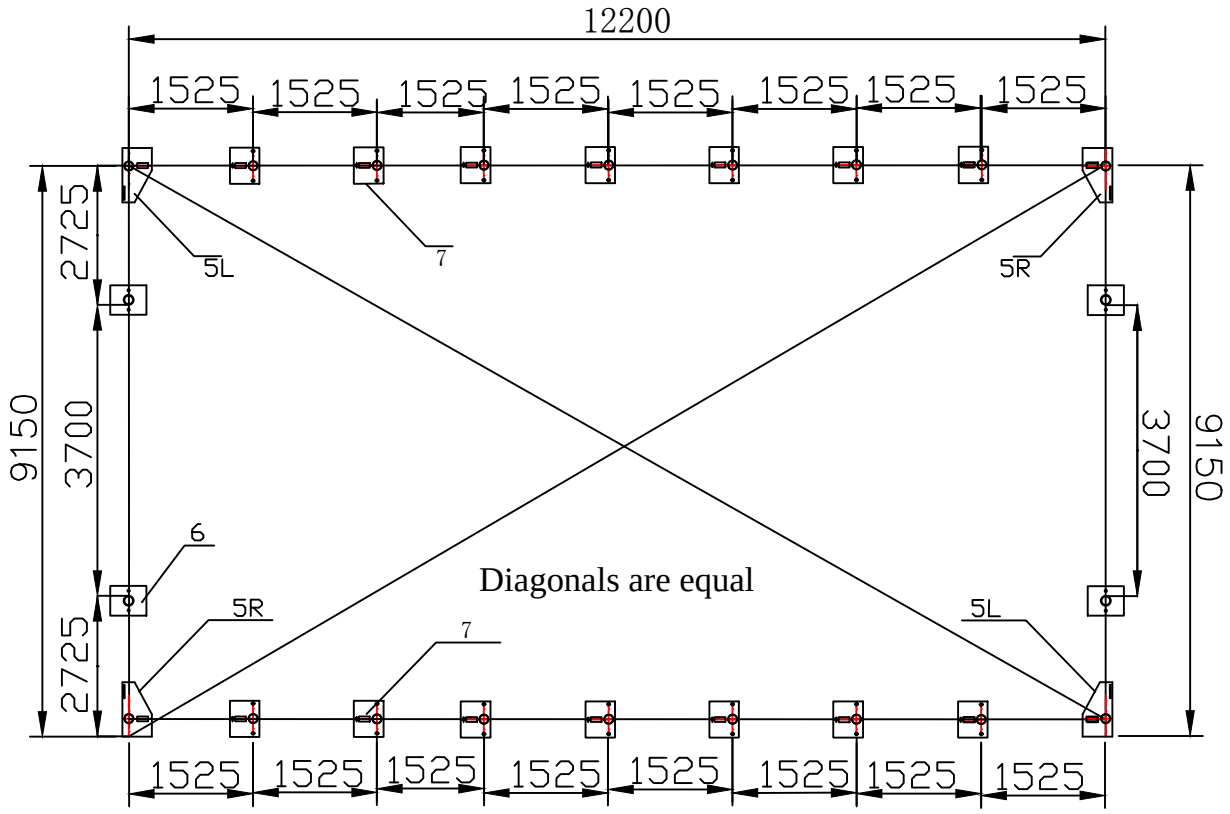

Figure 2 Position of Base Flanges

Begin by determining exact location of the four (4) corners of the building. Mark front edge and side-to-side width of assembly on ground. Drive alignment stakes into the ground outside of the markings, and draw alignment strings along both ends and sides of the building to the dimensions shown in Figure 3. The outline of the strings will represent the final location of the base flanges. The initial location of each Corner Base Flanges (5R & 5L) is critical to the alignment and fit of the frame components and cover.

Locate the Left Corner Base Flange and Right Corner Base Flange(5R&5L). Secure the base flanges with Stake Pegs (Part #16). Measurements shown in Figure 2 are to the center of the upright sockets on each Base Flange.

The Shelter must be secured to a firm surface that can receive and retain augers and pegs firmly in position. The shelter should be installed on FIRM GROUND, not on SWAMP, SOFT/WET GROUND. The Base Flanges must be secured so they cannot be moved. Arches are tensioned at their base as they insert into the Base Plate sockets.

Step #2 --ARCH ASSEMBLY

Assemble each arch on ground. Each arches consist of:
One curving roof tube (Part #1)
Two roof curving tube (Part #2/2A)
Two curving sidewall tube (Part # 3/3A/3B)

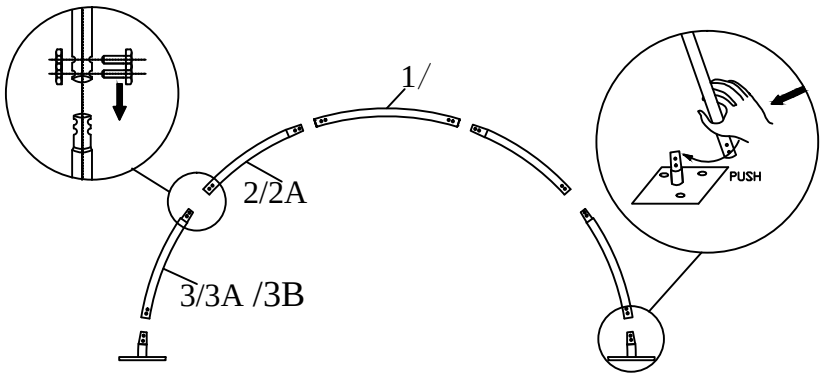

Figure 3 the arch installation

Connect the arches by Using the hexagon bolts with washers and nuts through predrilled holes in frame members. Do not tighten down the nuts completely until frame is fully assembled and set in place.

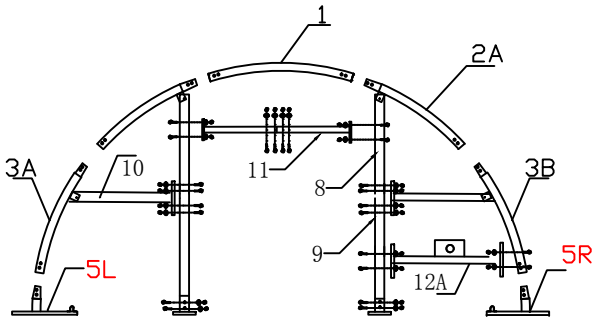

Figure4
Frame Installation for Back Panel

Assemble the front and back panel frame. According to Figure4&5, connect the end wall frame by Using the bolts with washers and nuts through predrilled holes in frame members. Do not tighten down the nuts completely until frame is fully assembled and set in place.

Step #3 --ERECTING ARCHES

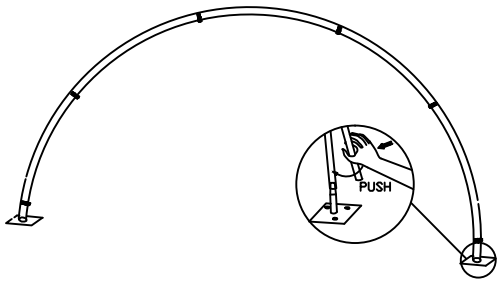

Figure 5
Attaching Arches to Base Flanges

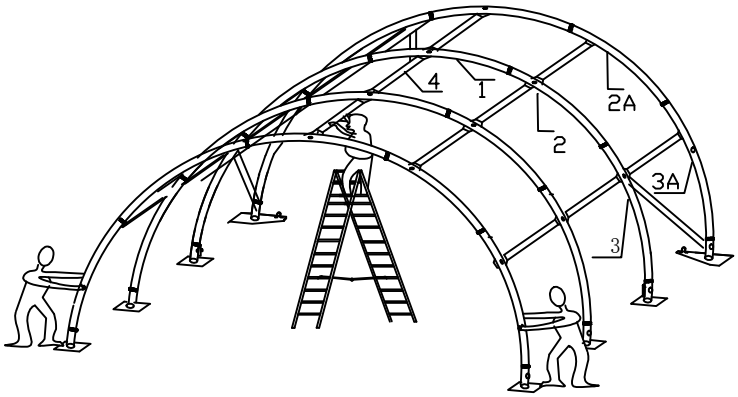

Figure 6

Begin frame assembly by erecting Front Arch into Front Corner Base Flanges. Place left frame sidewall tubing into the upright tube socket into the Left Base Flange. Place Hexagonal Bolt through base flange socket and arch sidewall tube hole.
In order to insert Right Sidewall Tube into Right Front Corner flange, it is necessary to support arch on left side to prevent movement. Position the Right Sidewall Tube over the Right Corner Base Flange.
Once the Right Sidewall Tube is placed into right corner base flange, insert a hexagonal bolt and nut to prevent it from popping out of the socket while
assembly continues.
Next stand first interior arch up to repeat insertion into Base flanges.

Immediately after putting first interior arch into place, connect Front Arch and Interior arch using Roof Purlin Tubes at top ridge and side shoulder cures of arches. Secure the Roof Purlin tubes into place using carriage bolts and nuts.
Nets install the Wind Brace supports(part#13) and Tube Clip(part#13A) that connect the Front Arch to the first Interior Arch. The Wind Braces give the arch assemblies strength as a unit. Use Bolt M10X30 at the end of each Wind Brace Support to secure.
Continue to install other Arches Assemblies in the same manner.
Overlap pinched ends of Roof Purlin onto same carriage bolts inside frame assembly.
Next check entire frame assembly for square and plumb. Next tighten frame bolts adequately. **DO NOT** over tighten bolts so as to oval or compress frame components.。

Step #4 --POSITION ROOF COVER

As figure 8 shows, when ready to install Roof Cover, unpack cover and lay parallel to building frame on one side. Cover must be pulled over top of frame assembly without being snagged or stressed on any frame members. Use multiple ropes over top of frame as shown in picture below. Having another person inside frame on a ladder to assist in getting Roof Cover over frame will insure the cover will go on without any damage.

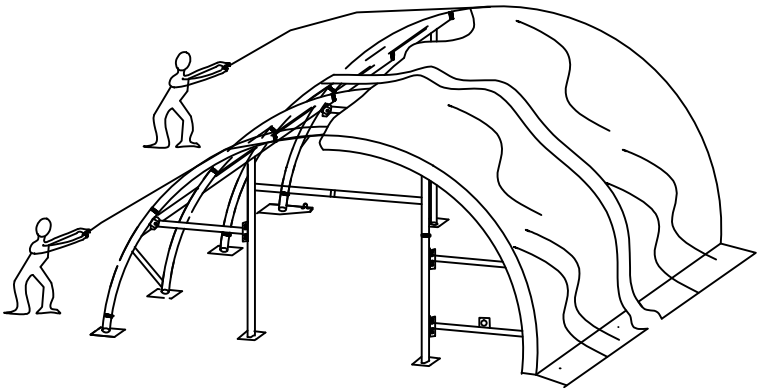

Figure7:
Pull the Roof Cover over the frame evenly

First circle the band for tie down ratchet around the tensioning tube through the cuts on the pocket of the roof cover.

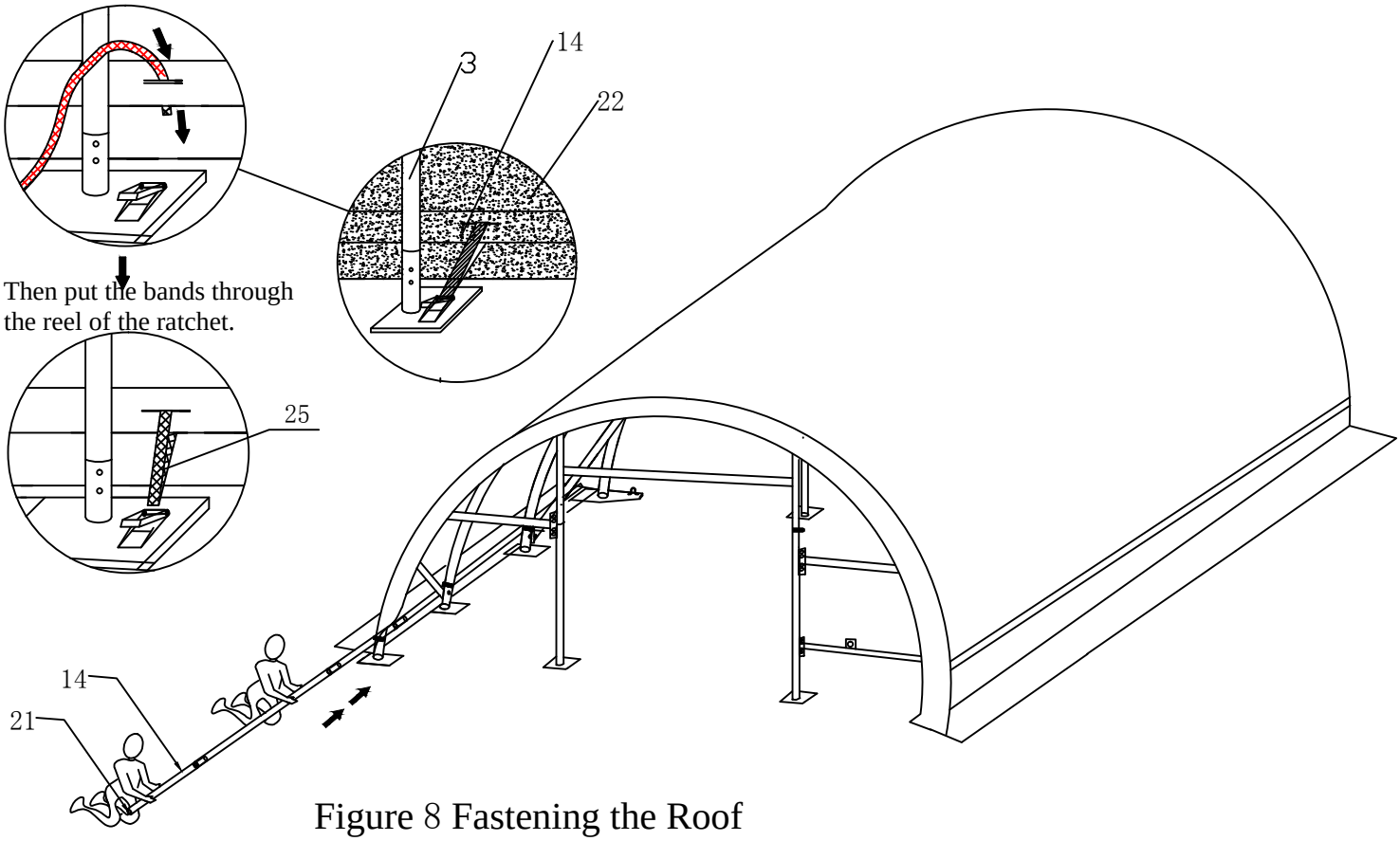

Figure 8 Fastening the Roof Cover

Step #5 --TENSION COVER ON FRAME FROM SIDE-TO-SIDE

As Figure 8 shows, when Roof Cover is over top of Frame Assembly, insert Cover Tensioning Tubes into pockets along both sides of Roof Cover. Center Roof Cover over Frame assembly both side to side and front to back. Align one side of Roof Cover evenly front to back. Add Band for Tie Down Ratchet at each point along the cover opening, as shown. Put Band for Tie Down Ratchets over Cover Tensioning Tubes at each Base Plate along one side. Bands do not attach to Tensioning Tubes, but loop around and secure at both ends on ratchet.

Next take up slack in tie bands by ratcheting the mechanisms, tightening cover. Evenly adjust ratchets on both sides of roof cover to take wrinkles out of roof cover. **DO NOT** fully tighten cover yet. Leave adequate slack so that cover can also be adjusted front to back in next step.

Step #6 --TIGHTEN ROOF COVER ON FRAME FRONT TO BACK

The roof cover is tensioned from front to back by the rope lacing to grommet flaps inside the main cover, inside the unit at both front and rear arches. Using the rope provided, lace the main cover grommet flap around the main frame front and rear arch pieces. Start in the top middle of each arch, and lace to each side. Add rope length by tying pieces together or cutting as necessary.

Lace all grommets on cover inside flap with rope. Starting at the middle top point over the door, tighten lacing only enough to take wrinkles out of the cover. Repeat for the Rear Arch. **DO NOT** over tighten lacing to pull out the grommets.

After the roof cover lacing is adjusted evenly across the grommet flap, go back and re-adjust the Tensioning Ratchets along the side edges of the Roof Cover. At this point, the main cover can be pulled taut enough to take all excess material and wrinkles out of cover. It will be necessary to repeat this step 2-3 weeks after unit assembly is complete and roof over has a chance to stretch out over the frame completely.

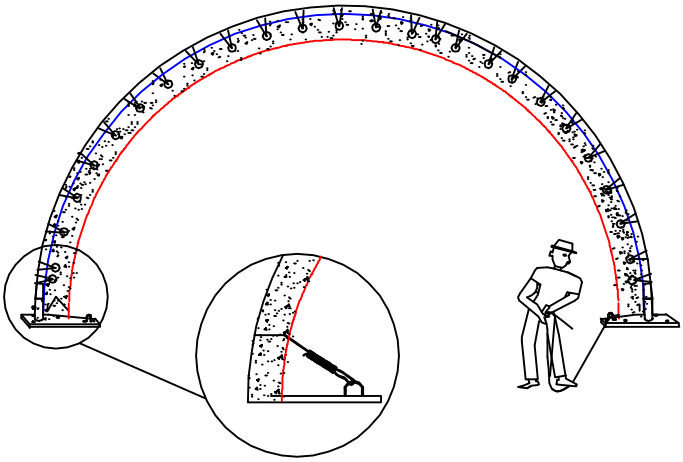

Figure 9
Fastening the two ends of the Roof Cover

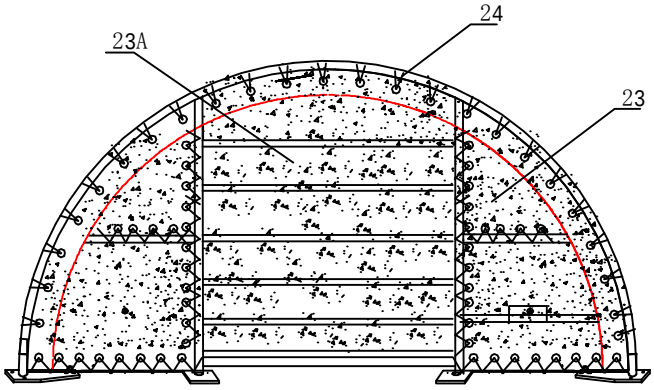

Figure 10
Installation of the Front Cover

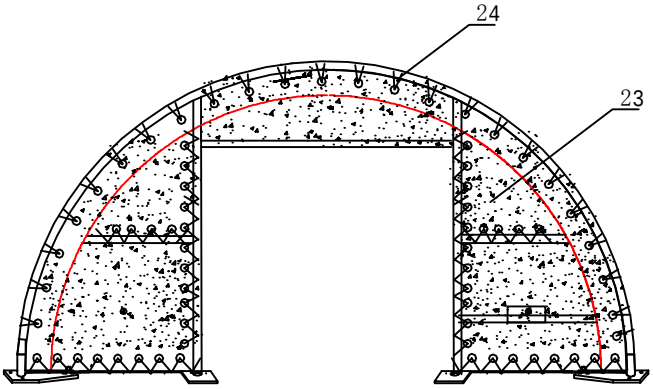

Figure 11 Open Door Cover

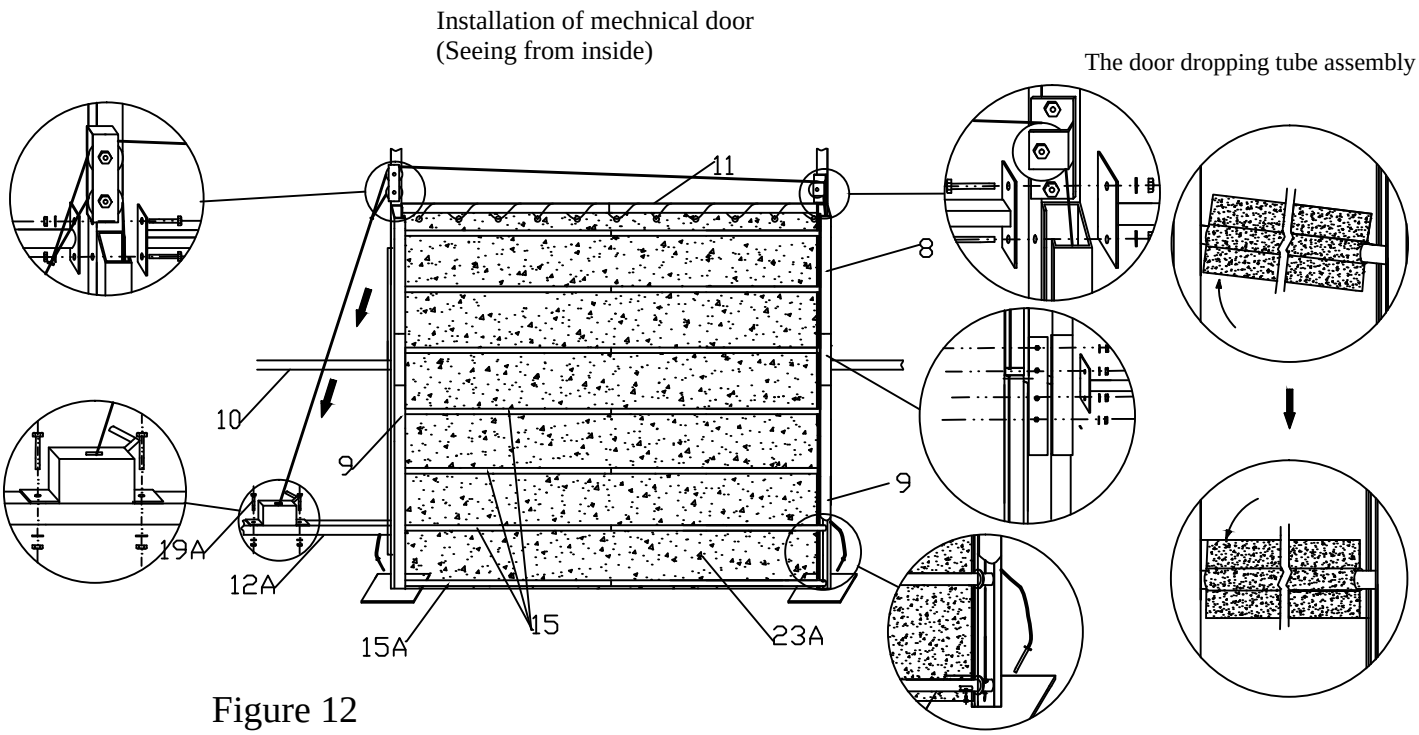

Figure 12
Installation of the Mechanical Door

Step #9 --MECHANICAL DOOR INSTALLATION STEPS

1. Install Main Door Pulleys (left and right) over the Top of the Door on each side of the Door Beam (Part #11).

2. Next mount the Winch Mechanism to the Front Panel Lower Beam (Part #12A).

3. Slide Bottom Door Dropping Tube (Part15A) into the bottom horizontal fabric pocket on the Door Cover (Part #23A). Then slide the six remaining Door Dropping Tubes (Part #15) into the remaining horizontal fabric pockets in the Door Cover。

4. Raise the Bottom Dropping Tube (#15A) to the top of the Upper Door Tracks. Put the Bottom Dropping Tube (#15A) into the tracks side to side so the ends start down the tracks. Gently allow the Door Cover to go down, and feed the six remaining Door Dropping Tubes (#15) into the Door Tracks.

5. Next install the steel wire that leads from the bottom of the door dropping tubes to the door winching assembly. Take one of the Steel Wires in the Door kit, and feed down from the top of the Door track to the Bottom Door Tube Dropping Tube (#15A) on the right hand side of the door (facing from the inside). When the steel wire goes down though the hole in the Bottom Dropping Tube, tie a knot in the steel wire so that it cannot pass back up through the hole.

6. From the Winch Assembly route leading end of the Longer Steel Cable through the Upper Roller of the double the pulley near door track and then through the Single Roller on the door track farthest from the Winch Assembly.
Then down through the Bottom Door Dropping Tube (15A).When the steel cable goes down though the hole in the Bottom Door Dropping Tube, tie a knot in the steel cable. Door can now be operating the Winch Assembly. Raise and lower the door several times to be certain door tube ends are not binding on track.. Lubricate if necessary.