MODEL：C264010

W8xL12xH3M

ASSEMBLE MANUAL

Congratulations on your purchase of our instant shelter. This unit is a combination of excellent manufacturing and design. It is comprised of a rigid frame and a durable cover. For easy assembly, we have marked all the parts with codes. With proper installation, use and maintenance, your unit will provide many years of good and suitable service.

READ ALL THE INSTRUCTIONS BEFORE ASSEMBLY !

1. The proper erection and installation of this building requires a high level of care and safety. We recommend the safety regulations be complied with during the installation. It includes but is not limited to:
   - Safety hats, protective eyewear and protective clothing
   - Safety harnesses for all elevated workers
   - Proper ladder, cage, and safety operation
2. Site selection: Choose a solid level location for your building. Do not install the building where the ground could not keep the building steady. Do not install the building where the ground could not bear the weight of the building. Do not install the building in soft grass ground or wetland.
3. Be cautious with the surroundings. Keep work area clean. Do not set up it near snow drifts, in slippery places, or in wet location. The cover of the building will protect against normal falling leaves and light debris, however, large, fast or sharp falling items etc. may cause a puncture or tear in the cover material. So, keep the building away from such harmful things. Be careful with power and heat sources. Don't keep heat sources near the tarpaulin. Don't expose to open flame.
4. Chose a windless day to install the building. It is very difficult to attach the cover in heavy wind.
5. All snow accumulation on the main cover should be removed as soon as possible. Otherwise, when old snow on the roof becomes hard with new snow falling in, it will increase the burden of the roof badly and will damage the roof.
6. Try to keep the building, especially its base, in a dry condition. This will help the building to have a longer life than keeping it in a wet conditions.
7. The user should be responsible for the parts missing or damage occurred during the installation.
8. Don't make alteration of the frame. Don't hang anything besides included parts to the frame. Damages, consequential damages, or injuries caused by improper installation, alteration, improper use, or damages caused by snow, wind, or any acts of nature are owing to the user. The building is not intended for occupancy for any length of time.

ASSEMBLY PROCEDURE

1. Prepare location and place all unit boxes near location sight. Perform an inventory check before beginning, to be certain all components are available for installation.
2. Secure base plates flanges to base surface.
3. Assemble every group of arch.
4. Begin frame assembly with front end arch, first interior arch, purlins, etc.
5. Add to assemble other groups of arches.
6. Install main cover over frame.
7. Install end covers over end panels.

Read all the detailed instructions and notices in the following assembly instructions!

MAINTENANCE AND CARE

1. If some parts or the cover were accidently damaged during the use, contact the local supplier for advises on the repairing method or replacements, so that to prevent from further damage and keep the building in a good condition.
2. When replacing the parts, make certain the whole frame and the parts connected to the replaced parts be well fixed or supported.
3. Same with when attaching the cover, choose a windless day to replace the cover. Begin with making certain all the bolts of the frame and the tensioning equipments be well fixed. When taking off the cover, make sure the related ropes, etc. be taken off, and the cover will not be blocked during the way. Avoid taking off the cover with heavy big power equipments.
4. For the building with mechanical door. Keep the door closed if it is not used for long time. This helps the mechanical door to have a longer life.
5. To enlongate the life of the cover, put small duct tape or foam rubber (provide it by yourself) on the frame that comes to in contact with cover. The tape and foam rubber acts as a cushion to avoid rubbing damage to the cover over years.
6. Periodically(once in half a year or more often), the building should be completely inspected and maintained internally and externally to make certain the building remains properly installed and secured. Including: check all bolts and hardware connectors to be certain they are in place and tightened, the base plates are still fixed firmly, check and adjust the ropes if in need, clean the cover with suitable washing. Allowing dirt and debris to sit on cover over an extended time will damage cover irreparably.

Thanks again for choosing this quality product. The following is the detailed assembly instructions for you starting the assembly.

Code	PART LIST	Quantity
1	Top roof tube	7
2	Roof curving tube	14
3	Sidewall tube	14
4	Horizontal tube	30
L1	Base flange in left corner at front panel	1
L2	Base flange in left corner	4
L3	Base flange in left corner at back panel	1
R1	Base flange in right corner at front panel	1
R2	Base flange in right corner	4
R3	Base flange in right corner at back panel	1
5	Pallet for base flange	20
6	Base flange clips+ pallets	14+14
7	Tie down ratchet	14
8	Door dropping tube	12+2
9	Utype bolt M10×70	14+28+28
10	Hexagon bolt M10×70	14
10A	Hexagon bolt M10×30	28
11	Hexagon bolt M12×50	24
12	Supporting tube	20
13	Supporting tube clip	40
14	Hexagon bolt M10×75	86
15	Carriage boltM10×85	36
16	Hexagon bolt M10×30	40
17	Plastic cap	4
18	Roof cover	1
21	Rope for fastening the roof cover, the door cover and the	5
22	Band for tie down ratchet	14
23	Tie down ratchets for roof cover	4

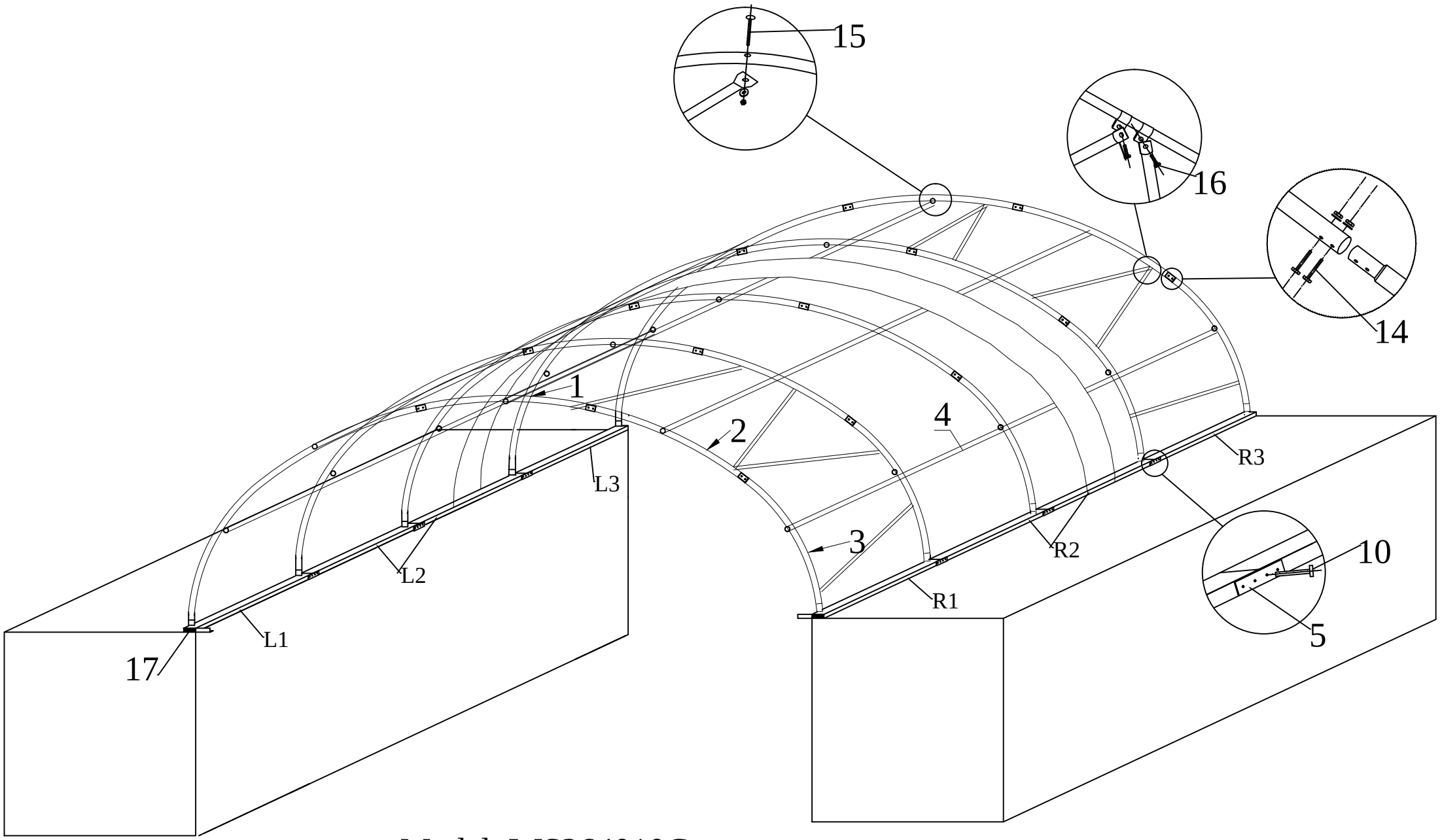

Model: WS264010C
Size: L12m x W8m x H3m

STEP 1 - CONTAINER POSITIONING

1. Ensure the site is level and firm.
2. Place containers 7720apart.

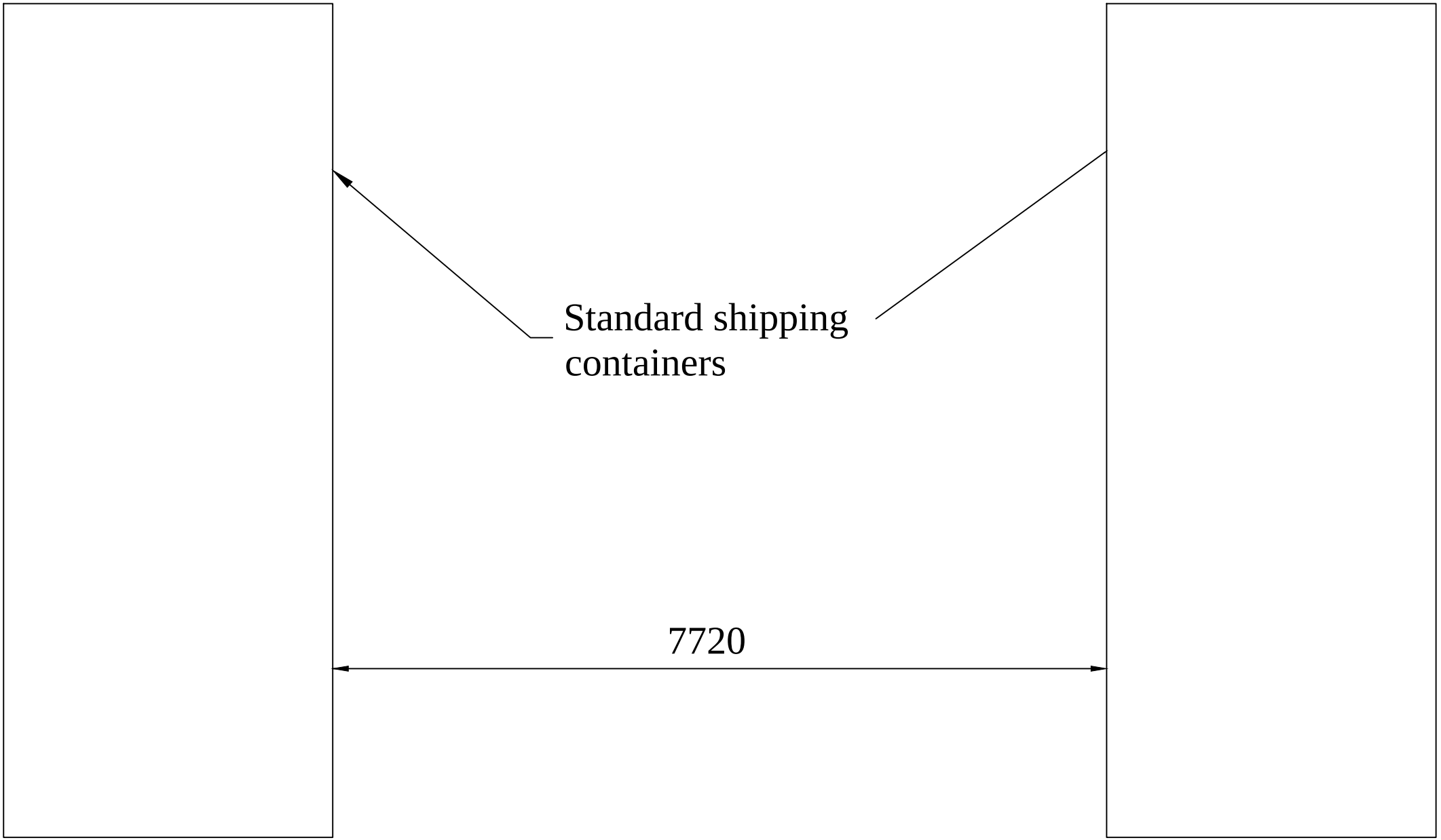



STEP #2 - ASSEMBLE THE BASE RAILS

1. Connect the Base Rail (L1,L3,R1,R3,L2,R2) by Connector(part #5) and Bolts(part #10A).
2. Fix the assembled base rail onto the container by Clamp set(part #9)
   at end of base rail by Bolts(part #10)

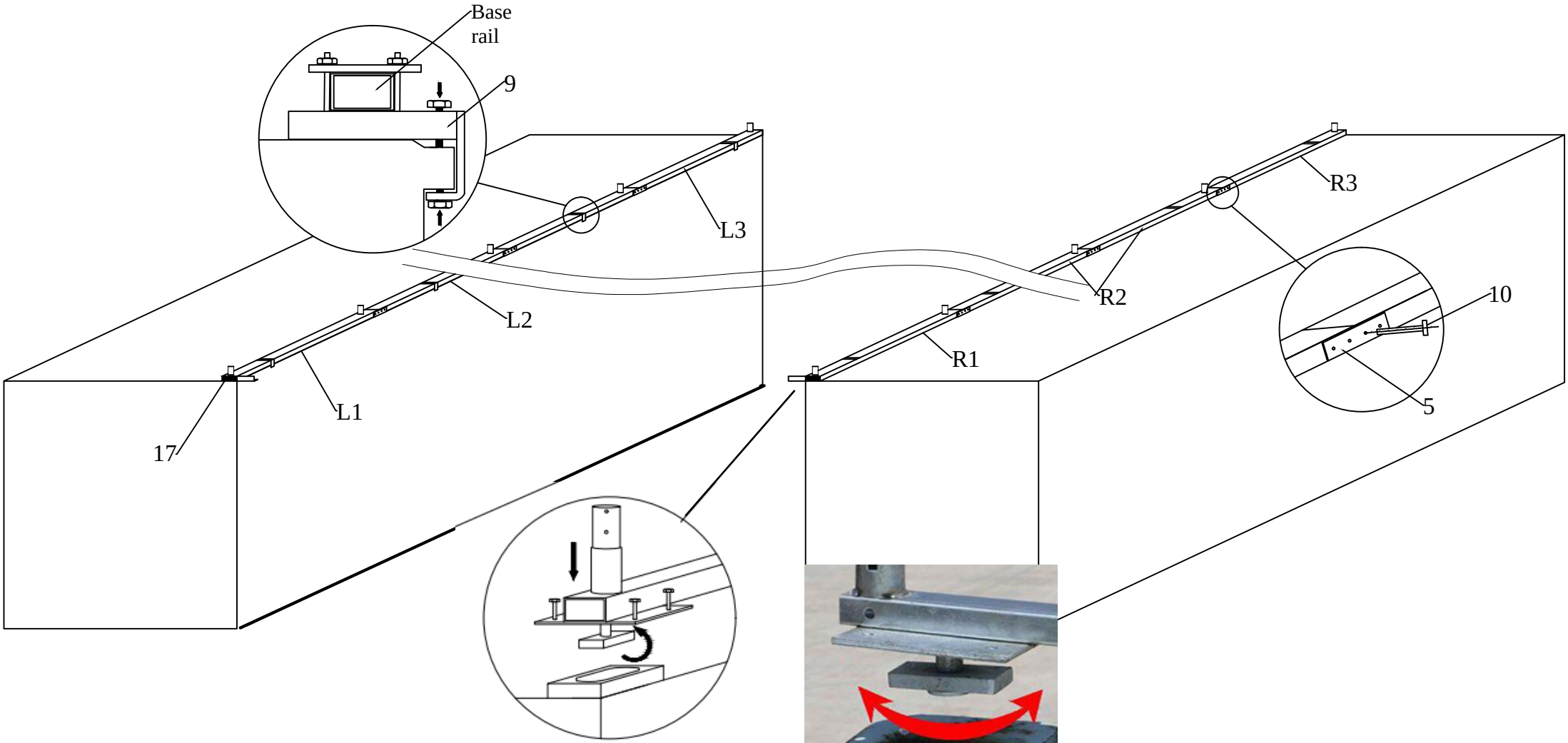

STEP 3 - FRAME ASSEMBLY

1. Assemble ALL arches on the ground first.
2. Assemble parts #1, #2, #3 and bolt them together using bolt part #14.

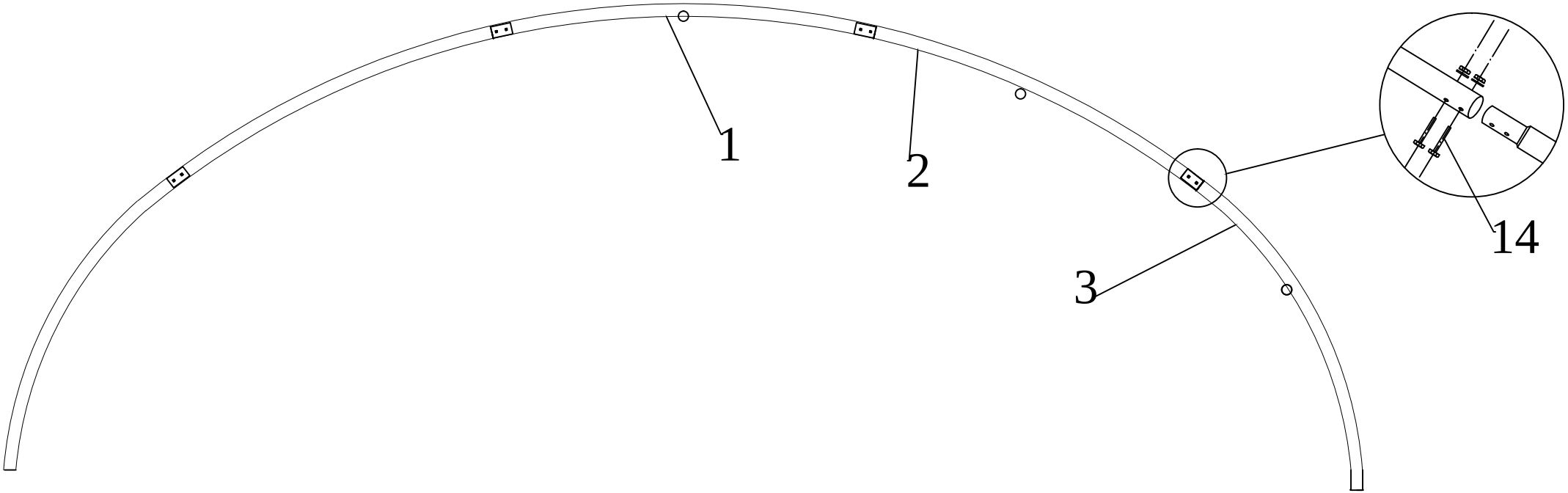

STEP 4 - FRAME ASSEMBLY

1. Secure the assembled arch onto the Base rails by Bolts (#14)
2. Connect all the arches with each other by Purlins part #4 and bolts part #15
3. and bolt part #16.

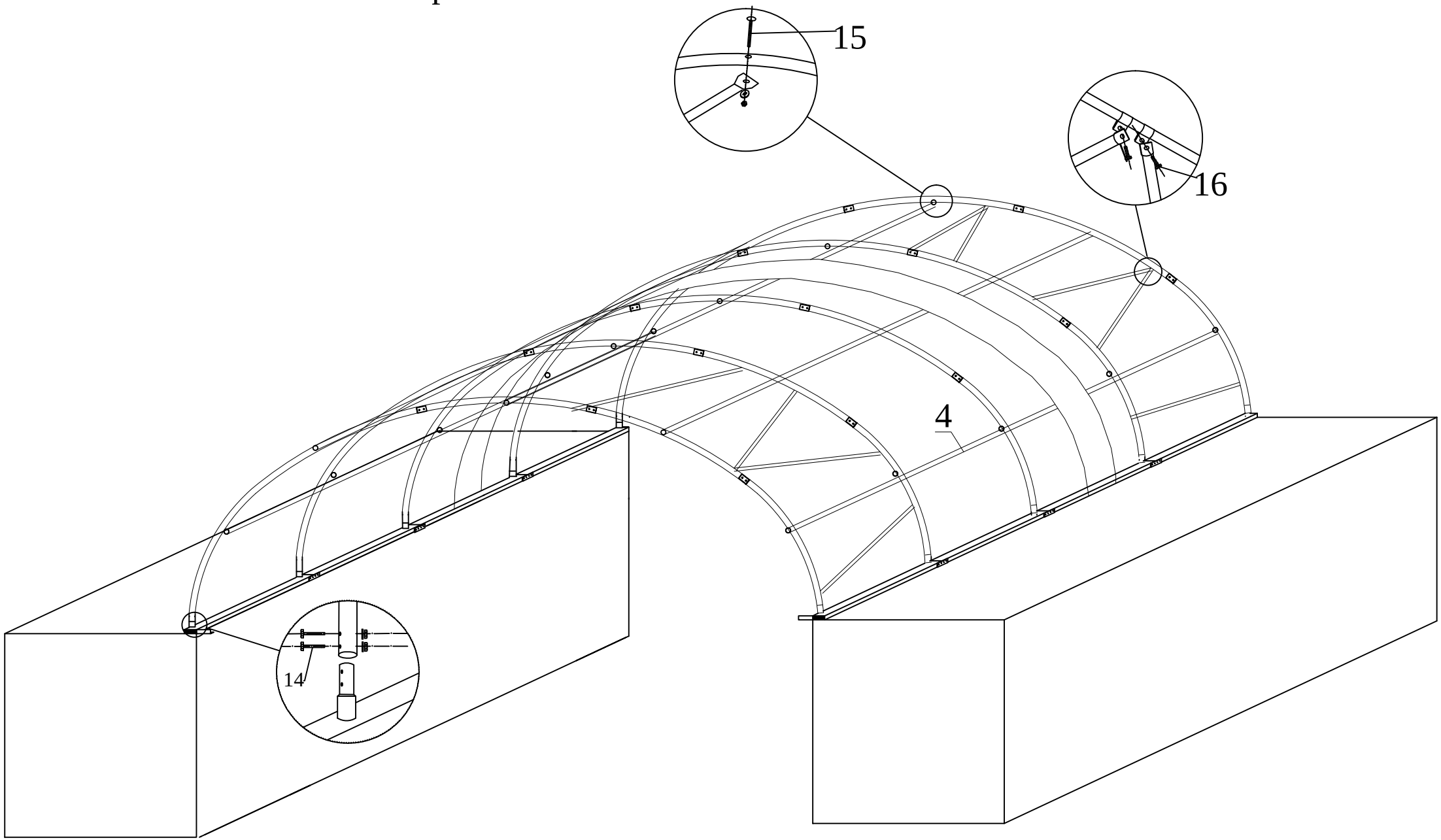

STEP 5 - COVER INSTALLATION

1. Slide the cover over the frame form one side to the other, not end to end.
2. Tension the ends FIRST by pulling and tensioning the ends of the cover using the nylon webbing already threaded through the cover. Tension evenly at both ends and tie off securely.
3. Insert lower tensioning tube part #8 into the sleeves of the cover.
4. Push tube to very end of sleeve. Feed tube back into sleeve end(centre the tube in sleeve).
5. Insert nylon webbing over tube. Feed ends into tie down. Do not fully tension.
6. Put the Plastic cap (#17) into the two ends of cover tensioning tube.

Then make the cuts using scissors along the outlines.

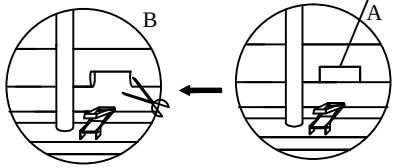

draw the outline of cuts

Before inserting the cover tensioning tube(part #8) into pocket of roof cover, you need to make cuts for band of Ratchet on the cover first. Firstly please draw the outline of the cuts according to the position of Ratchet. The position of cuts should be right upon the ratchets.

First circle the band for tie down ratchet(part#22) around the tensioning tube through the cuts on the pocket of the roof cover.

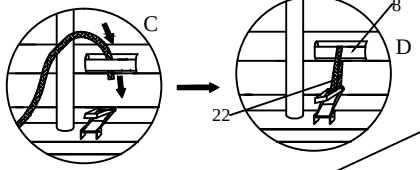

Then put the bands through the reel of the ratchet, and tension the band by ratchet.

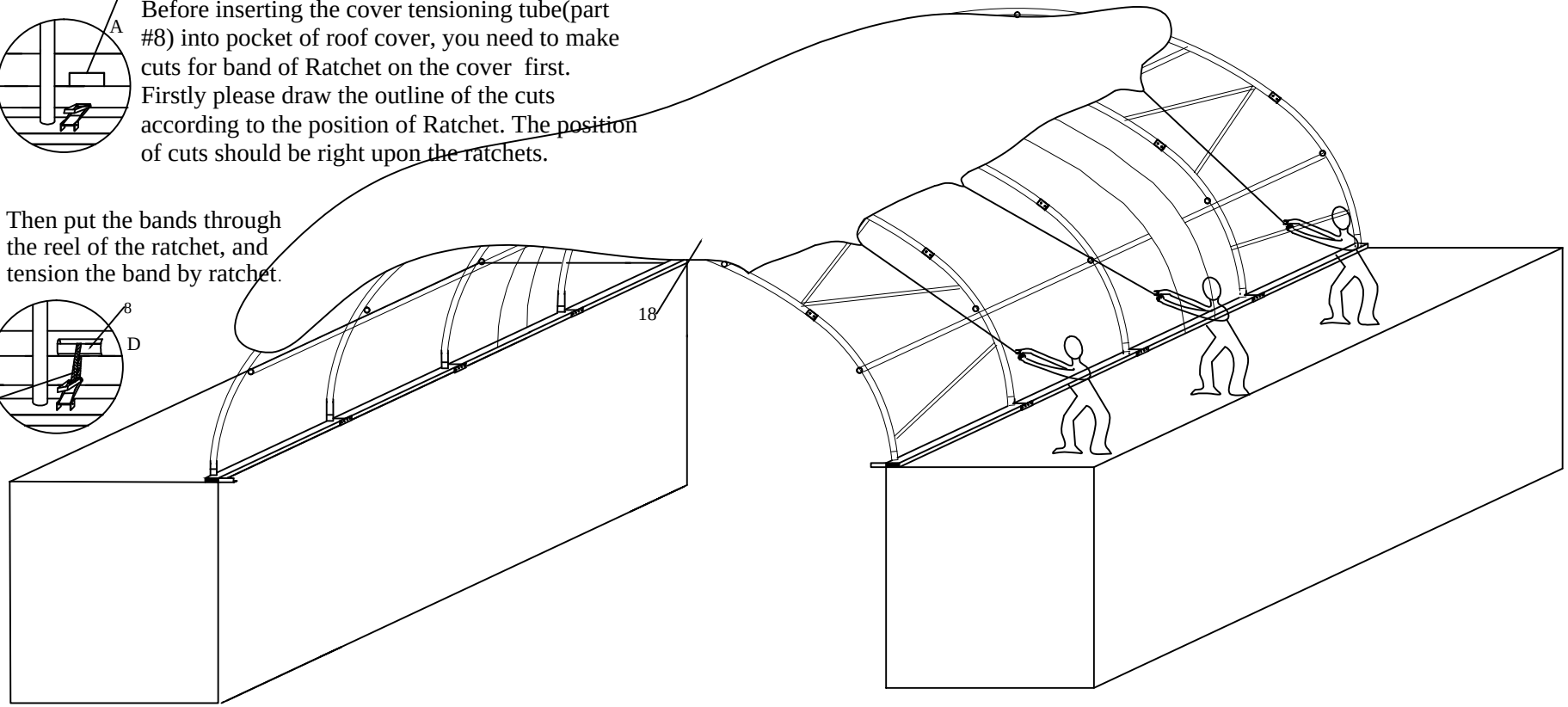

NOTE: Ensure the cover is the right way around and have an even amount of cover overhanging at both ends of the frame. Sleeves are on the underside and are on the sides of the cover only.

STEP 6 - COVER INSTALLATION Continued

1. Lace cover to end arches through eyelets then fully tension.
2. Fully tension tie down evenly on each side.
3. Tension the corners of roof cover by the rachets at 4 .
4. Double check all knots are secure and cover is well tensioned and stretched onto frame.

NOTE: <u>The cover shall always been well tensioned!</u> If there is any damage to the straps and ropes, they should be repaired/replaced ASAP, to prevent any further damage to cover

