MODEL:214006C

W6.49×L12×H2m

ASSEMBLE MANUAL

Congratulations on your purchase of our instant shelter. This unit is a combination of excellent manufacturing and design. It is comprised of a rigid frame and a durable cover. For easy assembly, we have marked all the parts with codes. With proper installation, use and maintenance, your unit will provide many years of good and suitable service.

READ ALL THE INSTRUCTIONS BEFORE ASSEMBLY !

1. The proper erection and installation of this building requires a high level of care and safety. We recommend the safety regulations be complied with during the installation. It includes but is not limited to:
   - Safety hats, protective eyewear and protective clothing
   - Safety harnesses for all elevated workers
   - Proper ladder, cage, and safety operation
2. Site selection: Choose a solid level location for your building. Do not install the building where the ground could not keep the building steady. Do not install the building where the ground could not bear the weight of the building. Do not install the building in soft grass ground or wetland.
3. Be cautious with the surroundings. Keep work area clean. Do not set up it near snow drifts, in slippery places, or in wet location. The cover of the building will protect against normal falling leaves and light debris, however, large, fast or sharp falling items etc. may cause a puncture or tear in the cover material. So, keep the building away from such harmful things. Be careful with power and heat sources. Don't keep heat sources near the tarpaulin. Don't expose to open flame.
4. Chose a windless day to install the building. It is very difficult to attach the cover in heavy wind.
5. All snow accumulation on the main cover should be removed as soon as possible. Otherwise, when old snow on the roof becomes hard with new snow falling in, it will increase the burden of the roof badly and will damage the roof.
6. Try to keep the building, especially its base, in a dry condition. This will help the building to have a longer life than keeping it in a wet conditions.
7. The user should be responsible for the parts missing or damage occurred during the installation.
8. Don't make alteration of the frame. Don't hang anything besides included parts to the frame. Damages, consequential damages, or injuries caused by improper installation, alteration, improper use, or damages caused by snow, wind, or any acts of nature are owing to the user. The building is not intended for occupancy for any length of time.

ASSEMBLY PROCEDURE

1. Prepare location and place all unit boxes near location sight. Perform an inventory check before beginning, to be certain all components are available for installation.
2. Secure base plates flanges to base surface.
3. Assemble every group of arch.
4. Begin frame assembly with front end arch, first interior arch, purlins, etc.
5. Add to assemble other groups of arches.
6. Install main cover over frame.
7. Install end covers over end panels.

Read all the detailed instructions and notices in the following assembly instructions!

MAINTENANCE AND CARE

1. If some parts or the cover were accidently damaged during the use, contact the local supplier for advises on the repairing method or replacements, so that to prevent from further damage and keep the building in a good condition.
2. When replacing the parts, make certain the whole frame and the parts connected to the replaced parts be well fixed or supported.
3. Same with when attaching the cover, choose a windless day to replace the cover. Begin with making certain all the bolts of the frame and the tensioning equipments be well fixed. When taking off the cover, make sure the related ropes, etc. be taken off, and the cover will not be blocked during the way. Avoid taking off the cover with heavy big power equipments.
4. For the building with mechanical door. Keep the door closed if it is not used for long time. This helps the mechanical door to have a longer life.
5. To enlongate the life of the cover, put small duct tape or foam rubber (provide it by yourself) on the frame that comes to in contact with cover. The tape and foam rubber acts as a cushion to avoid rubbing damage to the cover over years.
6. Periodically(once in half a year or more often), the building should be completely inspected and maintained internally and externally to make certain the building remains properly installed and secured. Including: check all bolts and hardware connectors to be certain they are in place and tightened, the base plates are still fixed firmly, check and adjust the ropes if in need, clean the cover with suitable washing. Allowing dirt and debris to sit on cover over an extended time will damage cover irreparably.

Thanks again for choosing this quality product. The following is the detailed assembly instructions for you starting the assembly.

Part Code	Description	Quantity
1	Top roof arch	7
2	Roof curving arch	14
3	Purlin tube	30
L1	The left corner double truss base flange(Front panel)	1
L2	The left base flange	4
L3	The left corner base flange(Back panel)	1
R1	The right corner double truss base flange(Front panel)	1
R2	The right base flange	4
R3	The right corner double truss base flange(Back panel)	1
4	The splint for base flange	40
5	Clamp for base plate	14+28
6	Ratchet	14
7	Tensioning tube	12+2
8	U-bolts for base flange 60*120MM +M8 bolts	28+56+56
9	Hex bolt M10*70mm for base flange	28
10	Hex bolt M10*30mm for base flange	28
10A	Hex bolt M10*110mm for base flange	90
11	Hex bolt M12*50mm for the twist locker	28
12	Diagonal bracing tube	4
13	Tube clip	8+10
14	Hex bolt M10*75mm	110
15	Carriage bolt M10*85mm	40
15A	Hex bolt M14*30mm	60
15B	Hex bolt M10*85mm	30
16	Hex bolt M10*30mm for clips	28
16A	Self-tapping screw	50
17	Pastic plug of tubes	4+8+6
18	Roof cover	1sets
19	Anti rust felt	14
20	Rope	10
21	Strap	14
22	Small Ratchets for the cover corners	4
23	The upper frame of the front winch door	2
24	The lower frame of the front winch door	2

	Door frame connector	2sets
25	The upper upright tube of the front panel	1
25A	The side upright tube for crank handle	1
26	The front door beam	1+1
27	The front winch door beam	1
28	The vertical hanger tube of the front door beam	2
29	The horizontal tube for crank handle	1
30	The base flange of the front winch door	2
31	The base flange of the front and back wall	4
32	The inner base flange of back wall	3
33	The tensioning tube of the front wall	2
33A	The tensioning tube of the back wall	2+1
34	The dropping tube of winch door	4+4
34A	The bottom dropping tube	1+1
35	Hand-cranked handle and pulley	1set
36	Long spiral ground nails M14*450mm / or anchor	18
37	The front cover	1
38	The front winch door cover	1
39	The back cover	1
40	Edge banding with Velcro	1set
41	The lower upright tube of the back wall	3
42	The outside upright tube of the back wall	2
43	The middle upper vertical tube of the back wall	1
43A	The upper upright tube of the back wall	2
44	The horizontal tube of back wall	6
45	Edge banding of the winch door	2+2

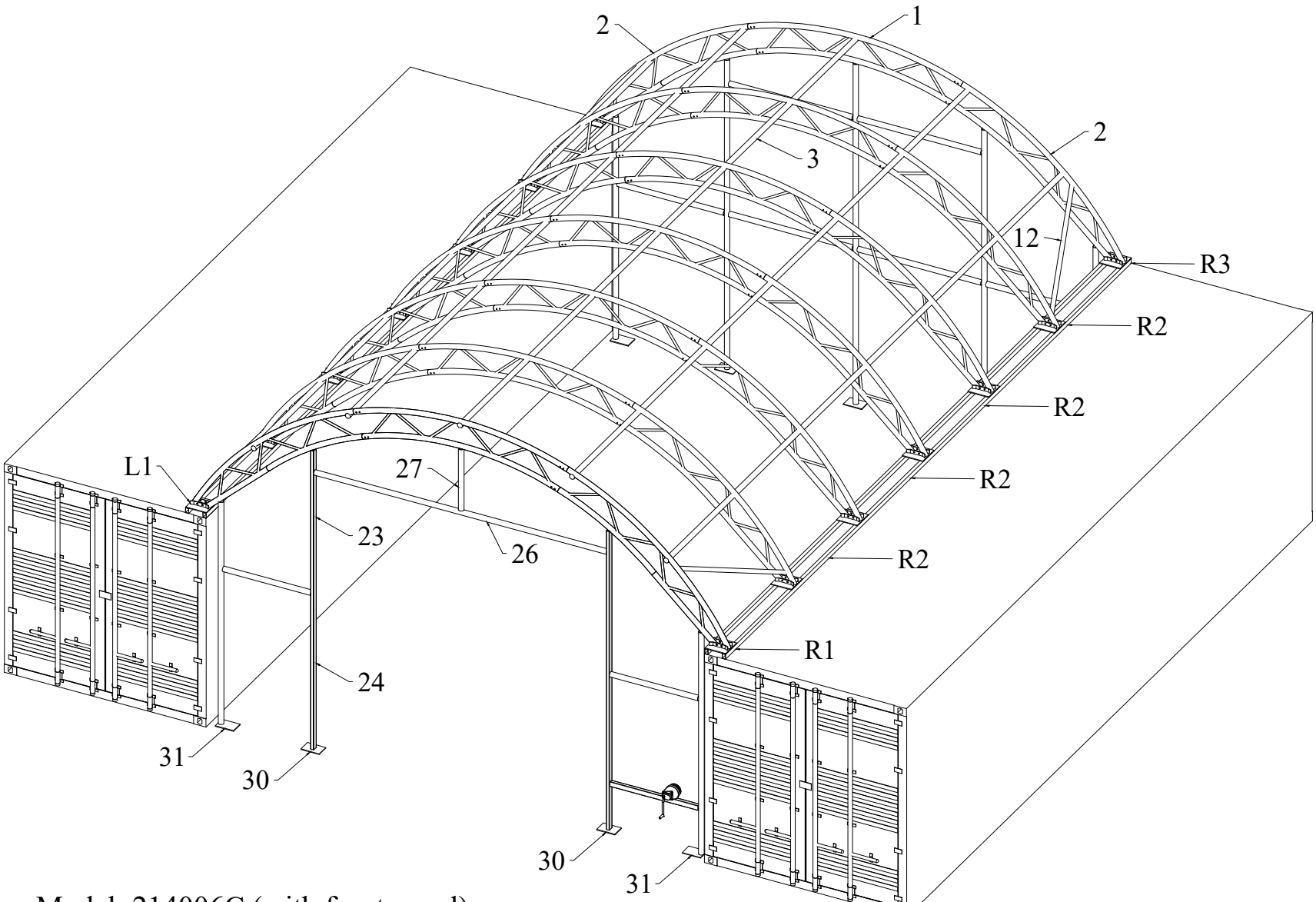

Model: 214006C (with front panel)
Size: L12m x W6.49m x H2m

Figure 1 Sketch of Trussed Frame Shelter Size: L12 x W6.49 x H2m Sit the building boxes in the chosen location. Remove all the components from packaging to ensure all components are present by checking with the Part List.

STEP 1 - SECURE THE BASE RAIL TO TOP OF CONTAINER

1.Ensure the site is level and firm.

2. Connect the Base Rail (L1,L2,L3,R1,R2,R3) by Connector(part #4) and Bolts(part #10A).

3. Fix the assembled base rail onto the container by Clamp set(part #5)

4. There are 4 locking systems at 4 corners, insert the locking device into the corner of container, turn 90 degree, then fasten the 6 bolts.

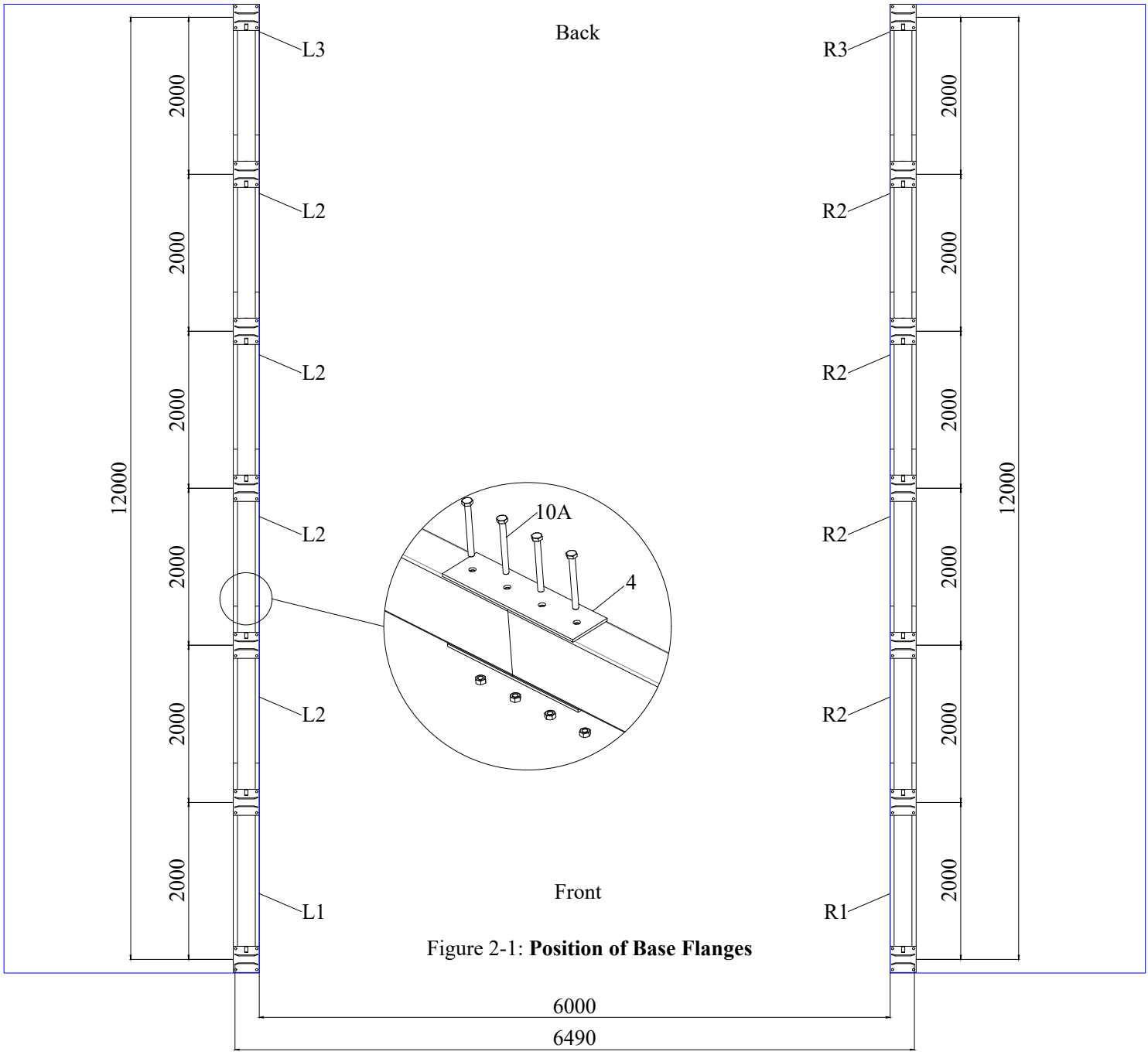

Figure 2-1: **Position of Base Flanges**

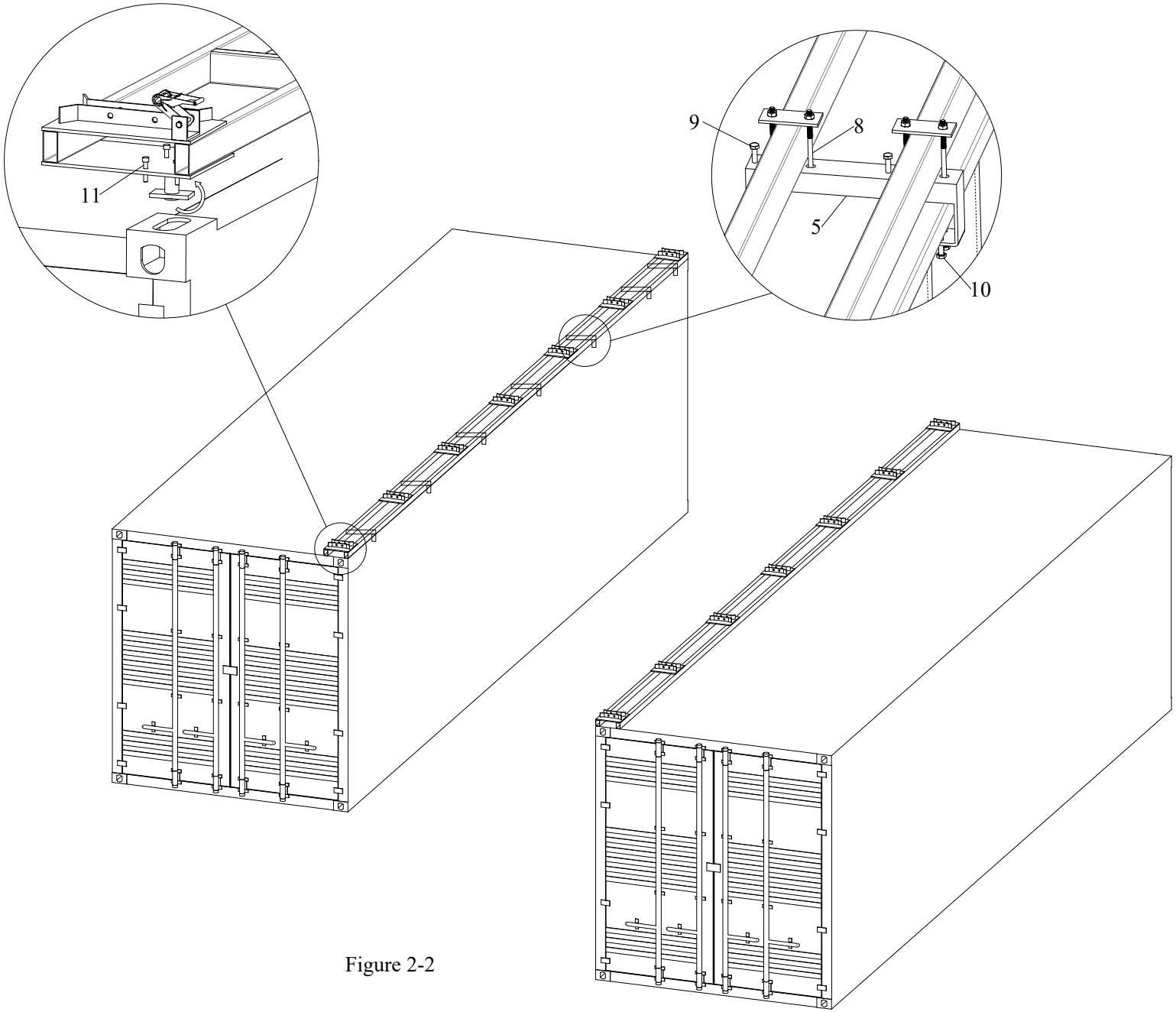

Figure 2-2

STEP #2 --ARCH ASSEMBLY

1.Assemble ALL the arches including the base plates, and LAY them on the ground first. DONOT erect them until you finish all the arches assembly.
2.Assemble parts 1/2/3 and bolt them together using bolt part #14.

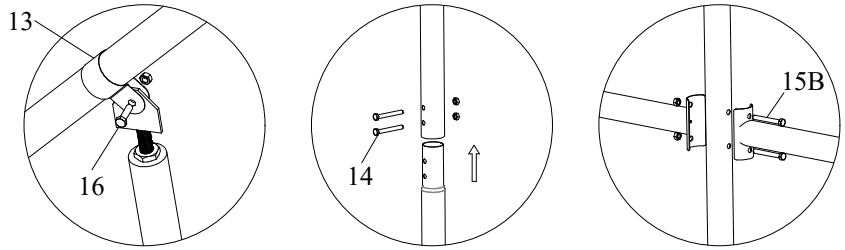

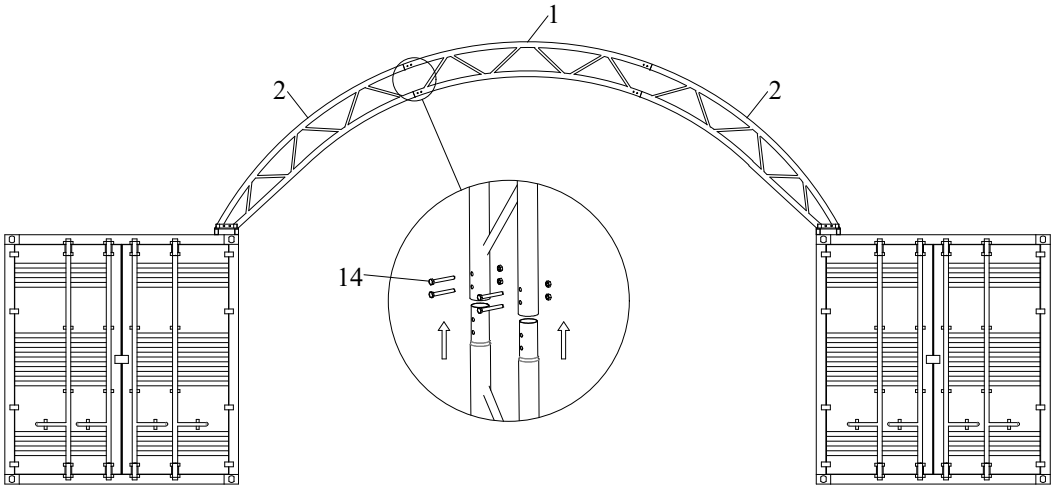

FIGURE.3 INTERIOR ARCH

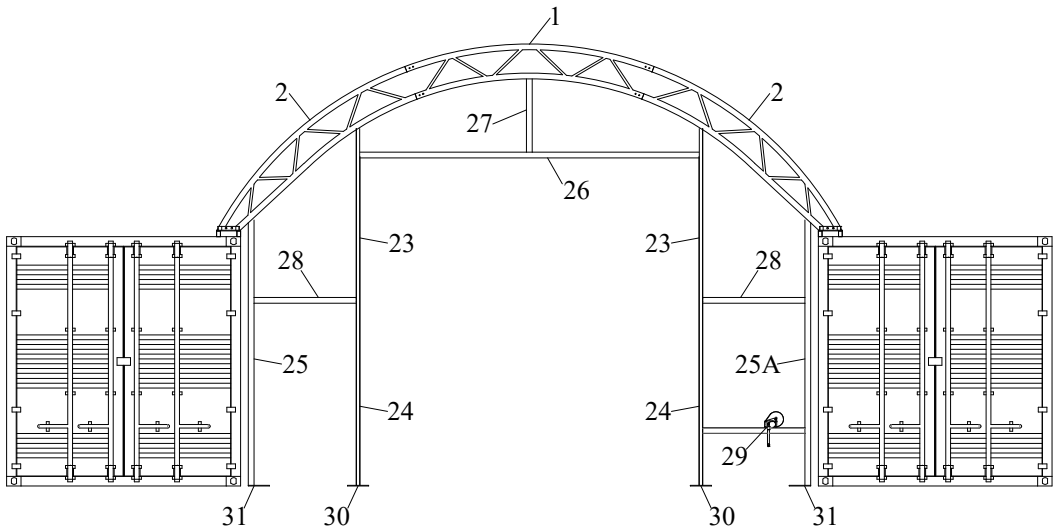

FIGURE.4 RAIL AND BEAM FOR FRONT PANEL

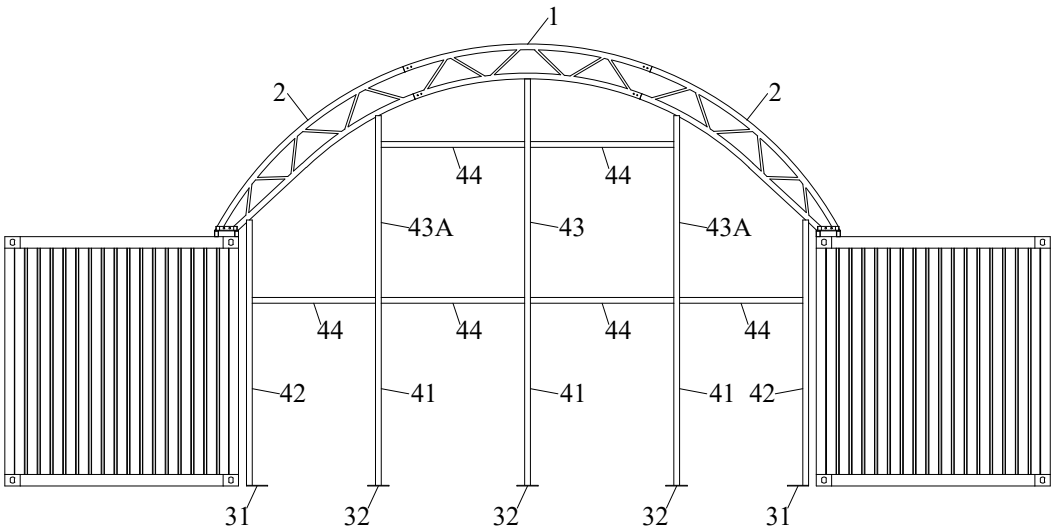

FIGURE.5 RAIL AND BEAM FOR BACK PANEL

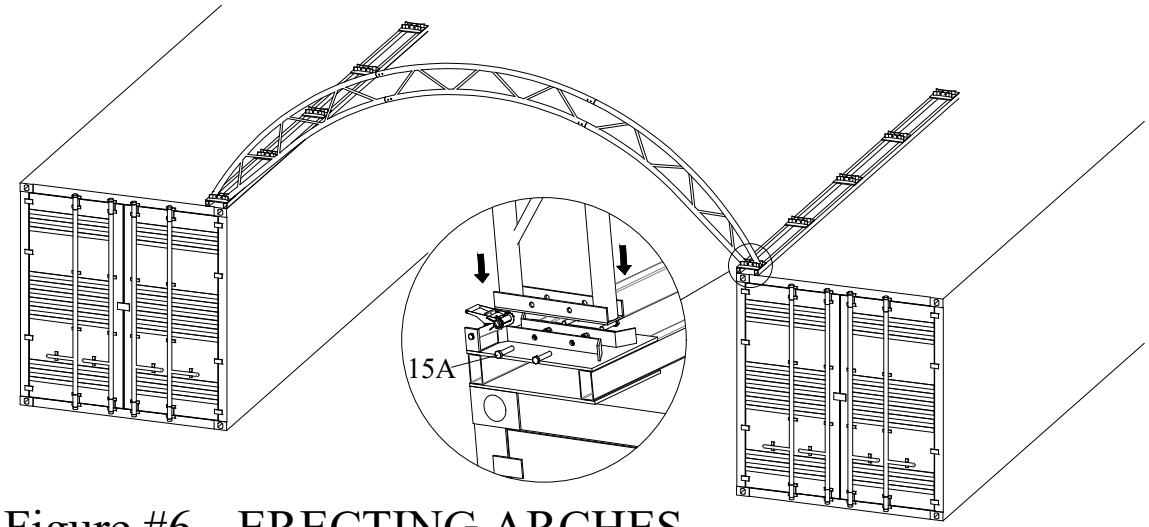

Figure #6 --ERECTING ARCHES

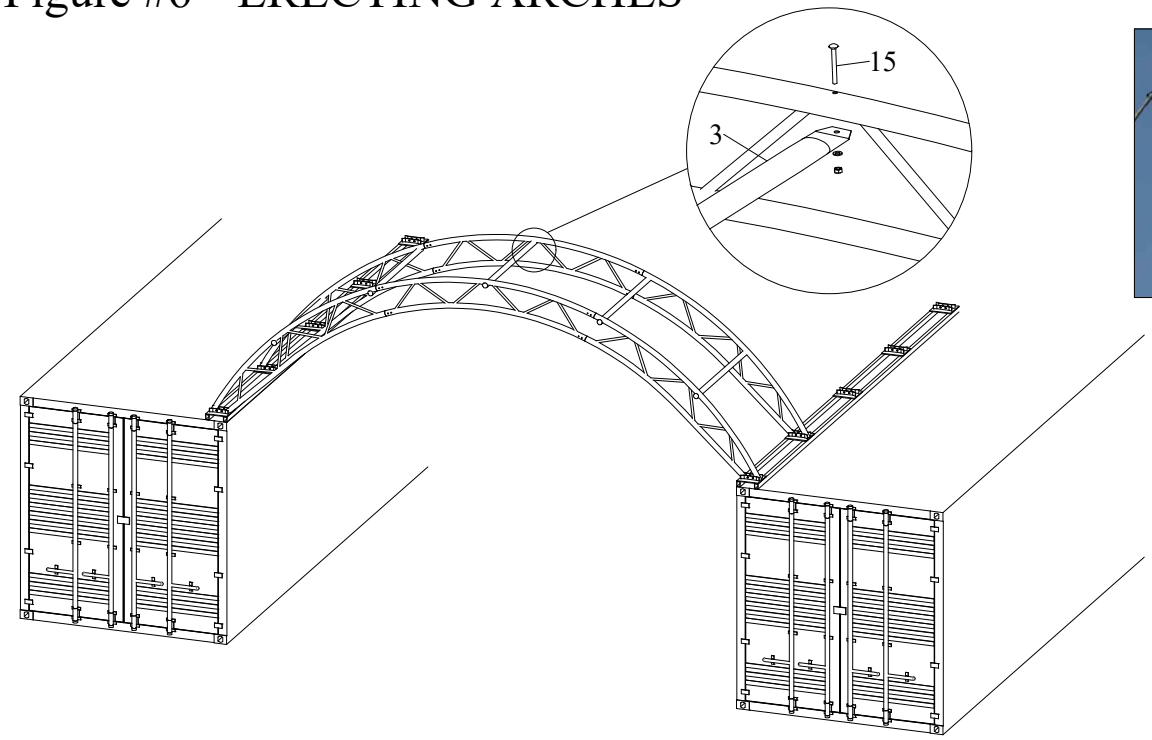

Figure #7 --ASSEMBLING ROOF PURLINS

STEP 3 - FRAME ASSEMBLY Continued

1. Secure each portal into the spigots of the base plates.

- first secure one side, then ease in the other side to fit onto the spigot of the opposite side.

2. Bolt in position using part #15A.

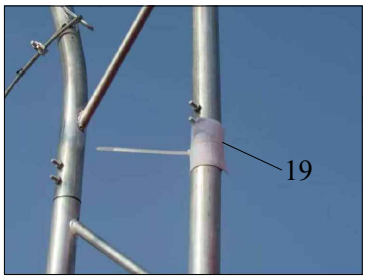

APPLYING ANTI-WEAR PAD

Installation tip: it is critical to monitor and maintain the anti wear Pads overtime as it is much more cost effective to replace anti wear Pads than an entire tarp.

STEP 4 Immediately after erecting the front arch, erect the 2nd arch in the same way. Then connect the two erected arches using Roof Purl in Tubes as figure 7 shows. Secure the Roof Purl in tubes into place using carriage bolts and nuts (Part #15).

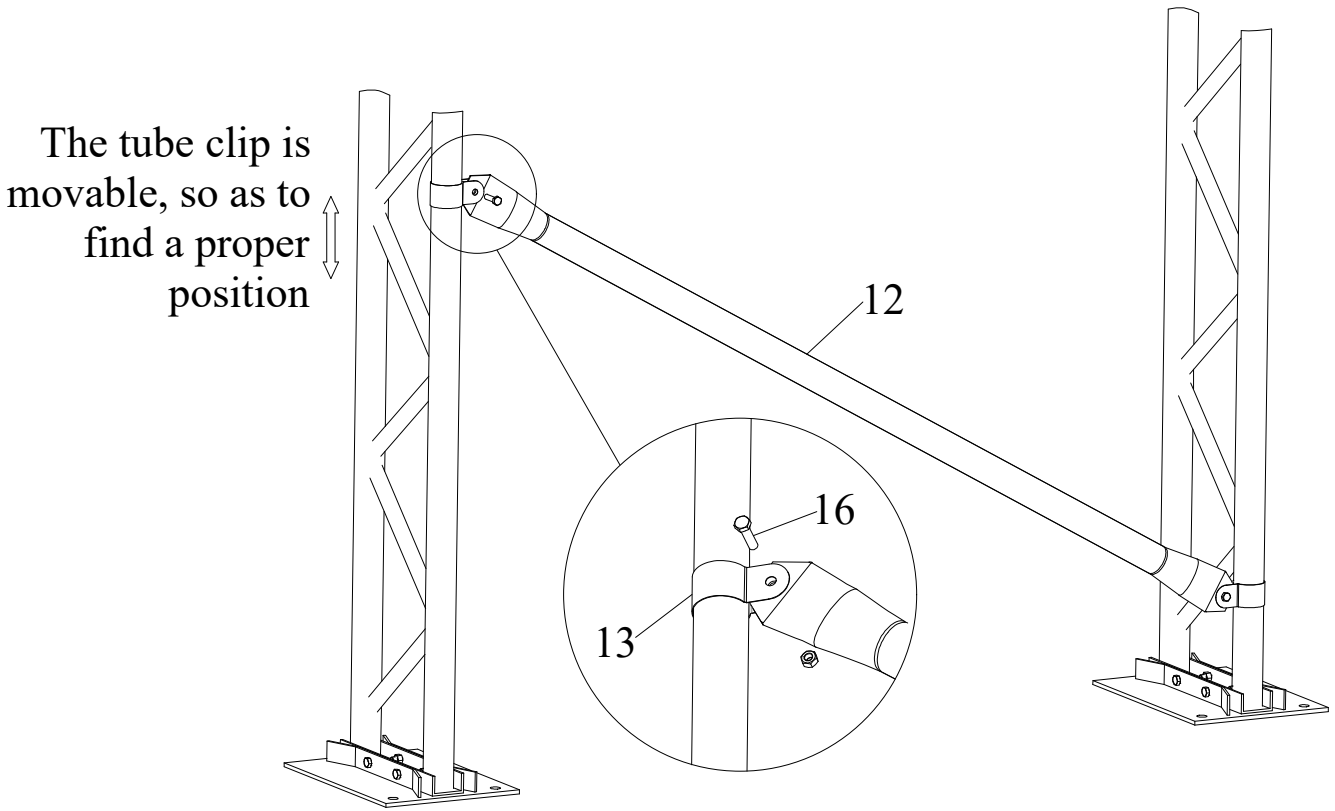

Figure 8: Wind Brace Supports(Part 12)

Next install the Wind Brace supports that connect the Front Arch to the first Interior Arch. The Wind Braces give the arch assemblies strength as a unit.Use Bolt M10X30 (Part #16) at the end of each Wind Brace Support to secure.

Continue to install other Arches Assemblies in the same manner. Overlap pinched ends of Roof Purlin onto same carriage bolts inside frame assembly.

Next check entire frame assembly for square and plumb. Adjust Wind Braces and Roof Purlin as necessary to being frame into plumb. Next tighten frame bolts adequately.

STEP 5 - COVER INSTALLATION

When ready to install Roof Cover, unpack cover and lay parallel to building frame on one side.
Cover must be pulled over top of frame assembly without being snagged or stressed on any frame members. Use several ropes over top of frame as shown in picture below. Having another person inside frame on a ladder to assist in getting Roof Cover over frame will insure the cover will go on without any damage.

NOTE: Ensure the cover is the right way around and have an even amount of cover overhanging at both ends of the frame. Sleeves are on the underside and are on the sides of the cover only.



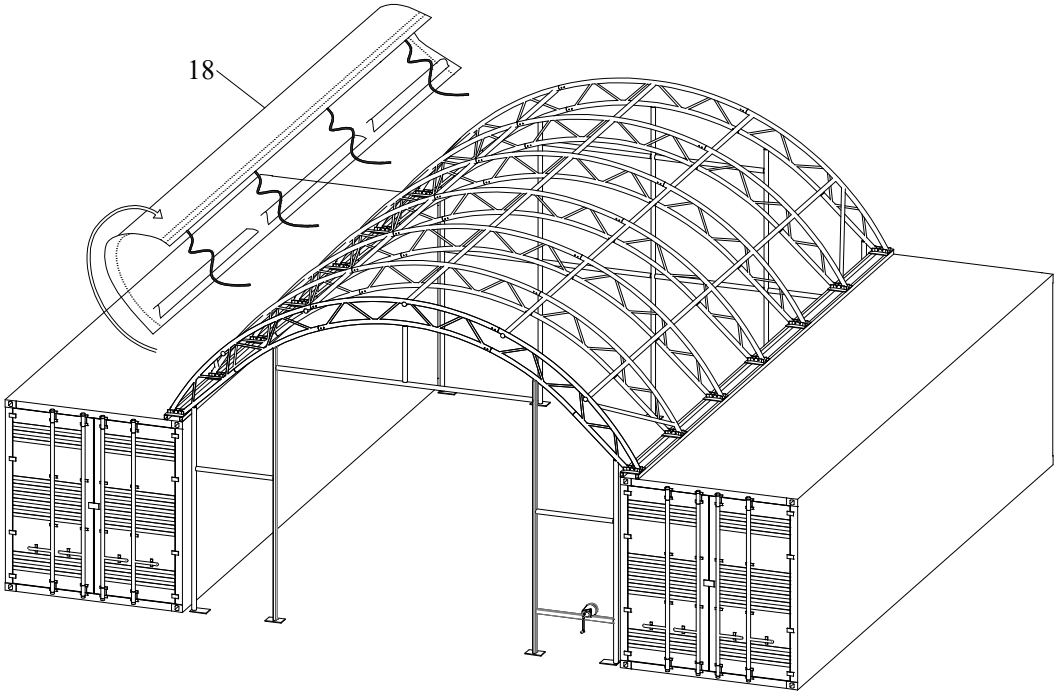

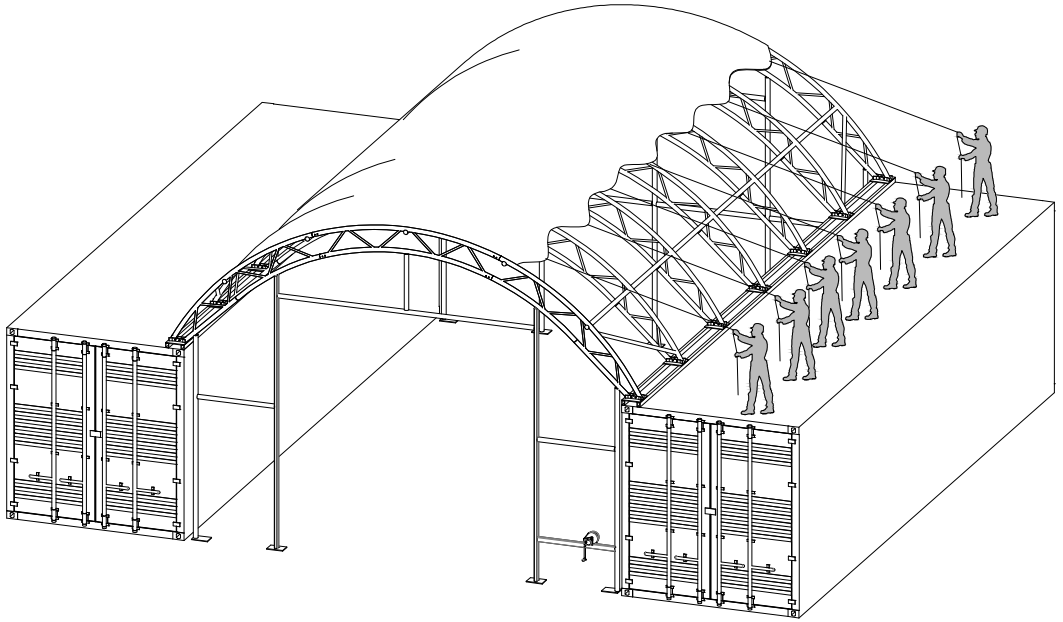

Figure 9 Pull the Roof Cover over the frame evenly

Step 5-1 --TENSION COVER ON FRAME FROM SIDE-TO-SIDE

When Roof Cover is over top of Frame Assembly, insert Cover Tensioning Tubes into pockets along both sides of Roof Cover. Center Roof Cover over Frame assembly both side to side and front to back. Align one side of Roof Cover evenly front to back. Add Band for Tie Down Ratchet at each point along the cover opening, as shown. Put Band for Tie Down Ratchets over Cover Tensioning Tubes at each Base Plate along one side. Bands do not attach to Tensioning Tubes, but loop around and secure at both ends on ratchet.

Next take up slack in tie bands by ratcheting the mechanisms, tightening cover. Evenly adjust ratchets on both sides of roof cover to take wrinkles out of roof cover. DO NOT fully tighten cover yet. Leave adequate slack so that cover can also be adjusted front to back in next step.

Step 5-2 --TIGHTEN ROOF COVER ON FRAME FRONT TO BACK

The roof cover is tensioned from front to back by the rope lacing to grommet flaps inside the main cover, inside the unit at both front and rear arches. Using the rope provided, lace the main cover grommet flap around the main frame front and rear arch pieces. Start in the top middle of each arch, and lace to each side. Add rope length by tying pieces together or cutting as necessary.

Lace all grommets on cover inside flap with rope. Starting at the middle top point over the door, tighten lacing only enough to take wrinkles out of the cover. Repeat for the Rear Arch. DO NOT over tighten lacing to pull out the grommets.

After the roof cover lacing is adjusted evenly across the grommet flap, go back and re-adjust the Tensioning Ratchets along the side edges of the Roof Cover. At this point, the main cover can be pulled taut enough to take all excess material and wrinkles out of cover. It will be necessary to repeat this step 2-3 weeks after unit assembly is complete and roof cover has a chance to stretch out over the frame completely.

Then make the cuts using forfex along the outlines.

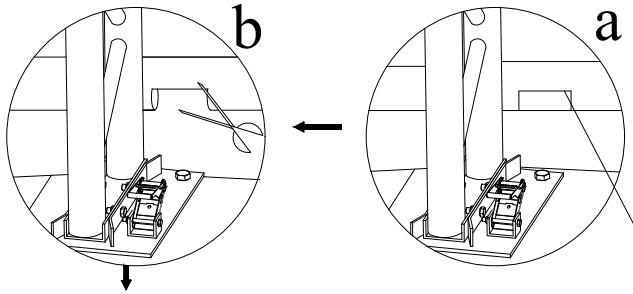

Before inserting the cover tensioning tube(Part #7) into pocket of roof cover, you need to make cuts for band of Ratchet on the cover first. Firstly please draw the outline of the cuts according to the position of Ratchet. The position of cuts should be right upon the ratchets.

draw the outline of cuts

First circle the band for tie down ratchet(Part #21) around the tensioning tube through the cuts on the pocket of the roof cover.

Then put the bands through the reel of the ratchet, and tension the band by ratchet.

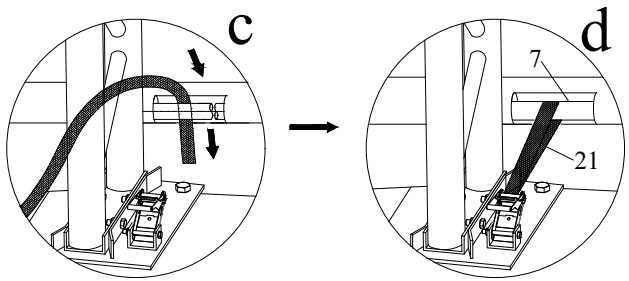

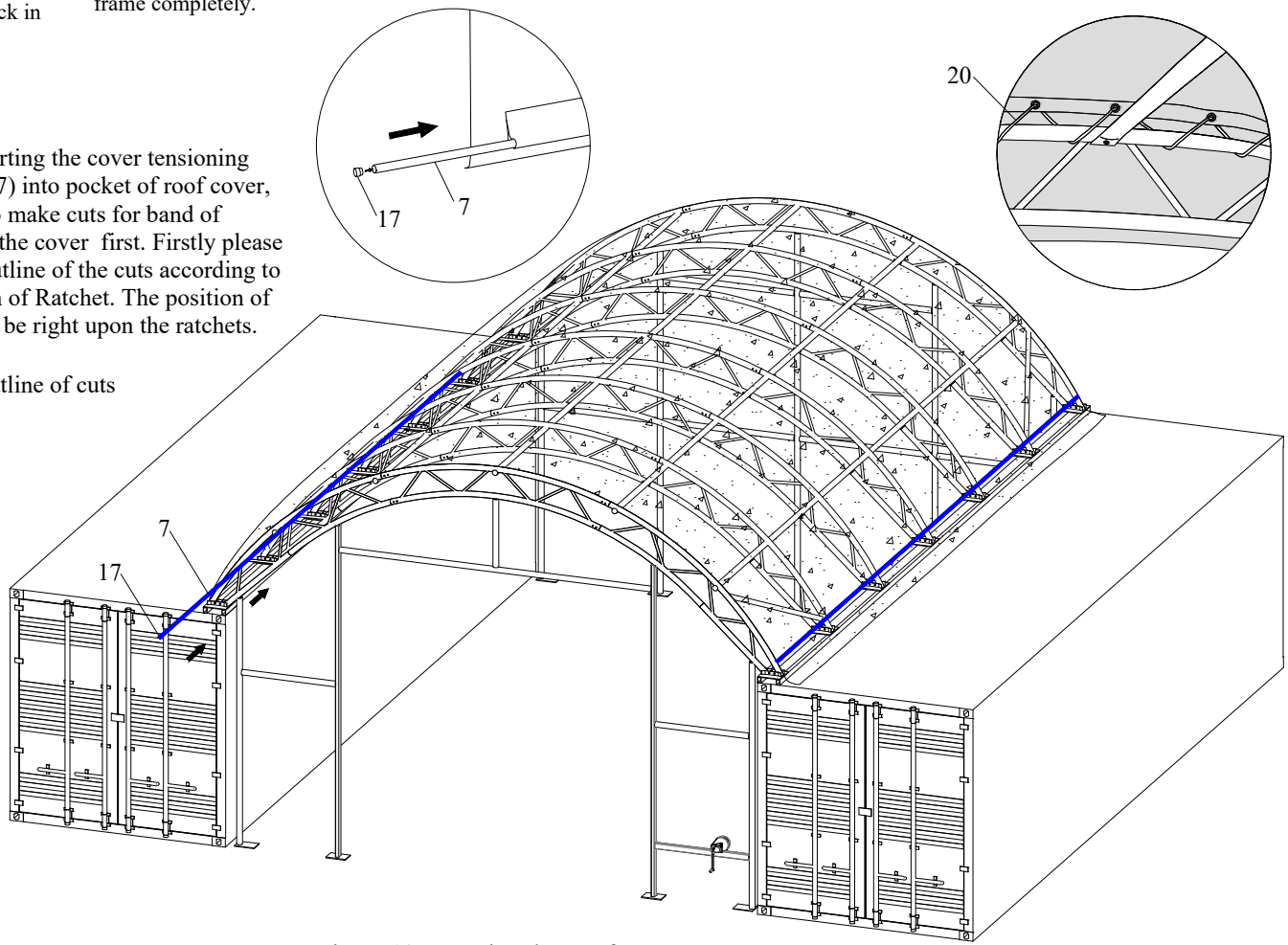

Figure 10 Fastening the Roof Cover

Step #6 --ASSEMBLE FRONT & REAR COVER

Secure the Front and Back Cover to the arch panel by using the ropes provided.
Please make sure to lace the rope through EACH eyelet, don't skip any eyelet. So the stress could be shared evenly on each eyelet and protect the cover.

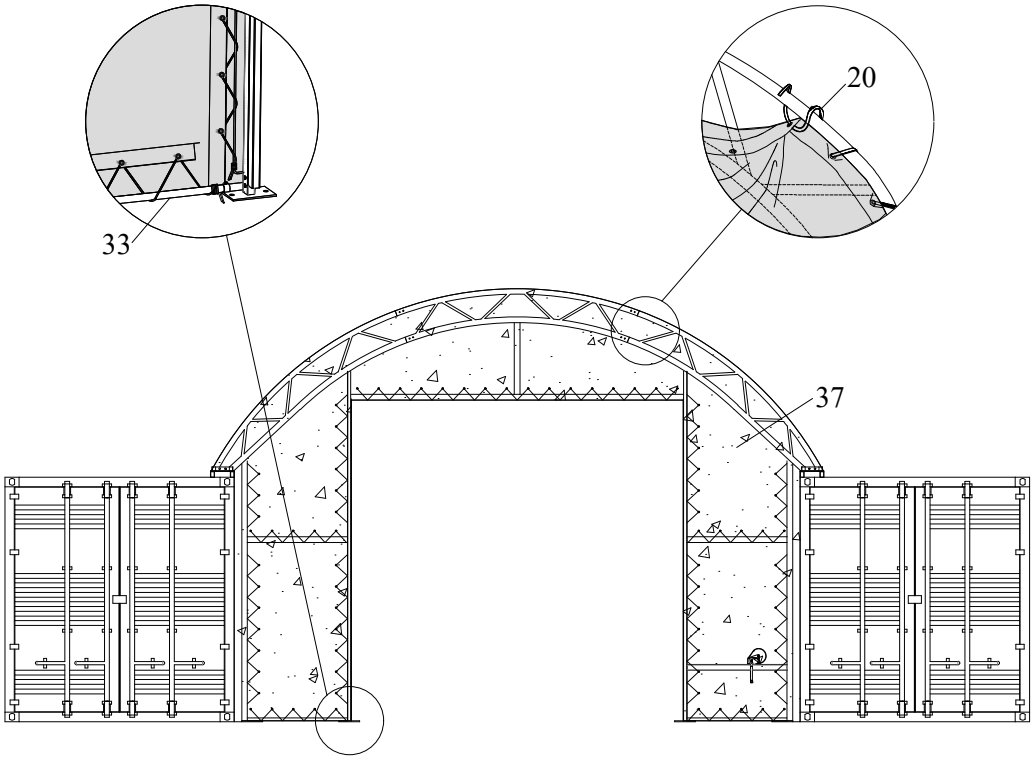

FIGURE 11 Installation of Front Panel Cover

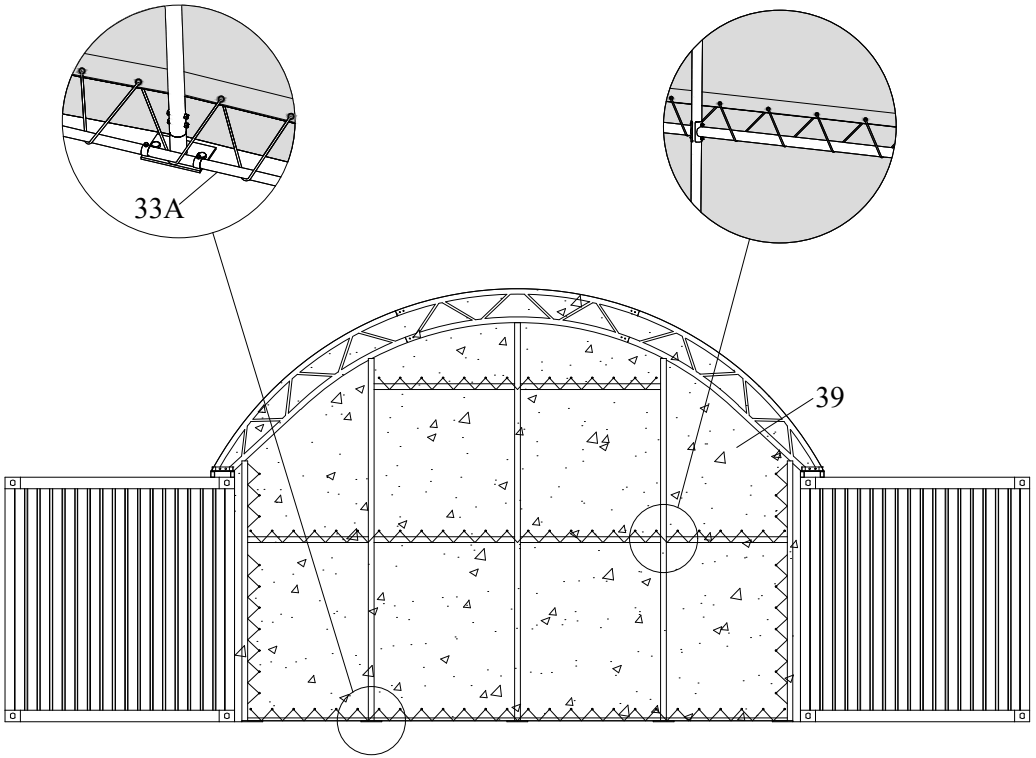

FIGURE 12 Installation of Back Panel Cover

STEP 7-COVER INSTALLATION Continued

1.Lace cover to end arches through eyelets then fully tension.
2.Fully tension tie down evenly on each side.
3. Tension the corners of roof cover by the rachets at 4 corners(part #22).
4. Double check all knots are secure and cover is well tensioned and stretched onto frame.
NOTE: The cover shall always been well tensioned! If there is any damage to the straps and ropes, they should be repaired/replaced ASAP, to prevent any further damage to cover.
NOTE: The Clamp Sets may get loose in the wind after a period of time. Please check and refasten the clamp sets every 1-2 months to make sure the base rail of canopy is secured on the container firmly.

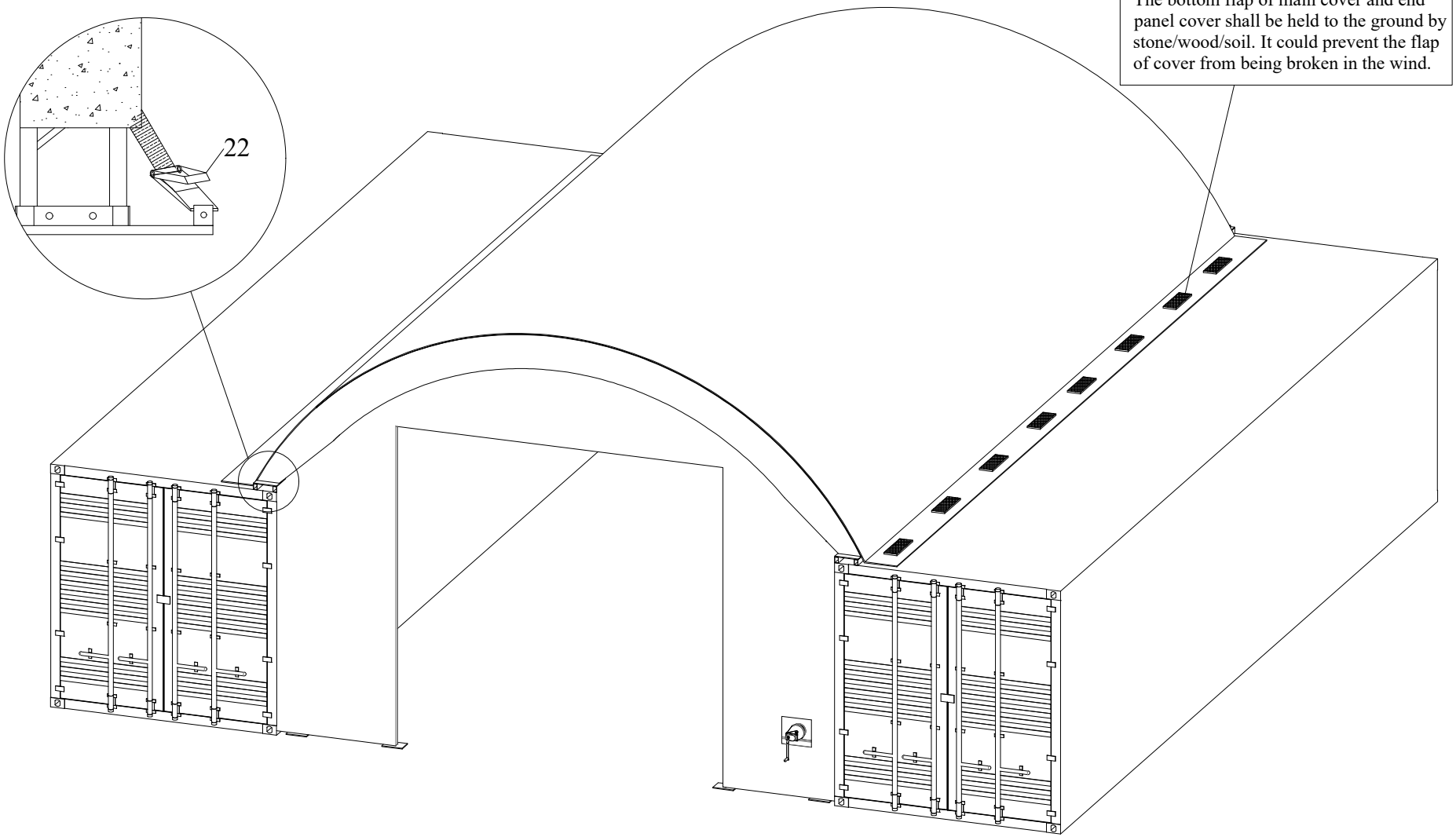

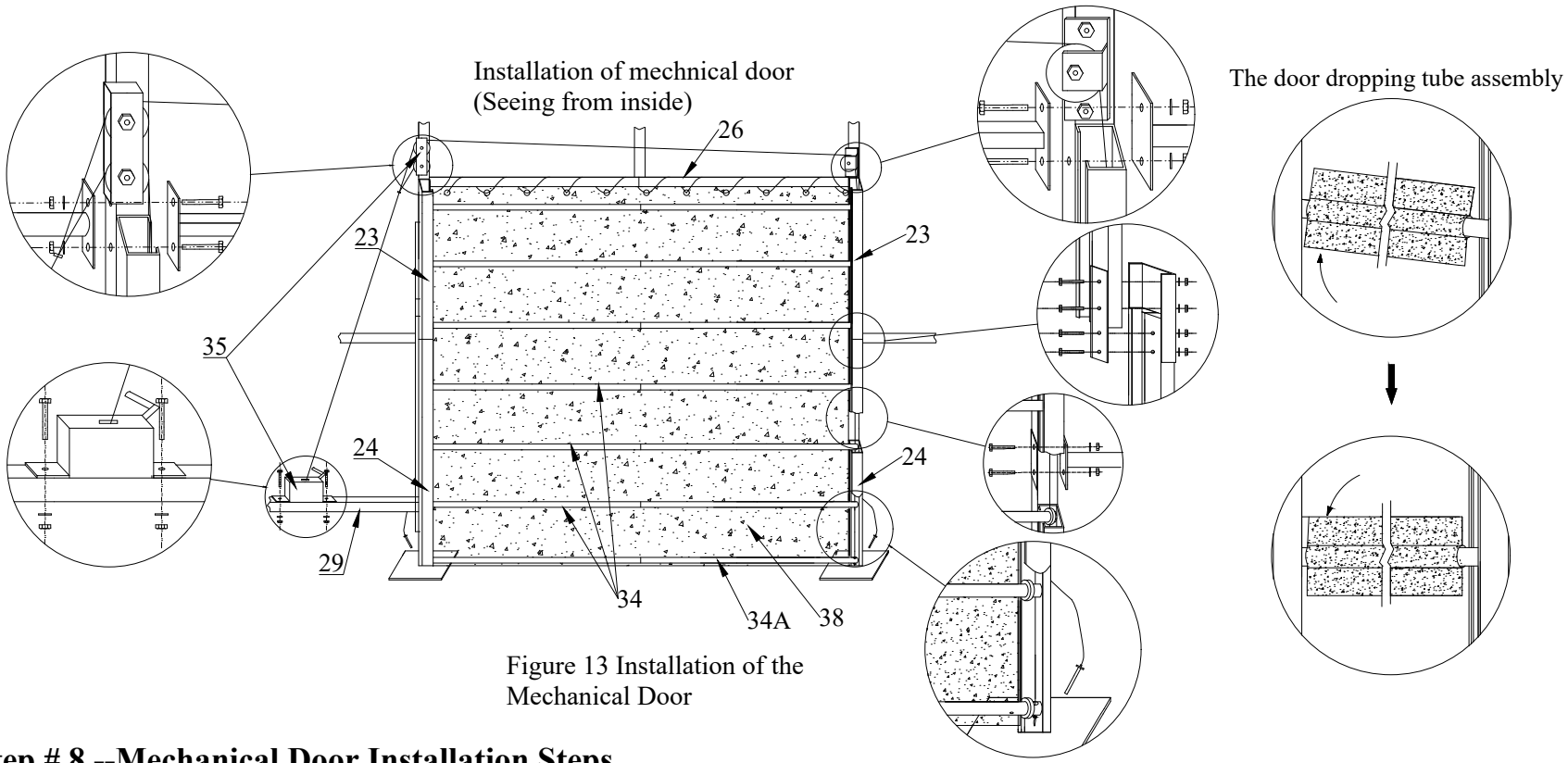

Figure 13 Installation of the Mechanical Door

Step # 8 --Mechanical Door Installation Steps

1. Install Main Door Pulleys (left and right) over the Top of the Door on each side of the Door Beam (Part #26).
2. Next mount the Winch Mechanism to the Front Panel Lower Beam (Part #29).
3. Slide Bottom Door Dropping Tube (Part #34A) into the bottom horizontal fabric pocket on the Door Cover(Part #38). Then slide the six remaining Door Dropping Tubes (Part #34) into the remaining horizontal fabric pockets in the Door Cover.
4. From the bottom of the door tracks(24), gently raise and slide one door dropping tube(34) into the tracks. And then feed the other remaining door dropping tubes(34/34A) into the door tracks.
5. Next install the steel wire that leads from the door winching assembly to the bottom of the door dropping tubes. The Winch Assembly has a long and a short steel cable secured to it. Feed the end of the shorter of the two cables through the lower roller of the double pulley at the top of the door assembly track closest to the Winch Assembly, and then down through the holes in the Bottom Door Dropping Tube (34A) on the left hand side of the door (facing from the inside). When the steel cable goes down though the hole in the Bottom Dropping Tube (34A), tie a knot in the steel wire so that it cannot pass back up through the hole.
6. From the Winch Assembly route leading end of the Longer Steel Cable through the Upper Roller of the double pulley on near door track and then through the Single Roller on the door track farthest from the Winch Assembly. Then down through the Bottom Door Dropping Tube (34A). When the steel cable goes down though the hole in the Bottom Door Dropping Tube (34A), tie a knot in the steel cable. Door can now be opened or closed by operating the Winch Assembly. Raise and lower the door several times to be certain door tube ends are not binding on track. Lubricate if necessary.

The mechanical door vertical tube is equipped with Velcro and fixed withSelf-tapping screw, and the other side of the Velcro is sewn on the cover

