MODEL:204012

W6.1xL12.2xH3.66m

ASSEMBLE MANUAL

Congratulations on your purchase of our instant shelter. This unit is a combination of excellent manufacturing and design. It is comprised of a rigid frame and a durable cover. For easy assembly, we have marked all the parts with codes. With proper installation, use and maintenance, your unit will provide many years of good and suitable service.

READ ALL THE INSTRUCTIONS BEFORE ASSEMBLY !

1. The proper erection and installation of this building requires a high level of care and safety. We recommend the safety regulations be complied with during the installation. It includes but is not limited to:
   - Safety hats, protective eyewear and protective clothing
   - Safety harnesses for all elevated workers
   - Proper ladder, cage, and safety operation
2. Site selection: Choose a solid level location for your building. Do not install the building where the ground could not keep the building steady. Do not install the building where the ground could not bear the weight of the building. Do not install the building in soft grass ground or wetland.
3. Be cautious with the surroundings. Keep work area clean. Do not set up it near snow drifts, in slippery places, or in wet location. The cover of the building will protect against normal falling leaves and light debris, however, large, fast or sharp falling items etc. may cause a puncture or tear in the cover material. So, keep the building away from such harmful things. Be careful with power and heat sources. Don't keep heat sources near the tarpaulin. Don't expose to open flame.
4. Chose a windless day to install the building. It is very difficult to attach the cover in heavy wind.
5. All snow accumulation on the main cover should be removed as soon as possible. Otherwise, when old snow on the roof becomes hard with new snow falling in, it will increase the burden of the roof badly and will damage the roof.
6. Try to keep the building, especially its base, in a dry condition. This will help the building to have a longer life than keeping it in a wet conditions.
7. The user should be responsible for the parts missing or damage occurred during the installation.
8. Don't make alteration of the frame. Don't hang anything besides included parts to the frame. Damages, consequential damages, or injuries caused by improper installation, alteration, improper use, or damages caused by snow, wind, or any acts of nature are owing to the user. The building is not intended for occupancy for any length of time.

ASSEMBLY PROCEDURE

1. Prepare location and place all unit boxes near location sight. Perform an inventory check before beginning, to be certain all components are available for installation.
2. Secure base plates flanges to base surface.
3. Assemble every group of arch.
4. Begin frame assembly with front end arch, first interior arch, purlins, etc.
5. Add to assemble other groups of arches.
6. Install main cover over frame.
7. Install end covers over end panels.

Read all the detailed instructions and notices in the following assembly instructions!

MAINTENANCE AND CARE

1. If some parts or the cover were accidently damaged during the use, contact the local supplier for advises on the repairing method or replacements, so that to prevent from further damage and keep the building in a good condition.
2. When replacing the parts, make certain the whole frame and the parts connected to the replaced parts be well fixed or supported.
3. Same with when attaching the cover, choose a windless day to replace the cover. Begin with making certain all the bolts of the frame and the tensioning equipments be well fixed. When taking off the cover, make sure the related ropes, etc. be taken off, and the cover will not be blocked during the way. Avoid taking off the cover with heavy big power equipments.
4. For the building with mechanical door. Keep the door closed if it is not used for long time. This helps the mechanical door to have a longer life.
5. To enlongate the life of the cover, put small duct tape or foam rubber (provide it by yourself) on the frame that comes to in contact with cover. The tape and foam rubber acts as a cushion to avoid rubbing damage to the cover over years.
6. Periodically(once in half a year or more often), the building should be completely inspected and maintained internally and externally to make certain the building remains properly installed and secured. Including: check all bolts and hardware connectors to be certain they are in place and tightened, the base plates are still fixed firmly, check and adjust the ropes if in need, clean the cover with suitable washing. Allowing dirt and debris to sit on cover over an extended time will damage cover irreparably.

Thanks again for choosing this quality product. The following is the detailed assembly instructions for you starting the assembly.

part Code	Descriptin	Quantity
1	Top roof tube	7
2	Shoulder curving tube	10
2A	Shoulder curving tubes of end walls	4
3	Sidewall tube	14
4	Horizontal purlin tube	30
5L	Base flange in the left corner	2
5R	Base flange in the right corner	2
6	Base flange for the left sidewall	10
	Tie down ratchet	14
7	Base flange of end walls	4
8	Upper vertical tube of end walls	4
9	Lower vertical tube of end walls	4
10	Tensioning tube of roof cover	12+2
11	Tensioning tube of end covers	4
12	Dropping tube for the door	2+2
13	Pole for help opening and closing door	1
14	Digonal supporting tube	4
14A	Tube clip for digonal Supporting tube	8
15	Roof supporting tube	5
15A	Tube clip for roof supporting tube	10
16	Steel peg	50
17	Sexagon screw M10x55mm for arch tube	110
18	Carriage bolt M10x100mm for horizontal purlin tube	40
19	Sexagon screw M10x30mm for clips	26
20	Plastic cap	13+4
21	Roof cover	1
22	Front and back cover	2
23	Strap for ratchets	14
24	Rope for tensioning roof cover	5
25	Rope for end doors	4

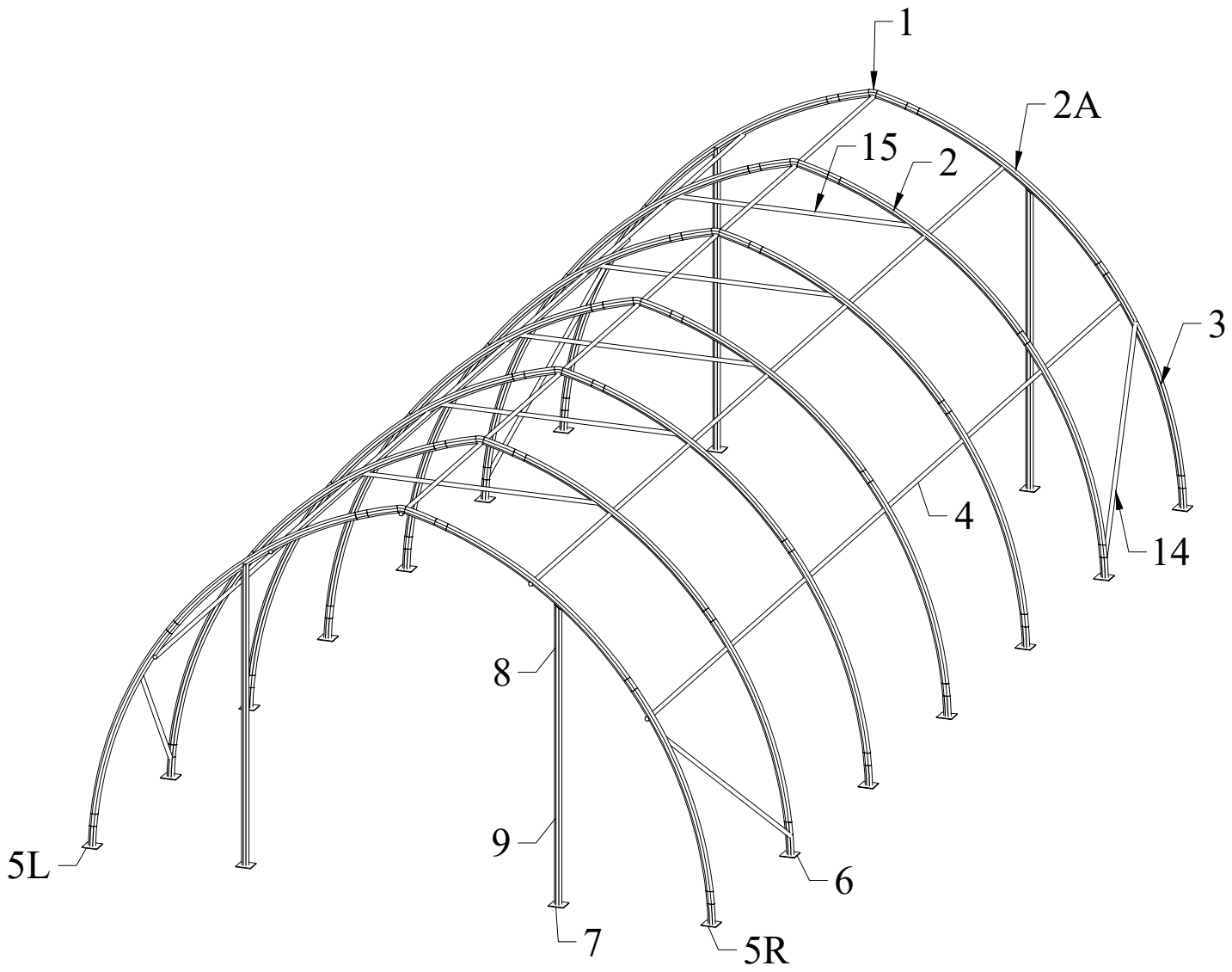

Figure 1 Sketch of Model 204012 Size: W6. 1*L12. 2*H3.66M

Step #1 --SECURING BASE FLANGES

Sit the building boxes in the chosen location. Remove all the components from packaging to ensure all components are present by checking with the Part List.

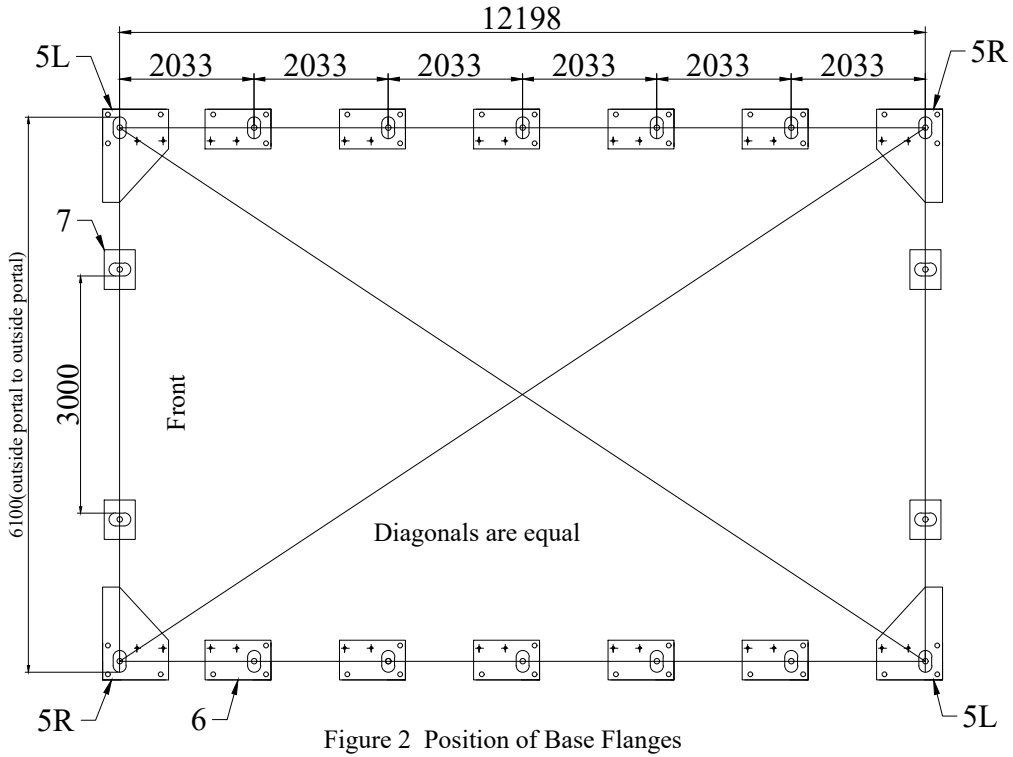

Figure 2 Position of Base Flanges

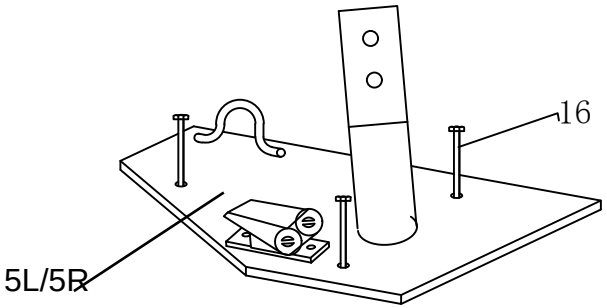

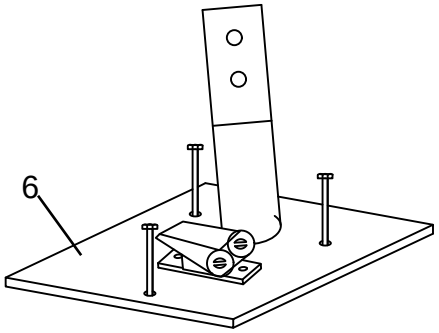

Begin by determining exact location of the four (4) corners of the building. Mark front edge and side-to-side width of assembly on ground. Drive alignment stakes into the ground outside of the markings, and draw alignment strings along both ends and sides of the building to the dimensions shown in Figure 2. The outline of the strings will represent the final location of the base flanges. The initial location of each Corner Base Flanges (5R & 5L) is critical to the alignment and fit of the frame components and cover. Locate the Left Corner Base Flange and Right Corner Base Flange(5R&5L). Secure the base flanges with Stake Pegs (Part #16). Measurements shown in Figure 2 are to the center of the upright sockets on each Base Flange.

The Shelter must be secured to a firm surface that can receive and retain augers and pegs firmly in position. The shelter should be installed on FIRM GROUND, not on SWAMP, SOFT/WET GROUND. The Base Flanges must be secured so they cannot be moved. Arches are tensioned at their base as they insert into the Base Plate sockets.

Step #2 --ARCH ASSEMBLY

Assemble each arch on ground. Each arches consist of:
One curving roof tube (Part #1）
Two roof curving tube (Part #2/ 2A）
Two curving sidewall tube (Part # 3）

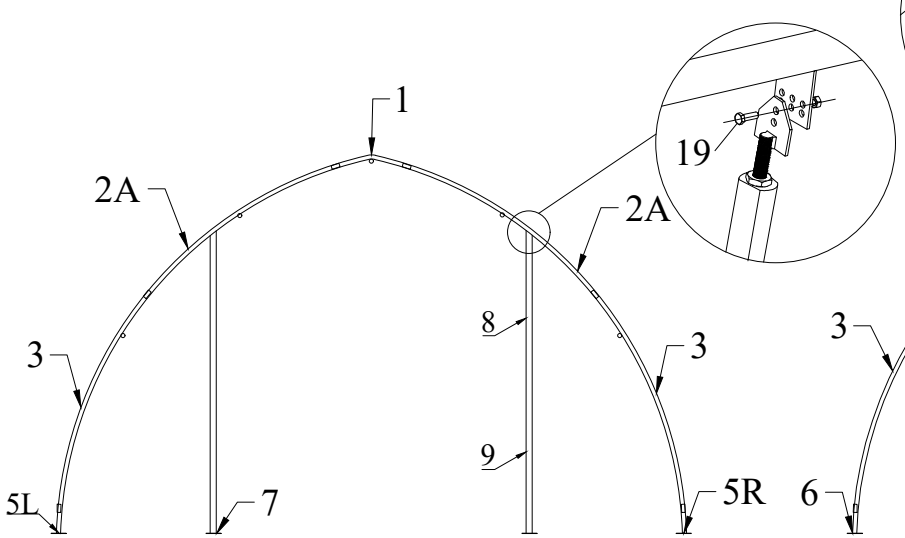

Figure 3 Front And Rear Panel Arch

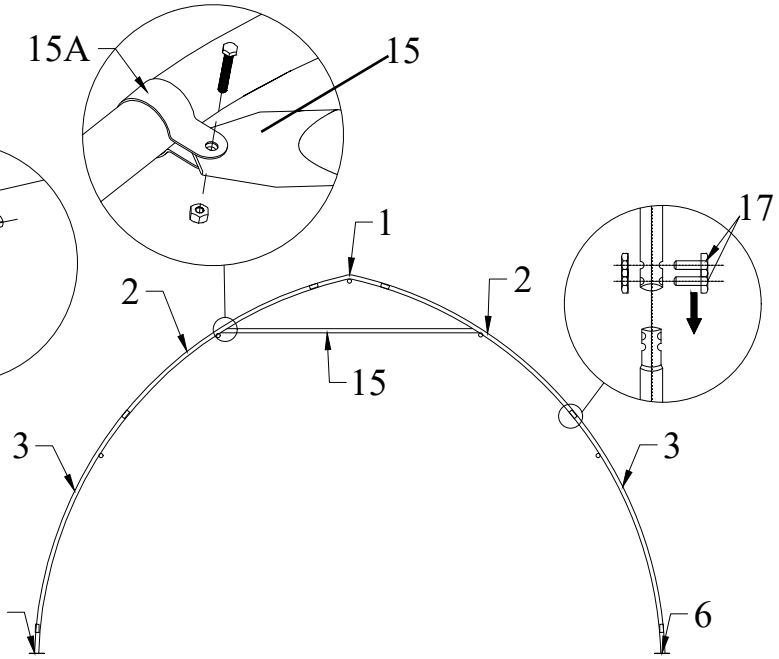

Figure 4 The middle arch

Connect the arches by Using the hexagon bolts with washers and nuts through predrilled holes in frame members. Do not tighten down the nuts completely until frame is fully assembled and set in place.

Step #3 --ERECTING ARCHES

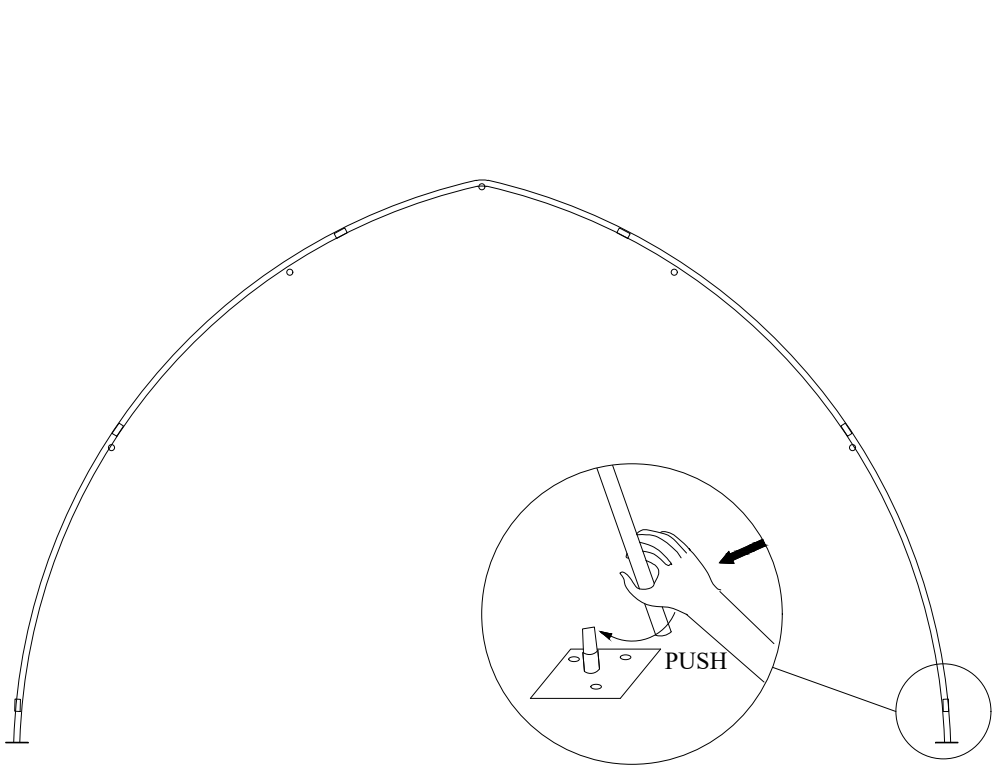

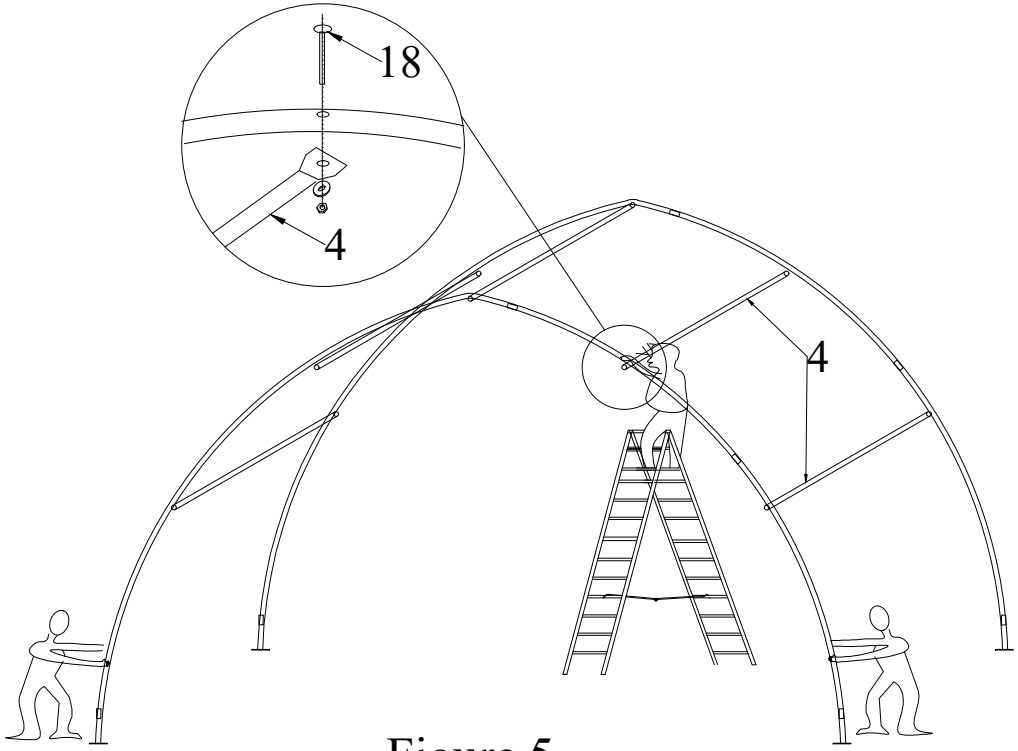

Figure 5

Immediately after putting first interior arch into place, connect Front Arch and Interior arch using Roof Purlin Tubes at top ridge and side shoulder cures of arches. Secure the Roof Purlin tubes into place using carriage bolts and nuts.

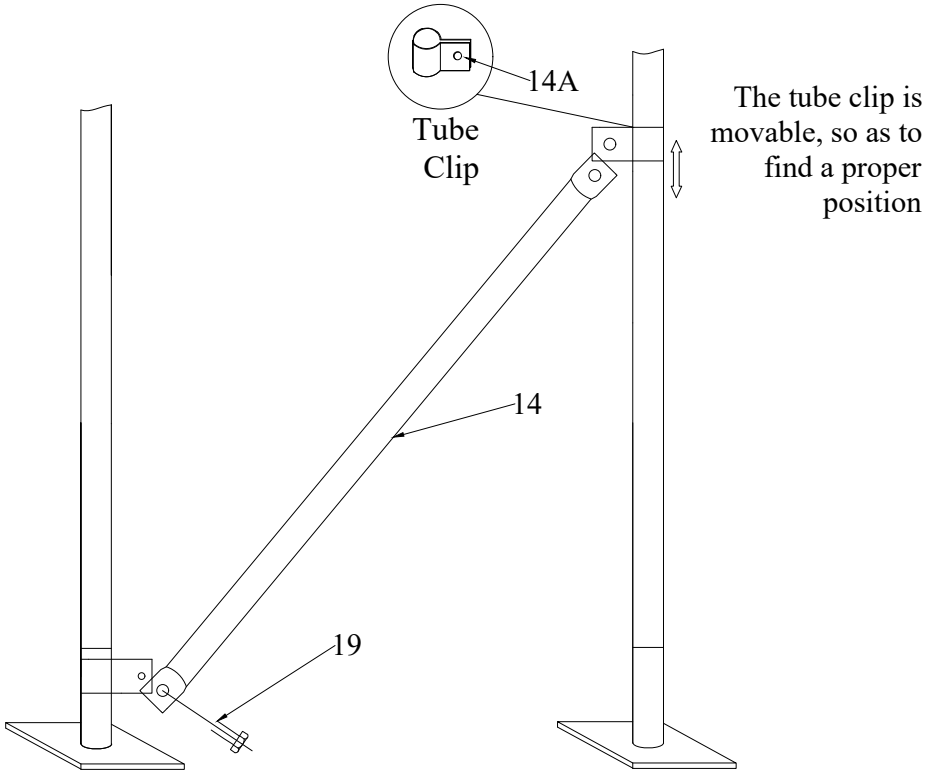

Figure 6: Wind Brace Supports(Part 14)

Nets install the Wind Brace supports(part#14) and Tube Clip(part#14A) that connect the Front Arch to the first Interior Arch. The Wind Braces give the arch assemblies strength as a unit. Use Bolt M10X30 at the end of each Wind Brace Support to secure.

Continue to install other Arches Assemblies in the same manner. Overlap pinched ends of Roof Purlin onto same carriage bolts inside frame assembly. Next check entire frame assembly for square and plumb. Next tighten frame bolts adequately. **DO NOT** over tighten bolts so as to oval or compress frame components.。

STEP 4 - COVER INSTALLATION

1.Insert lower tensioning tube Part #10 into the sleeves of the cover.
2. Push tube to very end of sleeve. Feed tube back into sleeve end(centre the tube in sleeve).
3. Slide the cover over the frame from one side to the other, not end to end.
4.Tension the ends FIRST by pulling and tensioning the ends of the cover using the nylon webbing already threaded through the cover. Tension evenly at both ends and tie off securely.
5. Insert nylon strap over tensioning tube. Feed ends into tie down ratchet. Do not fully tension. Please refer to details a,b,c,d

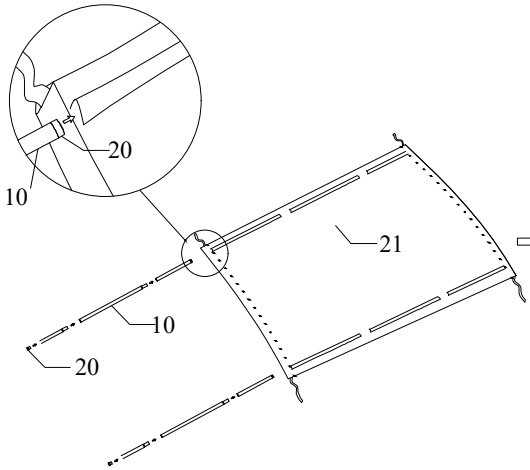



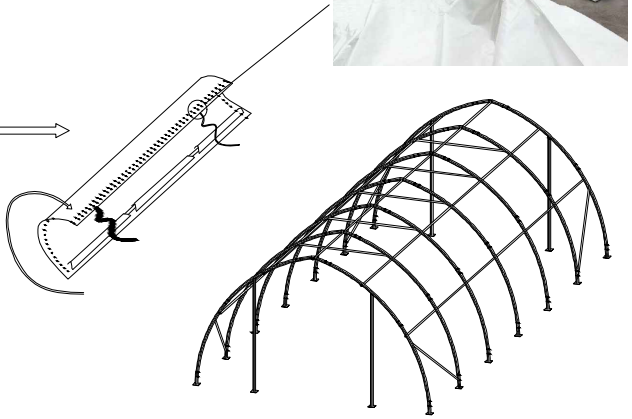

Then make the cuts using forfex along the outlines.

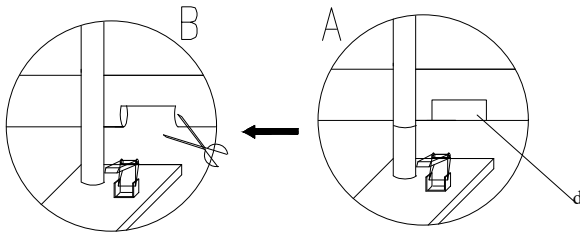

Before inserting the cover tensioning tube(part #10) into pocket of roof cover, you need to make cuts for band of Ratchet on the cover first. Firstly please draw the outline of the cuts according to the position of Ratchet. The position of cuts should be right upon the ratchets.

draw the outline of cuts





First circle the band for tie down ratchet(part#23) around the tensioning tube through the cuts on the pocket of the roof cover.

Then put the bands through the reel of the ratchet, and tension the band by ratchet.

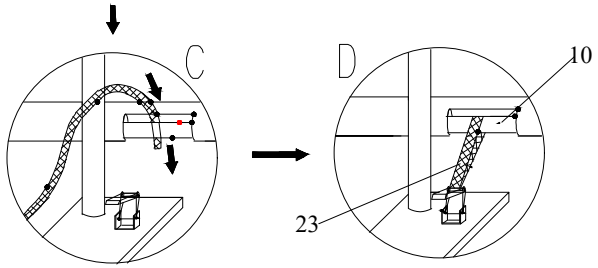

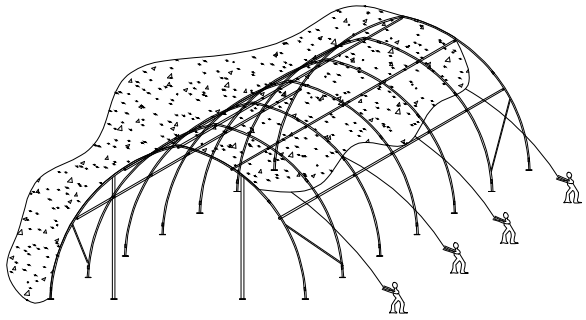

Step #5 --ASSEMBLE FRONT & REAR COVER

Secure the Front and Back Cover to the arch panel by using the ropes provided.

Main Cover Edge Tie Off - Once both Front and Rear Covers are installed, the Roof Cover Edge flap, front and rear, should be tightened and tied off. Begin by pulling the remaining Roof Cover over the Frame arch, so the rope pocket is over the edge of the frame. Tie off the rope that goes through the rope pocket on one side. The rope ties off to the loop that is located on the Base Flange in Corner (5L or 5R). Moving to the other side, begin to pull the rope down.

Hold the rope in hand, and push down at the bottom of the rope with a foot. Pull the rope tight, and tie off to the welded hoop on the Base Flange. As you are pulling the edge rope, it will be necessary to adjust the excess material that will collect along the rope packet. Adjust the material so that it is not bunched up and it does not pull the roof cover to one side or the other. Once the Front is completed, repeat the process on the Rear flap of the Roof Cover.

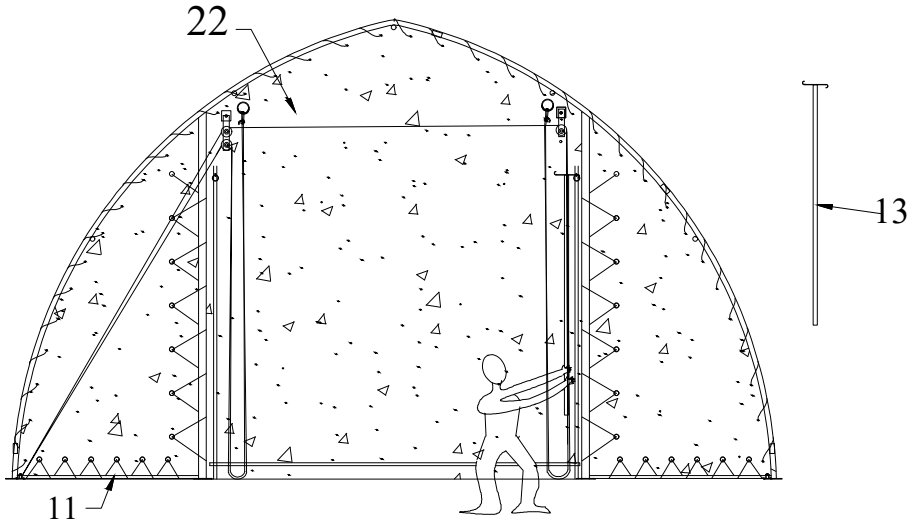

Figure 7
Installation of Front and Back Panel Cover

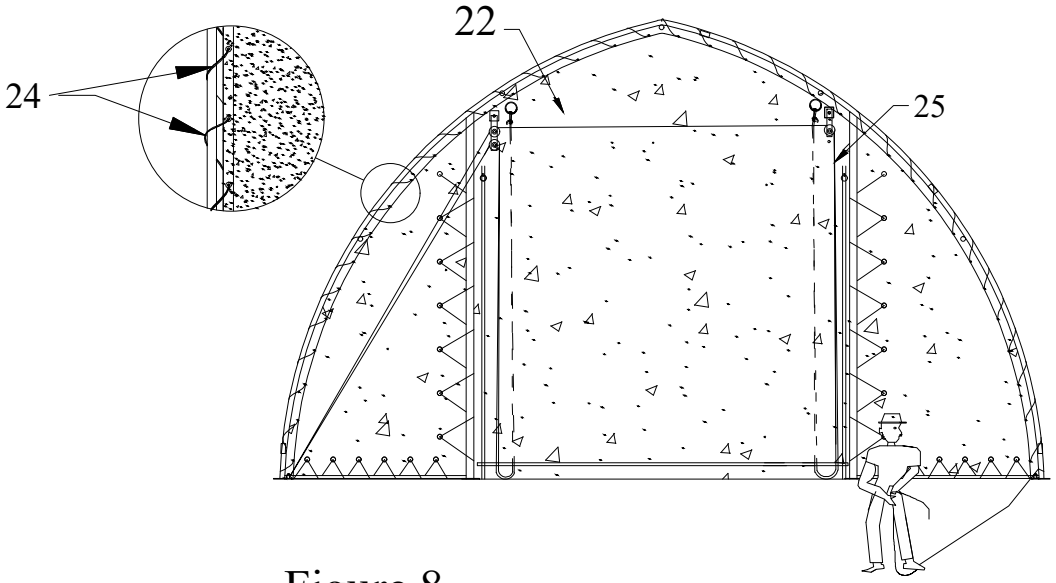

Figure 8
Fastening the two ends of the Roof Cover

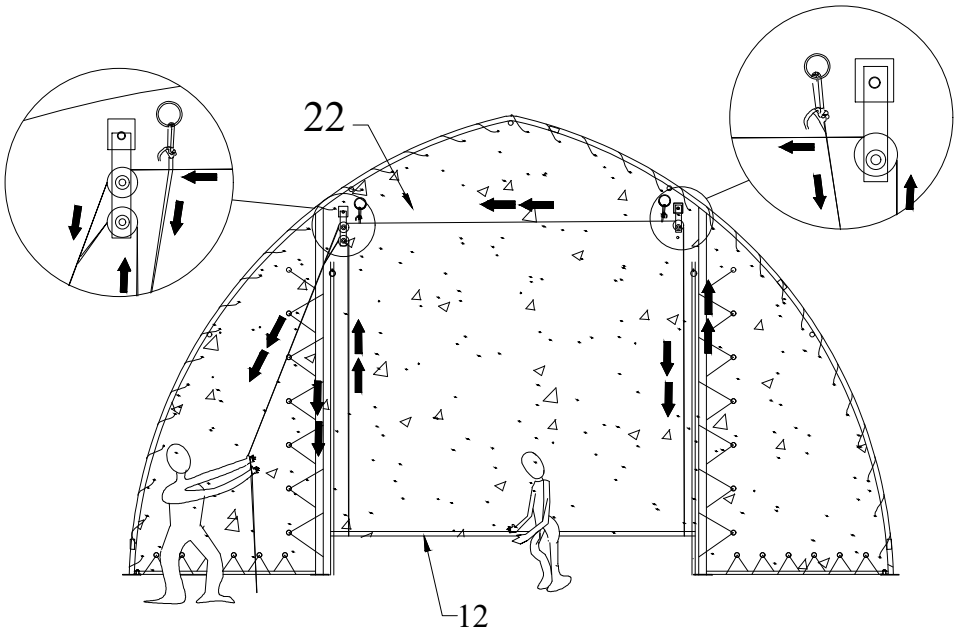



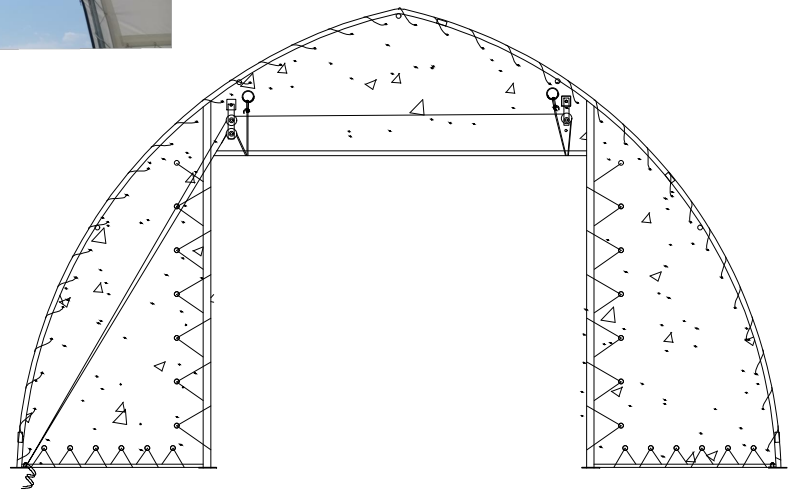

Figure 9 Open Door Cover