24” SEMI AUTOMATIC TIRE CHANGER

MODEL:AGT-TC24

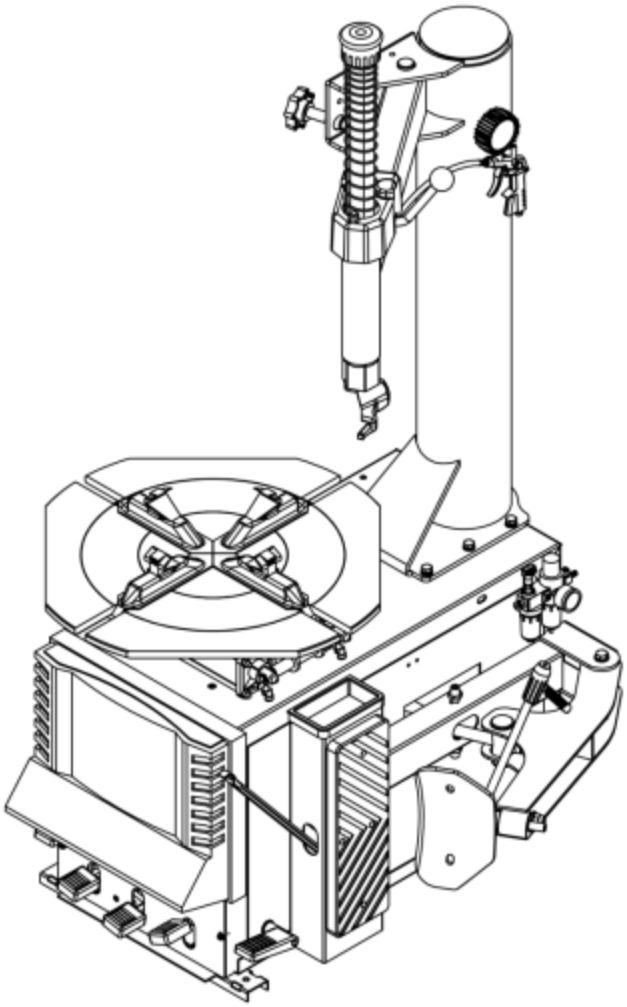



•First, we should confirm the integrity of the product before installing and debugging, to ensure that the product has not been changed.
•The manual is a part of the product, please put it in the place where you can find it at any time.
•In the installation process, if the warning signs are damaged, contact the manufacturer in time to replace the defect.

WARNING - Risk Of Explosion. This Equipment Has Internal Arcing Or Parking Parts Which Should Not Be Exposed To Amenable Vapors.
Do Not Use Below Garage Floor or Grade Level.
ATTENTION - Risque d,explosion. Cet d quipement possdde un arc intdrieur ou des pidces de stationnement qui ne doivent pas dtre exposes aux vapours inflammables.
Ne pas utiliser au-dessous du plancher de garage ou niveau de grade.

GROUNDING INSTRUCTIONS

1 All grounded, cord-connected tools

- In the event of a malfunction or breakdown, grounding provides a path of least resistance for electric current to reduce the risk of electric shock. This tool is equipped with an electric cord having an equipment-grounding conductor and a grounding plug.
- The plug must be plugged into a matching outlet that is properly installed and grounded in accordance with all local codes and ordinances.
- Do not modify the plug provided - if it will not fit the outlet, have the proper outlet installed by a qualified electrician.
- Improper connection of the equipment-grounding conductor can result in a risk of electric shock. The conductor with insulation having an outer surface that is green with or without yellow stripes is the equipment-grounding conductor. If repair or replacement of the electric cord or plug is necessary, do not connect the equipment-grounding conductor to a live terminal.
- Check with a qualified electrician or service personnel if the grounding instructions are not completely understood, or if in doubt as to whether the tool is properly grounded.
- Use only 3-wire extension cords that have 3-prong grounding plugs and 3-pole receptacles that accept the tool's plug.
- Repair or replace damaged or worn cord immediately.

2 Grounded

- Cord-connected tools intended for use on a supply circuit having a nominal rating less than 150 V: This tool is intended for use on a circuit that has an outlet that looks like the one illustrated in Sketch A in Figure 83.1. The tool has a grounding plug that looks like the plug illustrated in Sketch A in Figure 83.1. A temporary adapter, which looks like the adapter illustrated in Sketches B and C, may be used to connect this plug to a 2-pole receptacle as shown in Sketch B if a properly grounded outlet is not available. The temporary adapter should be used only until a properly grounded outlet can be installed by a qualified electrician. The green-colored rigid ear, lug, and the like, extending from the adapter must be connected to a permanent ground such as a properly grounded outlet box.

3 Permanently connected tools

- This tool should be connected to a grounded metal permanent wiring system; or to a system having an equipment-grounding conductor.

Table 83.1
Minimum gage for cord

Ampere Rating		Volts	Total length of cord in feet			
		120V	25ft	50ft	100ft	150ft
		240v	50ft	100ft	200ft	300ft
more than	not more than		AWG			
0	6		18	16	16	14
6	10		18	16	14	12
10	12		16	16	14	12
12	16		14	12	Not Recommended	

* Only the applical parts of the table need to be included for instance,a 120-V product need not include the 240-V heading.

Figure 83.1
Grounding methods

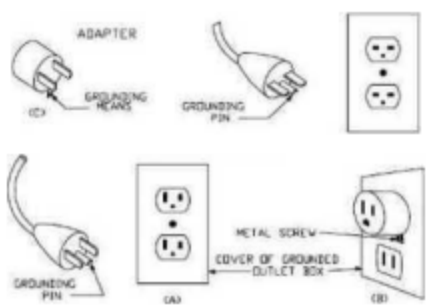

Directory

1 Overview 1
1.1 Important note 1
1.2 Qualified users 1
1.3 Notes 1
1.4 Danger warning signs 2
1.5 Noise standard 3
1.6 Training 3
2 Equipment description 3
2.1 Product introduction 3
2.2 Technical parameters 3
2.3 Transport 3
2.4 Figure and part name 4
3 Installation and commissioning instructions 5
3.1 Pre Installation Preparation 5
3.2 Precautions during installation 7
3.3 Main installation procedure 7
3.4 Commissioning and debugging 9
4 Operation declaration 11
4.1 Operating notes 11
4.2 Disassembly operation process 11
5 Maintenance, storage and scrap 16
5.1 Maintenance 16
5.2 Storage and scrap 19
6 Fault causes and Solutions 19
7 Assistant data 21
7.1 Electrical circuit diagram 21
7.2 Pneumatic diagram 22
7.3 Explosion diagram 23

1 Overview

1.1 Important notes

- ✧ Thank you for your purchase and use of this product. Please read the instruction carefully before installing and operating the tire, so as not to cause unnecessary damage.
- ✧ Without the approval of the company, any user shall not change the parts and structure of the machine without permission.

1.2 Qualified users

- ✧ After professional training of personnel can operate and use the product.
- ✧ Electrical appliances must be operated by the normal electrician.
- ✧ Non-professional and non trained personnel do not come close to the productuse area.

1.3 Notes

- ✧ Before using the product, please carefully read every part of the manual, especially the operation of the safety and mechanical maintenance of the part.
- ✧ Use the tire assembly machine must be operated by professional training personnel.
- ✧ Tire disassembly is forbidden to use in explosive gas.
- ✧ Before the machine is connected, the user must ensure that the use of power and gas supply and mechanical requirements, the circuit system must be operated by professional staff.
- ✧ In the operation process, do not face close to the turntable, so as to avoid dust and other debris hit the operator's eyes. In order to ensure safety, mechanical operation, to be careful, do not touch the inflatable pedal, so as to avoid accidents.
- ✧ To tire inflation operation must be very careful, strictly according to the instructions for operation, if the tire suddenly burst, tire assembly machine design and structure is not to protect the operator's personal safety (or any mechanical in the vicinity of the kind).
- ✧ Operation of the tire changer, necklace, loose clothing, etc., may give the operator to bring personal injury.
- ✧ In the process of removing or installing the operation of the tire, the turntable has always been to ensure that the clockwise rotation; if there is a counter clockwise rotation indicates that the turntable is a failure or operator error.
- ✧ Manufacturers are responsible for the damage caused by the use of other parts of the manufacturer or the damage of the safety device.

- ✧ Periodically check the oil mist, oil, if the oil level is low and need to unscrew the oil cup and then add. Oil mist using models for ISO Hg and viscosity for ISO vg32 oil mist special oil (such as: Esso Fedis k32, 1405, Mobil Vacouline, KLUBER32)
- ✧ If the product is not used for a long time, please user A. disconnect all power supply, B. and lubricate the turntable fixture slide to prevent oxidation.
- ✧ when deciding to scrap equipment, to determine the total energy of all the energy to be cut off, according to the relevant laws and regulations for all non-ferrous metals and non-ferrous metal scrap processing.

1.4 Danger warning signs

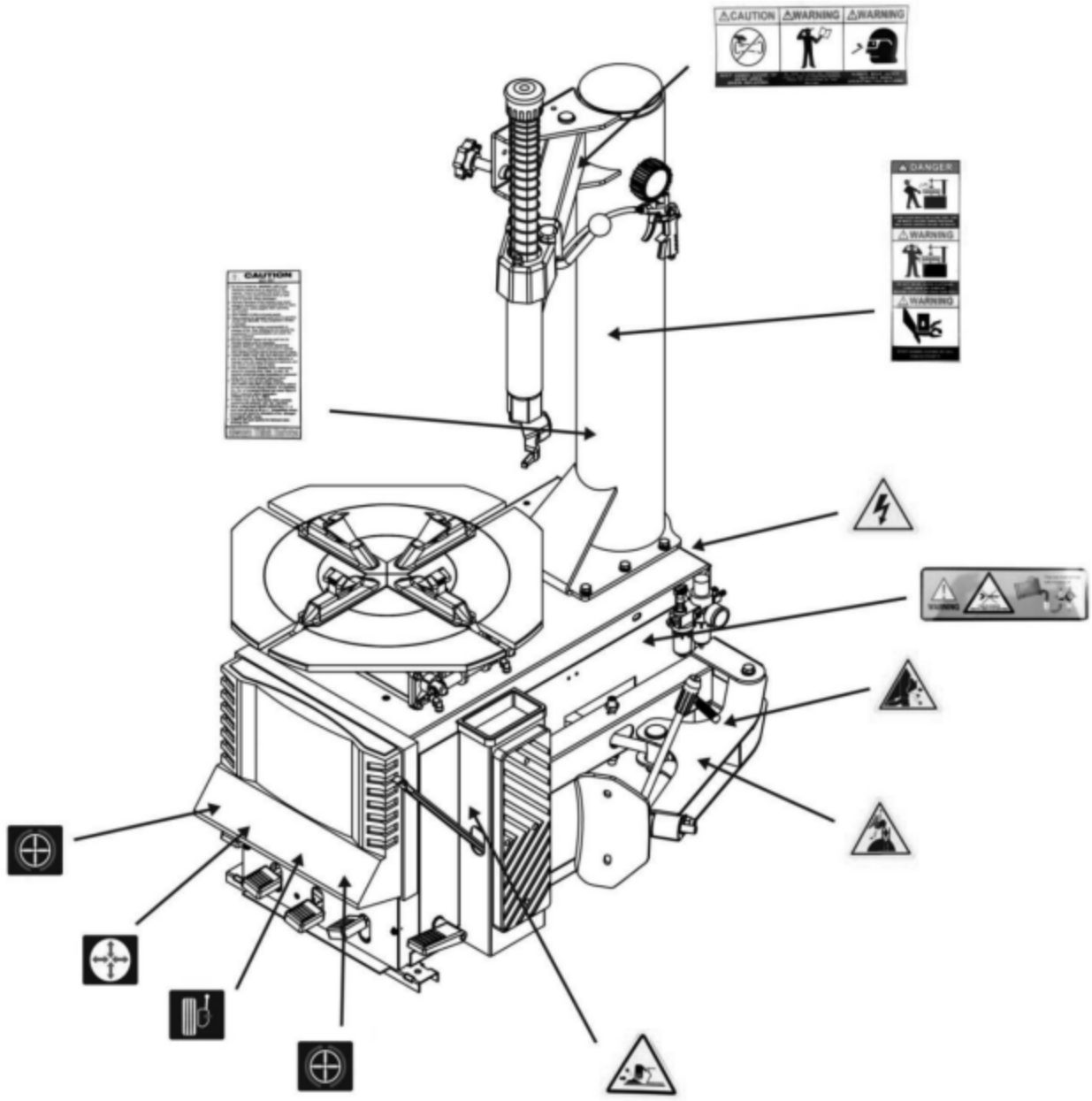

Figure1

1.5 Noise standard

The noise of the tire changer shall be less than 70dB. for your health, and it is recommended that you place a noise meter in your operating area.

1.6 Training

We will be happy to help you in this regard, as we have to train the staff to operate and use the tire assembly machine.

2 Equipment description

2.1 Product introduction

This semi-automatic tire changer is a half automatic, convenient and quick disassembly and installation of wheel size of 10” to 24”, the tire width of 4 1/2"~15 "and the diameter of the tire is 41".

2.2 Technical parameters

Special points	Technical parameters
Outer rim	10"-22"
Inner rim	12"-24"
Maximum tire diameter	41"
Maximum tire width	15"
Pressing force (l45psi)	2500kg
Operating air pressure	90—115psi
Maximum charge pressure	50psi
Power supply voltage	AC 120V 60Hz
Motor power	12.5Amp
Outline dimension	968x992x1800mm
Net weight	190kg
Working state noise	<70dB (A)

2.3 Transport

The machine must be packed in the original factory, and placed in the position specified in the packing box. It must be carried out by a forklift truck or other tool with the corresponding lifting capacity to move the packing machine.

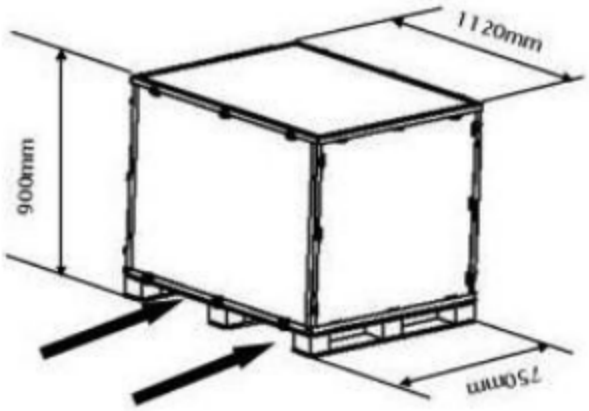

Figure2

2.4 Figure and part name

C: inflatable gun
E: hand wheel
G: clamp
I:changing head
K: locking handle
M:operating arm
N: horizontal pendulum arm
P:column
Q: oil water separate
R:tire pressing device
S: tire pressure rubber
T: crowbar
U: tire-pressing pedal
VI, V2: moving jaws pedal
Y: turntable
Z:reversing pedal of table!

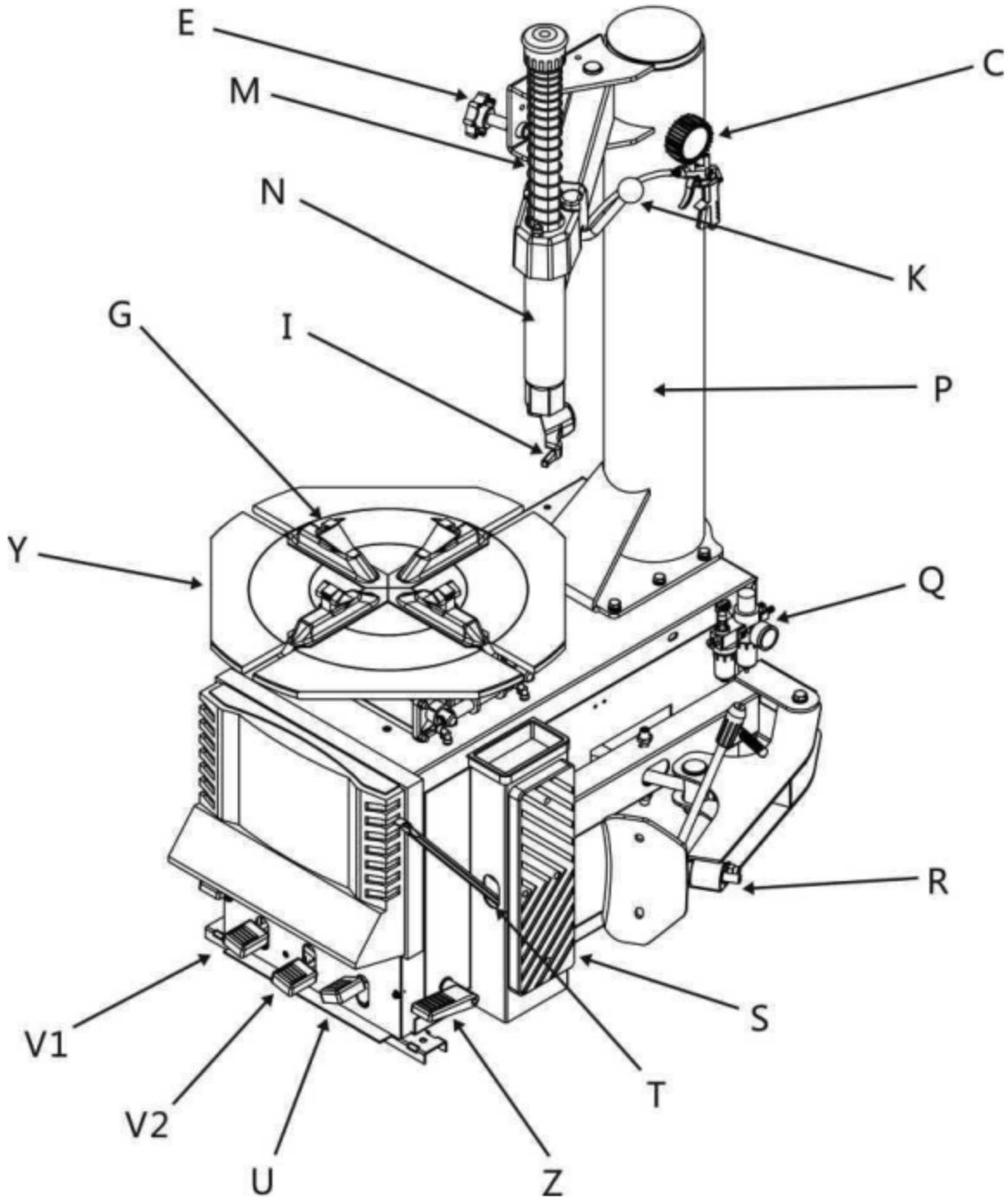

Figure3

3 Installation and commissioning instructions

3.1 Installation Preparation

3.1.1 Installation location

- ✧ The installation location of the machine must be in line with the standard of the installation work.
- ✧ The tire changer need to be installed in the main power supply and compressed air system.
- ✧ Equipment installation location should be at least up to the standard shown in Figure 4 and 4-a, which can ensure the normal operation and the machine parts are not subject to any restrictions.The tire changer is forbidden to use in explosive gas.

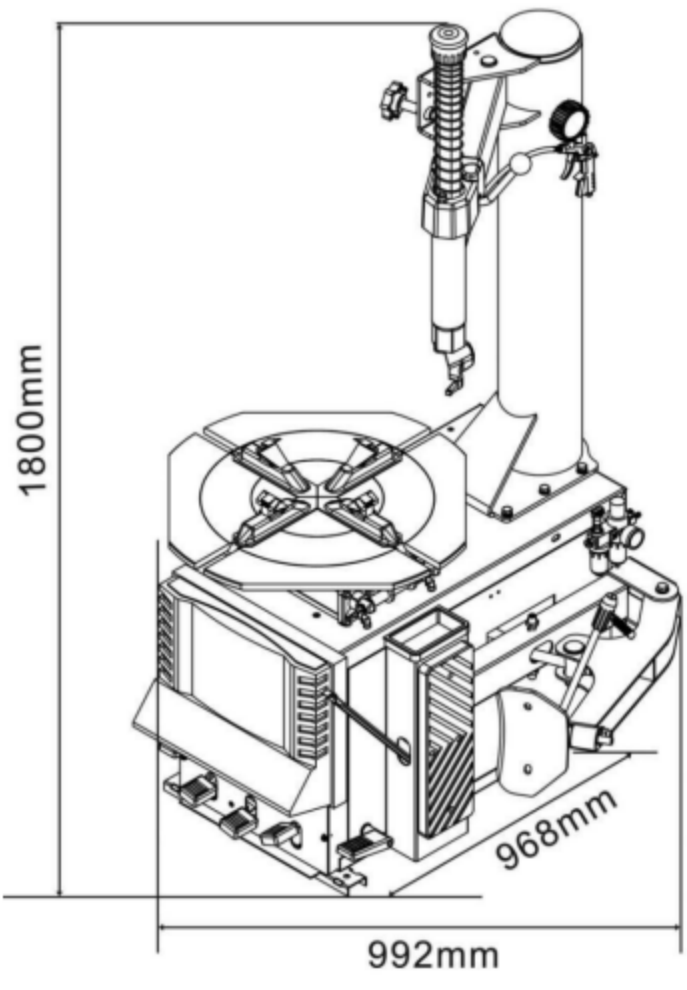

Figure4

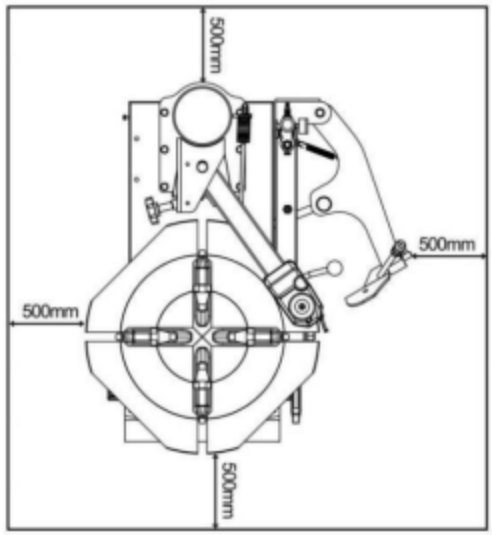

Figure 4-a

3.1.2 Installation equipment and tools

Installation equipment and tools

3.1.3 Inspection products

After receiving the product, please check the machine packaging,transport and wet damage phenomenon, if shipping damage or soaked by rain, please don't open the package, please contact the seller. Such as damage has been found in the packaging but still unpacked, missing pieces or some parts can not be used and accidental injury etc.,I will not bear any responsibility.

3.1.4 Unpacking

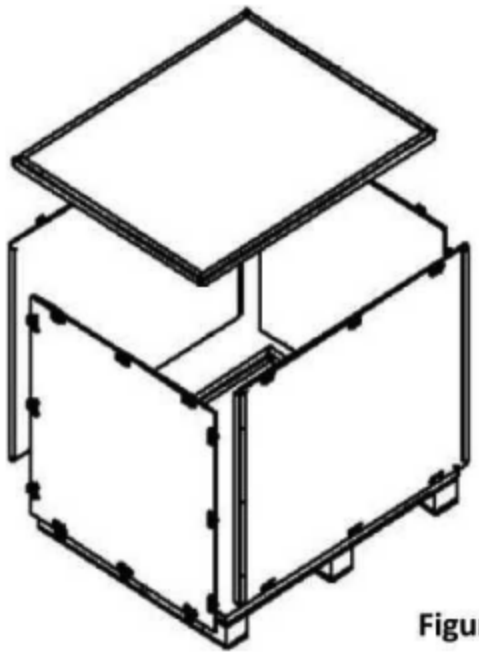

Figure 5

- ✧ Check the packaging damage and the rain and other damage phenomenon, using the tool unpack the packing as shown in Figure 5, please dispose of packaging box, lest the environmental pollution.
- ✧ Check the condition of the machine, in accordance with the packing list to check if there is any damage or lost, once found contact the dealer and manufacture immediately. If you find that the leakage but still installed, we will not assume any responsibility. If you have any questions, please do not use the machine, the supplier contact.

3.2 Precautions during installation

- ✧ All bolts must be tightened.
- ✧ Power cord, no broken skin, no broken pipe, and other damage.

3.3 Main installation procedure

3.3.1 Standard configuration installation

- ✧ The first step: unscrew wooden pallet fixing screws, tire changer placed at the installation site, (installation site must conform to the requirements.
- ✧ The second step: as shown in figure 6-a, unscrewing the 6 bolts from the box, the column is installed in the machine box on the specified position, tighten the 6 bolts.
- ✧ The third step: as shown in figure 6-b, after the installation of the column, such as

the degree of tightness of the arm is not suitable, customers can adjust the tightness of the elastic nut (according to the customer's own work effect, can not adjust)

- ✧ The fourth step: as shown in the figure 6-c, ensure the machine source and compressed air system is connected. * Note: prior to connect all the energy, ensure the machine installation conditions conform to a uniform requirement.
- ✧ The fifth step: as shown in Figure 6-d, stepping on the pedal which controls the cylinder of pressing tire, the piston rod of the cylinder can be inserted.
- ✧ The sixth step: as shown in figure 6-e, I the spade device is installed in the bearing, the screw is inserted into the hole, do not use wrench to tighten the nut. II make the cylinder piston rod go through the hole in the rotating pin, screw the nut, but do not tighten.III The spring is hung at the point of the box body and the pressing-tire spade.
- ✧ The seventh step: as shown in figure 6-g, 6-f, tighten the screw on the pressing-tire assembly device and the screw on the piston rod of pressing tire cylinder.

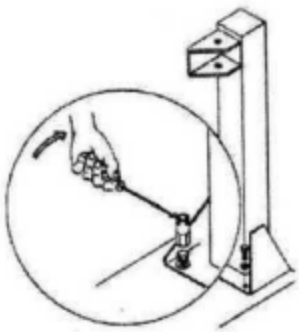

Figure 6-a

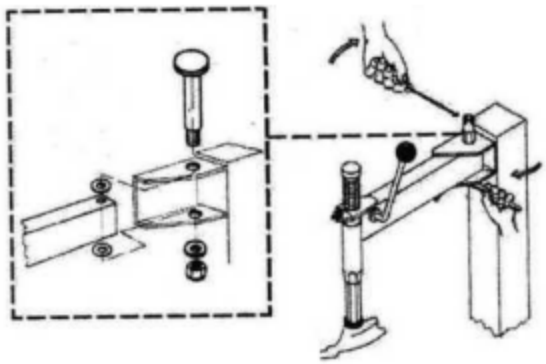

Figure 6-b

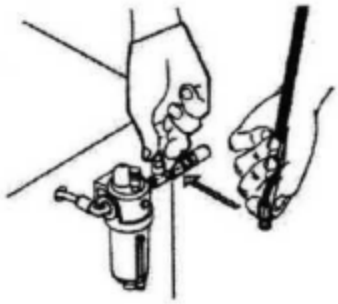

Figure 6-c

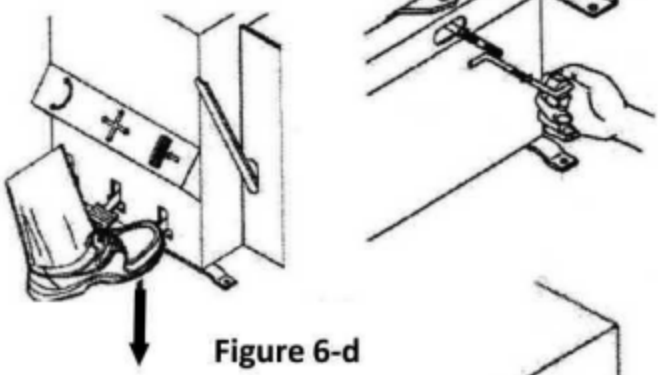

Figure 6-d

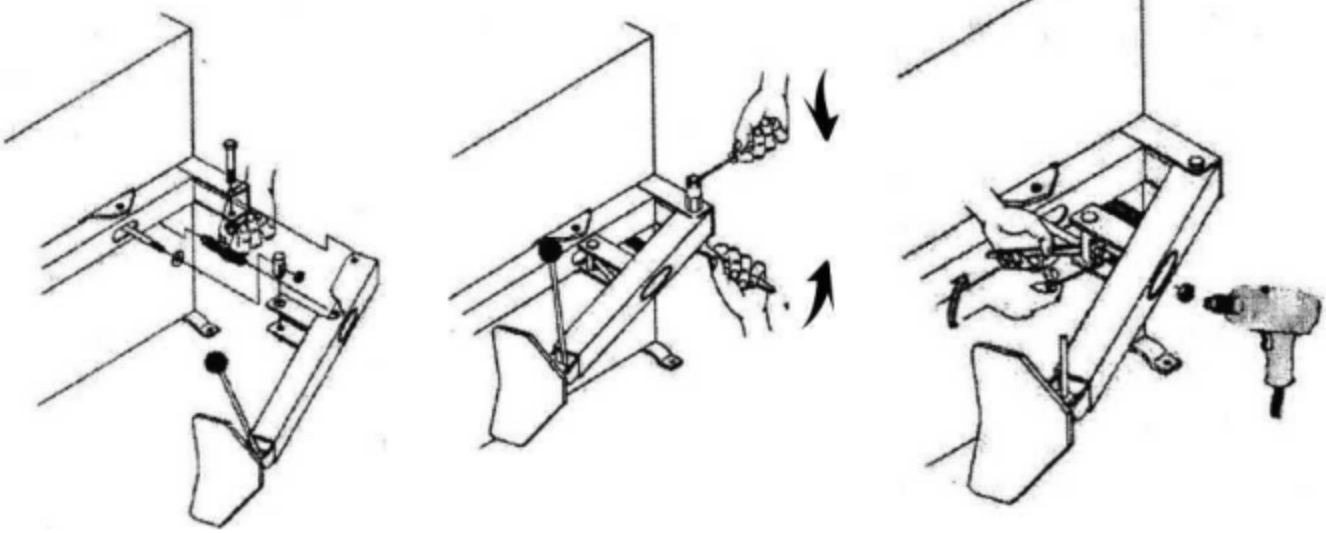

3.3.2 Check the project table after installation

No.	Inspection item	Yes	No	Remarks
1	Whether the power supply voltage is consistent with the requirements of the			
2	Whether the components are installed			
3	Whether the bolts, screws, nuts are tightened			

Note: Please fill in the inspection item list after the installation is finished.

3.4 Commissioning and debugging

Commissioning

- ✧ After the installation of the machine but before the connection with the power supply, it is necessary to determine the user's power supply, the gas source and the requirements of the machine is consistent.
- ✧ The machine is connected to the circuit, the circuit must be fitted with a fuse that is in line with the operating rules. The automatic circuit breaker of 25A is required to be operated by professional personnel. The power plug of the tire changer is provided with the customer.
- ✧ As shown in Figure 7, the compressed air system is connected to the machine by a pipe joint (Q) on the side of the tank.

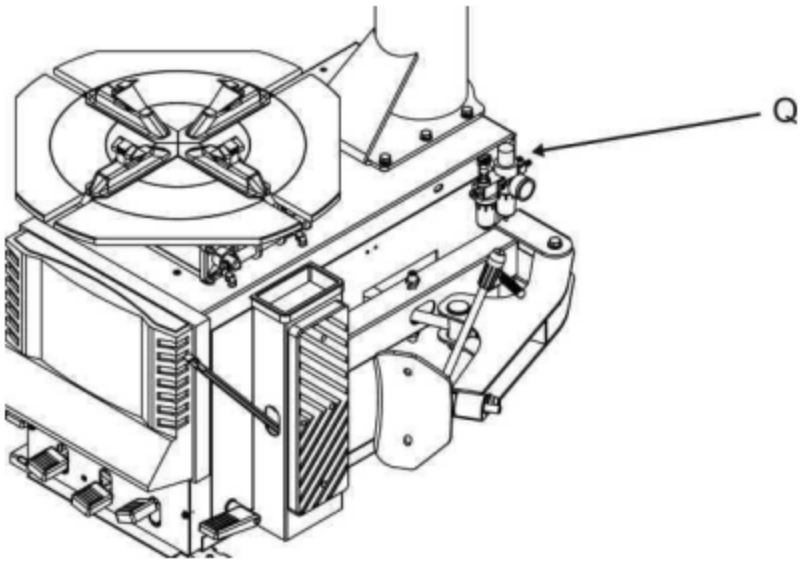

Figure 7

Debugging

Step 1: turn on the power and gas supply, step the pedal (Z), turntable (Y) should be clockwise. Raise the pedal (Z), the turntable (Y) should be anti-clockwise rotation. (If the turntable is opposite to the specified rotation direction, the position of the two lines in the three-phase plug should exchange position.)
step 2(U), start the pressing-tire spade device (R); when the pedal is released, the pressing-tire spade device (R) to return to the original position.
step 3pedal (VI), open the 4 clamps(G); step pedal (V2), the 4 clamps (G) will be closed.

Work head adjustment

- Work head position in factory is adjusted in accordance with the size of 14" wheels, due to the size, shape and structure are different, so you need to adjust the position of the working head according to the actual wheel size.
- The specific operation as follows: as shown in the figure 8-a. Using comer in hand with an open-ended wrench to release the No. 1,2,3 parts, screwing the hand wheel (E) on the left side of the column, front of the mounting head (I) should be adjusted within the range as shown in figure 8-b. Adjusting the end of the mounting head (I) to the working position according to the rim position (because everyone has a different way of working, so there is no specific standard).
- Fixed (I) working position, using tools tighten the screw of No.3 and No.2 in order, ensure that when locking screw, the working position of working head (I) has not changed, using tools to tighten the No.I bolts in figure 8-a (Note: the above bolts and the top screw must be locked tightly, can not be loosened).
- Pull the locking handle (K), loosen manipulator (M), move up the mounting head (I) to the range shown in the figure 8, then pull the locking handle (K), lock manipulator (M), at the mounting, head (I) position should be is fixed in the position shown in figure 8 and figure 8-b.

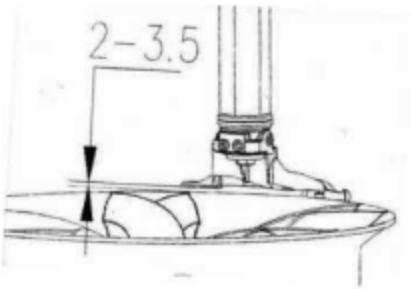

Figure 8

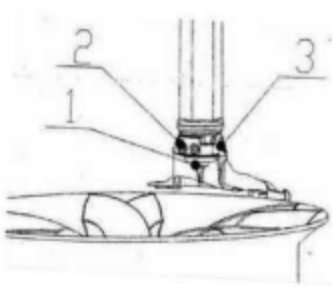

Figure 8-a

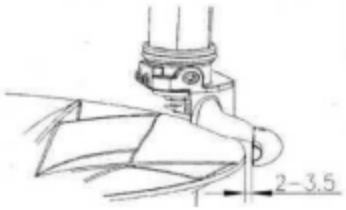

4 Operation declaration

4.1 Operating notes

- ✧ Check the connection of air pipe is in place, ensure that no air leakage, ensure the operation space to meet the requirements, then start work.
- ✧ Before any operation, the gas in the tire is needed to be released , and the balance block of the tire balancing device is removed.

4.2 Disassembly operation process

4.2.1 pressing tire

- ✧ Check whether the gas has been released over. If not, please release the gas completely, close the clamps on the turntable, and straighten the turntable in order to avoid the damage to the rim in the process of pressing tire.
- ✧ As shown in Figure 9,10, the tire need to be leaned on the rubber mat which is on the right side of the semi automatic tire changer (S), (Note: it must be very careful to carry out the pressing operation. When the pressure plate is operated, the pressure relief arm will swing rapidly and powerfully, and any object in the range of the pressure arm is dangerous.

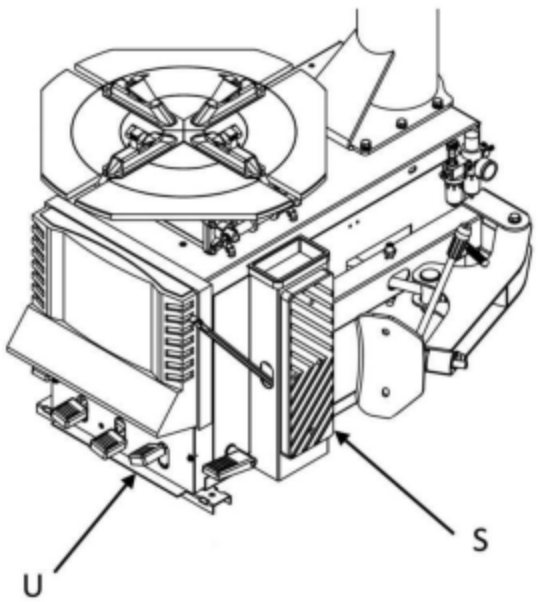

Figure 9

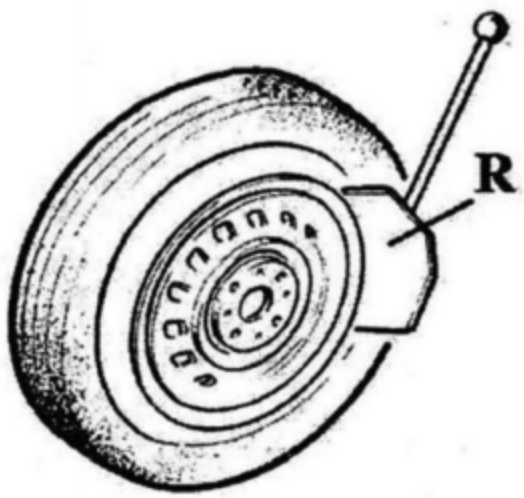

Figure 10

- ✧ As shown in Figure 10, make the pressing-tire spade R close to the rim edge for

about 2-3cm, (Note: the pressing-tire spade is to be placed on the wheel rather than the rim).

✧ As shown in Figure 9, step on the pedal (U) and start the tire pressing device. When the tire pressure shovel completed operation or the wheel edge goes away from the rim, release the pedal. Gently rotating the tire, repeat the same operation to the other place of the tire.

4.2.2 Tire disassembly

✧ After pressing tire, the rim edge should be coated with special lubricating fluid, make the position of the pedal (VI) be in parallel with (V2), the tire should be fixed on the clamp (G) , make the clamp lock the rim tightly by steeping on the pedal (V2) (Note: make sure that the rim is locked tightly by the clamps).

✧ Lower operating arm (M), until the disassembly head (I) is supported on the rim of the rim, lock it with the lock handle (K). In this process, as shown in figure 8-b, figure 8, the operating arm (M) is locked in a fixed position in the vertical direction, and the head (I) is moved to the top of the rim of the 2-3.5mm. Once the operating arm is locked in the vertical direction, As shown in Figure 14, you must use the left hand wheel (E) which is on the horizontal swing arm (N) to remove the rim of the head (I) (about 2-3.5mm).

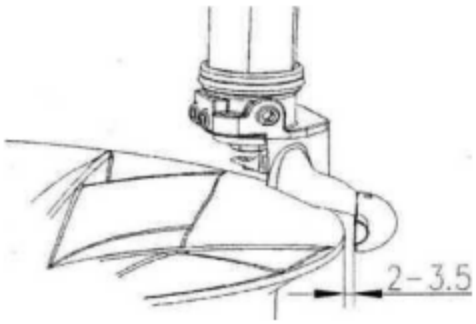

Figure 8-b

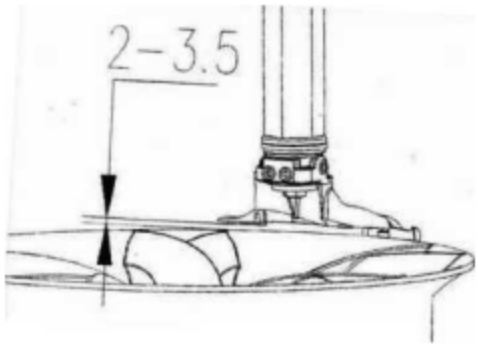

Figure 8

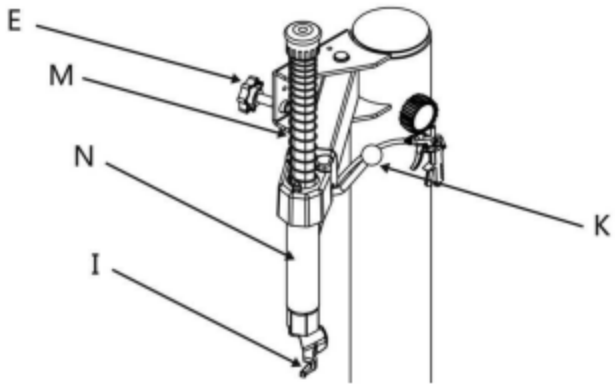

Figure 14

✧ As shown in Figure 11, insert into the crowbar (T) between the tire edge and the mounting head (I), make the tire edge hang on the disassembly head (I) outward, keep the crowbar (T) in this position, slam the pedal (Z) to make turntable (Y) rotates

clockwise, until the tire is completely removed from the wheel rim by the crowbar (T).(when the rotating wheel is running, the other parts of the body should be as far away as the moving parts, so as not to be injured).

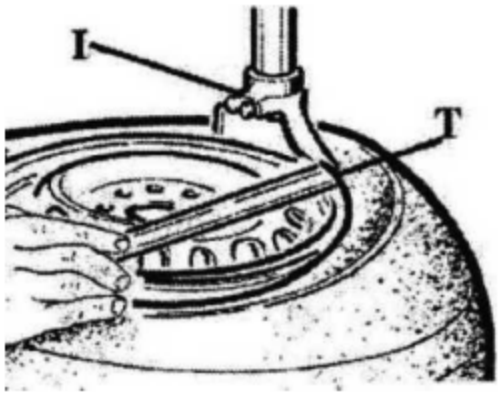

Figure 11

4.2.3 Tire mounting

- ✧ The special lubricant is coated in the rim, it can prevent the rim flange is damaged, and can make the installation more convenient. Move the tire, make the rim flange go through bottom which in the front of the mounting head (I), along the mounting head (I), make the rim flange be on the top which at the rear of the mounting head (I).
- ✧ As shown in Figure 13, pressing the flange into the groove of rim with hand, step pedal (Z), make the turntable rotates clockwise, until the rim flange falls completely into the rim. (hands and the other parts of the body are to be as far away as possible from the operating arm (M), in order to avoid accidents.
- ✧ Note: in the process of removing or installing the tire, the turntable has always been to maintain the clockwise rotation; if the counter clockwise rotation indicates that the turntable is a fault or an operator error.



Figure 12

4.2.4 Air inflation

- ✧ Note: the pneumatic operation of the tire must be very carefully, strictly according to the following instructions for operation, if the tire suddenly burst,
- ✧ the design and structure of semi-auto tire changer is not able to protect the operator's personal safety (or anything in the vicinity of the machine. In the process of charging, as far as possible, make hands and the body be far away from the tire), recommend using professional inflatable tools (inflatable cage or other protective device for the tire inflation).
- ✧ The burst of the tire may cause severe damage to the operator or even death.
- ✧ Before charging, check whether the tire was damaged.
- ✧ Remove the tire from the turntable, if you need a greater inflation pressure, you can place the tire into a special protective cage to continue to inflate it, use the pneumatic gun provided by the tire changer to inflate, according to the following steps to complete: first, connect the pneumatic nozzle to the tire valve (as shown in Figure 13), second, confirm whether the tire diameter is consistent with the diameter of the rim, third, release the trigger of the gas gun and control the pressure of the pressure gauge in the process until the tire is fit to the rim, at last, continue to inflate, and often check the inflation gauge pressure until the pressure reaches the specified value of the tire. (Note: use the inflated gun to inflate the tire, regularly check the pressure of the inflation gauge).

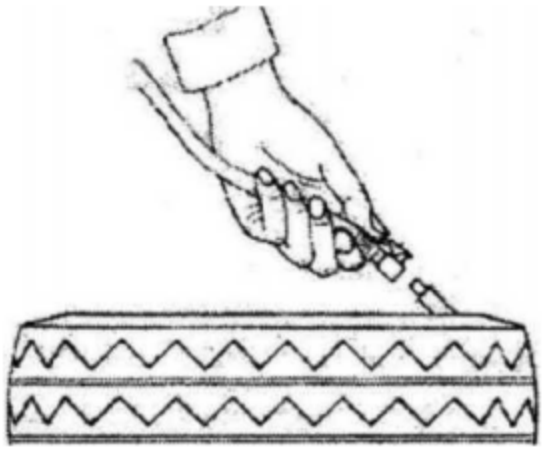

Figure 13

5 Maintenance, storage and scrap

5.1 Maintenance

5.1.1 Maintenance

- ✧ Prohibit unauthorized personnel for maintenance operation. To extend the service life of the tire changer, maintenance should be performed according to the requirements of the manual. If the machine is not maintained regularly, the operation and reliability can not be guaranteed, and even cause danger to the operator or the people in the vicinity of the machine. Before any maintenance operation, circuit and gas supply device must be disconnected ,tum off the switch. In order to release the pressure of the air from the line, it is necessary to press the pedal 3-4 times.
- ✧ It must be professional staff using the original spare parts do the timely replacement of damaged parts. The safety device (safety valve, control valve) of the unauthorized removal or replacement is a violation of state regulations on work safety. (Note: the manufacturer is not responsible for damage caused by the parts of other manufacturer and the damage caused by the disassembling of the safety device).

5.1.2 Tending

- ✧ Regular use of diesel oil to clean the turntable, to prevent the formation of dirt. Daub lubricating oil in the skidway of the clamps.
- ✧ As shown in figure 15-a, control oil mist level that in the oil mist device, if the oil level is lower, you need to unscrew the oil F, and then as figure 15-a.,control oil mist level, HG ISO and viscosity of VG32 ISO type oil mist is recommended.(like: ESSO Febis K32, MOBIL Vacouline 1405, KLUBER32). when stepping the pedal 3 to 4 times, check whether there is oil drops into the oil cup F, if not, adjust screw D.
- ✧ As shown in figure 15-b, 20 days after the first use of the machine, re-tighten the screw A and B that is in the clamps.
- ✧ As shown in figure 15-c, machine horsepower is not enough, check the triangle belt of the motor by the following steps: (before any operation, to cut off the power) first, Unscrew the 4 screws on the side of the box, remove the left side protective plate of the tire changer, second, use special adjustment
- ✧ screw X (Figure 15-c) that is in the motor support base to adjust the triangle belt.
- ✧ As shown in figure 15-d, If the (I) lock is not good or can not be stopped at the top of the 2mm, it is necessary to adjust the nut on the operating arm.
- ✧ As shown in figure 15-e, when cleaning or replacing silencer which controls the

opening or closure of the clamps(G), follow the following steps: first, unscrew the 4 screws on the side of the box, remove the left side protective plate on the tire changer.

Second, in the pedal (VI, V2) system which controls the opening or closure of the clamps(G), unscrew silencer. Clean with compressed air nozzle, if damaged, replace with the same parts.

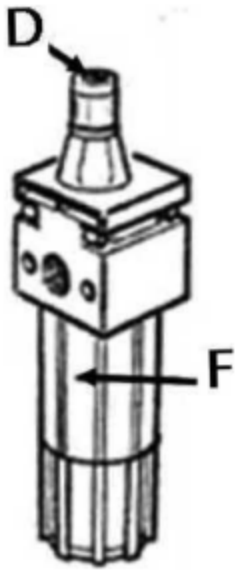

Figure 15-a

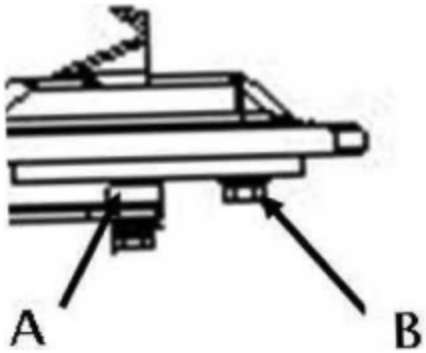

Figure 15-b

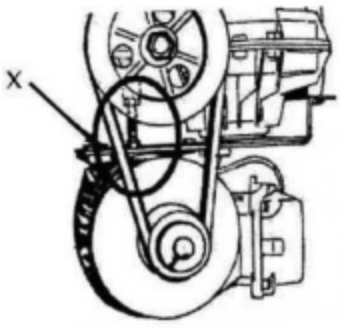

Figure 15-c

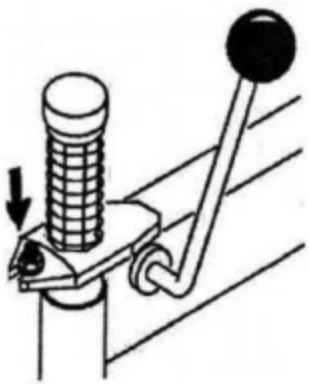

Figure 15-d



Figure 15-e

5.2 Storage and scrap

Storage

✧ If you want a long time storage of machine, please disconnect all the energy supply, and lubricate the skidway of the clamps on the turntable to prevent oxidation.

Scrap

✧ In accordance with the law of the metal and nonmetal for scrap processing. In the specified place release the oil inside the machine.

6 Fault causes and solutions

Note: if you can not solve the failure, please contact the manufacturer to provide help. We will be the first time to help you to solve the failure. Provide the relevant fault information and fault pictures, thus the manufacturer can get rid of the trouble at the fastest speed.

Failure phenomenon	Failure cause	Resolvent
Unidirectional rotation of the turntable	Universal steering switch damage	Replace universal steering switch
Rotary table does not rotate	Triangle damage	Replace triangle belt
	Universal steering switch damage	Replace universal steering switch
	Motor fault or line fault	Check motor and external plug or socket
Rotary clamp opening / closing speed is slow	Muffler blockage	Clean or replace muffler
The turntable can't lock the rim correctly	Clamps have trouble	Replace clamps
	Rotary cylinder has trouble	Replace cylinder or repair cylinder sealing ring

Working head cantouch the rim	Lock plate adjustment is not correct or faulty	Adjust or replace the locking plate
	Working head screw loose	Tighten screws
The pedal is not located at work position.	Return spring has trouble	Replace return spring
Operating difficulties of the tire device	Muffler blockage	To clean or replace the silencer
	Cylinder sealing ring damage of pressure device	Replace sealing ring

7 Assistant data

7.1 Electrical circuit diagram

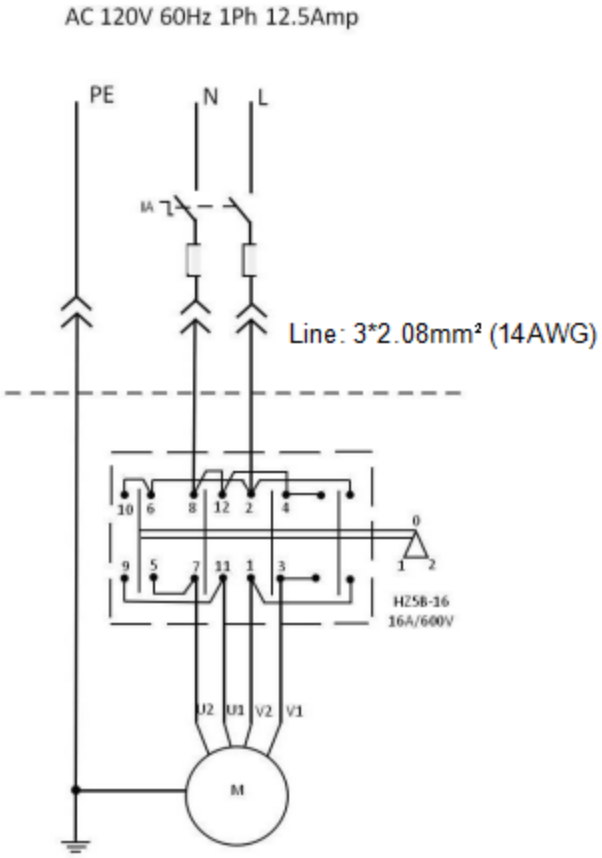

Electrical Parts List

Name	Specifications and models	Qty.	Remarks
Motor	AC 120V 60Hz 12.5Amp	1	
Pedal Exchange Switch	HZ58-16 16A 600V	1	
Connection Line	3*2.08㎜² (14AWG)	1	

7.2 Pneumatic diagram

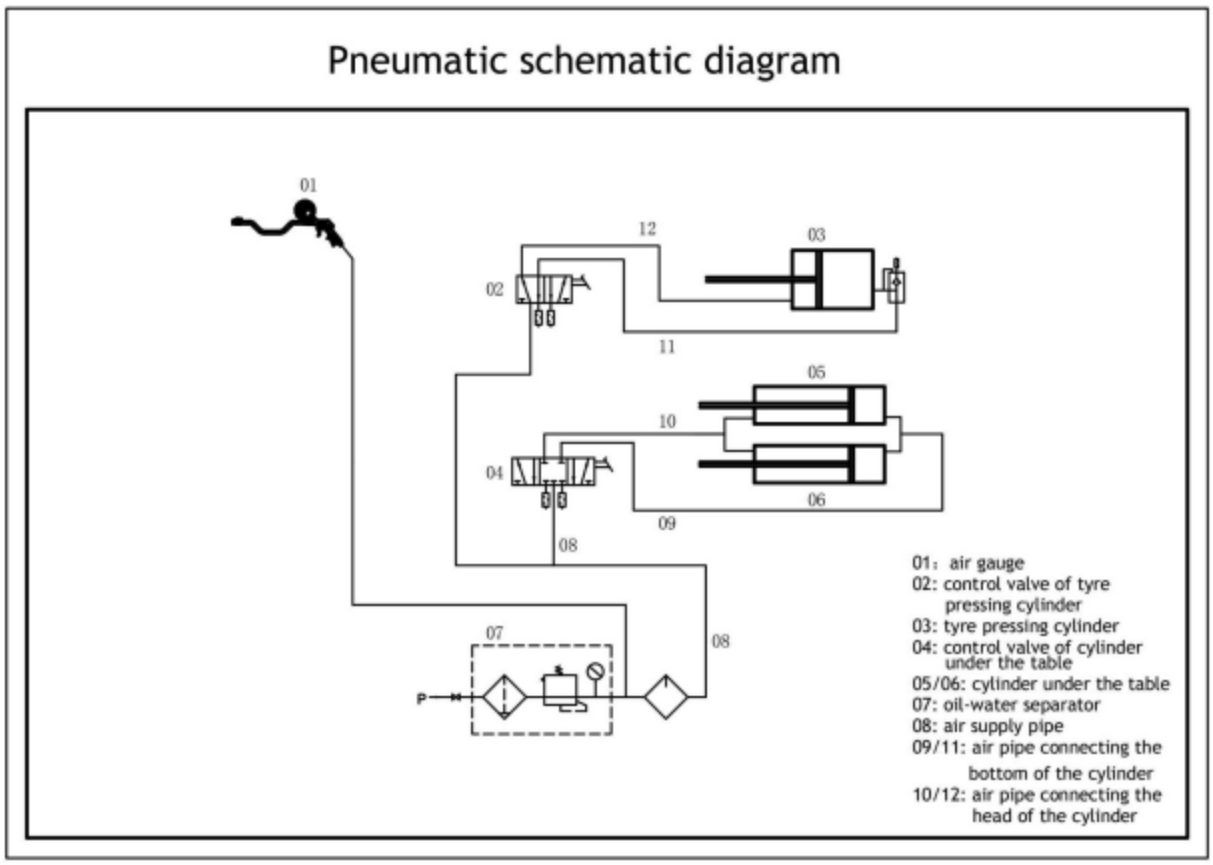

7.3 Explosion diagram

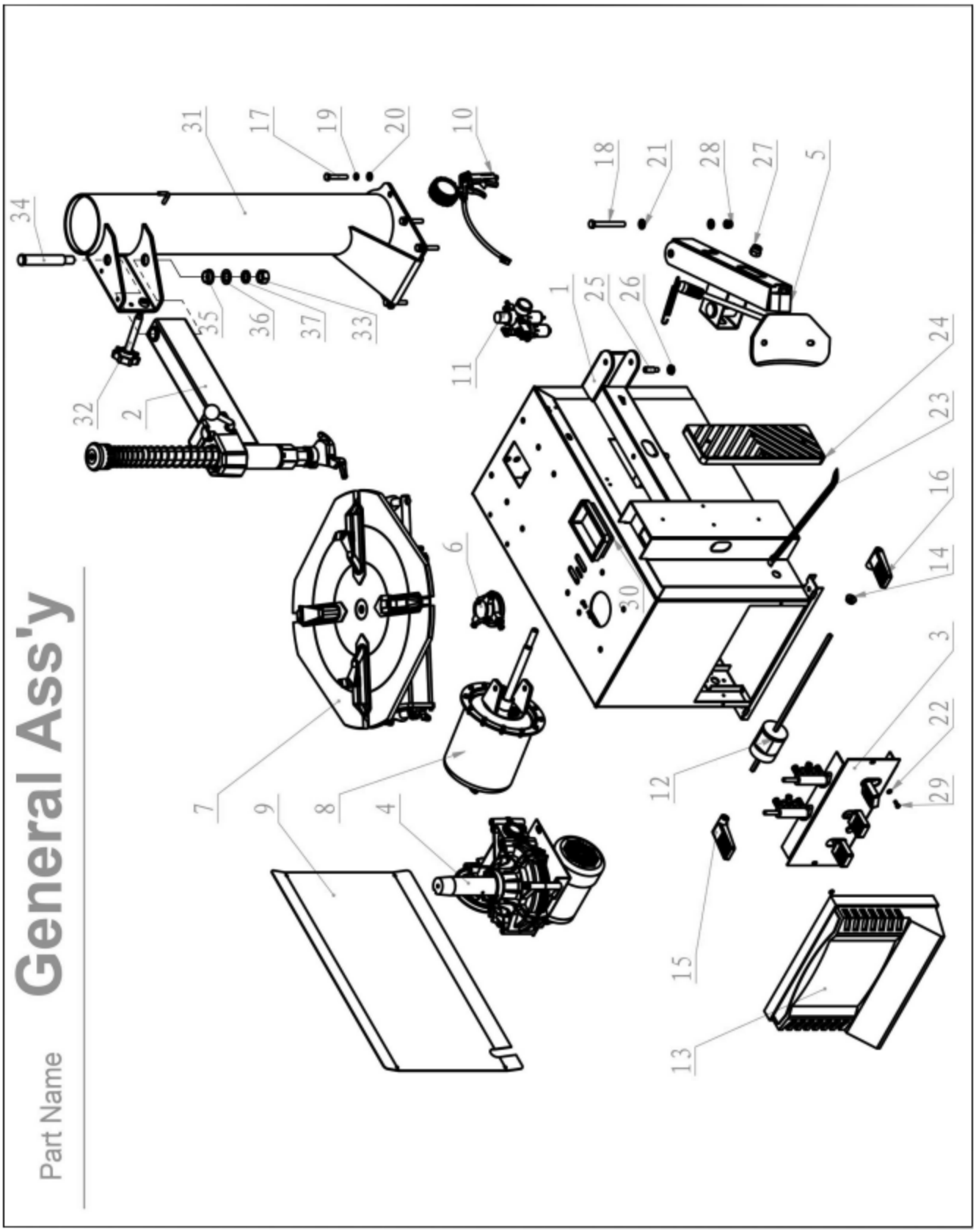

PART#	ITEM #	DESCRIPTION	QTY
1	6201000	Body weld assembly	1
2	8803000	Swing arm assembly	1
3	6208000	Pedal assembly	1
4	6207000	Gearbox assembly	1
5	8514000	Bead breaker assembly	1
6	8806000	Rotate union assembly	1
7	6206000	Turntable assembly	1
8	6205100	Bead breaker cylinder assembly	1
9	6201013	Side panel	1
10	6202007	Inflation gun	1
11	8801013	Air regulator assembly	1
12	6208007	Electric switch	1
13	6201014	Front cover	1
14	6201012	Square bar set	1
15	6208010	Left pedal	1
16	6208009	Right pedal	1
17	GB/T 5718	Bolt M10x60	6
18	GB/T 5718	Bolt M12x100	1
19	GB/T 93	Spring washer 10	6
20	GB/T 97.1	Washer 10	7
21	GB/T 97.1	Washer 12	2
22	GB/T 97.1	Washer 6	2
23	6201015	Crowbar	1
24	6201016	Rim support	1
25	8805026	Bolt M14x40	2
26	GB/T 6170	Nut M14	2
27	GB/T 889.1	Nut M16	1
28	GB/T 889.1	Nut M12	1
29	GB/T 70.1	Screw M6x16	4
30	8801012	Water Disc	1
31	6202000	Post weld	1
32	8802008	Handle wheel	1
33	GB/T 6170	Nut M20	1
34	8803007	Shaft for swing arm	1
35	8503015	Shaft Guide	1
36	GB/T 93	Washer 20	1
37	GB/T 97.1	Spring washer 20	1

Part Name **Swing Arm Ass'y**

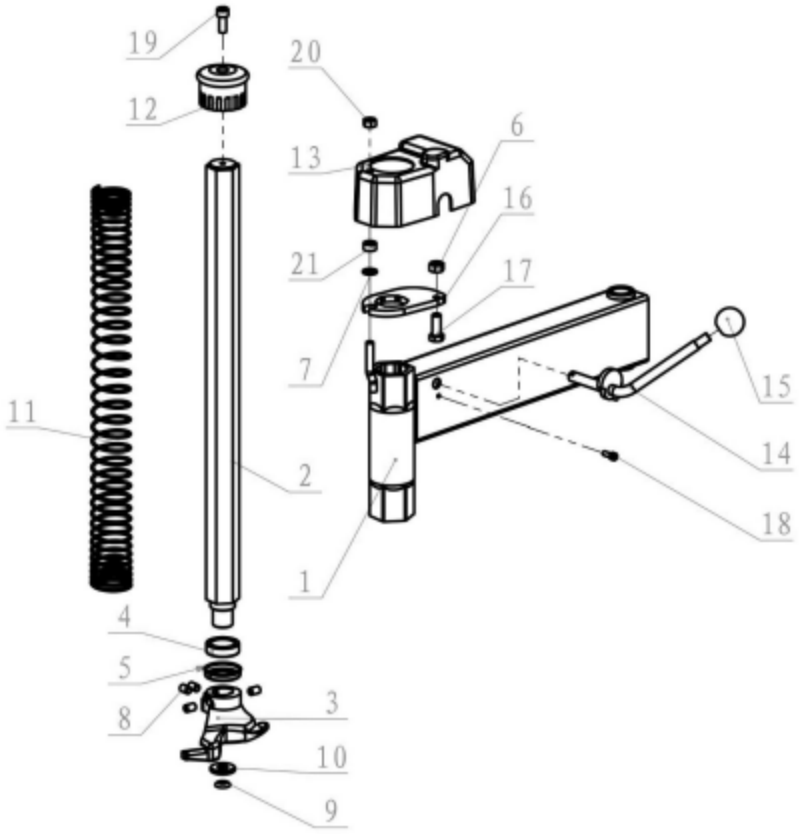

PART #	ITEM #	DESCRIPTION	QTY	PART#	ITEM #	DESCRIPTION	QTY
2-1	8803000	Swing arm weld	1	12-2	8803203	Knob	1
2-2	5753201	Mounting bar	1	13-2	8803005	Swing arm cover	1
3-2	5753202	Mounting head	1	14-2	8803100	Arm locking handle weld	1
4-2	8803207	Shock absorber	1	15-2	8803103	Arm locking handle	1
5-2	8803206	Shock ring	1	16-2	8803006	Locking plate	1
6-2	GB/T 6170	Nut M12	1	17-2	GB/T 5718	Bolt M12x30	1
7-2	GB/T 97.1	Washer 10	1	18-2	GB/T 70.1	Screw M6x16	1
8-2	GB/T 78-2000	Set-screw M12x20	4	19-2	GB/T 70.1	Screw M10x25	1
9-2	5753204	Washer	1	20-2	GB/T 6170	Nut M10	1
10-2	5753203	Washer	1	21-2	5753205	Nut	1
11-2	8803205	Spring	1				

Part Name **Pedal Ass'y**

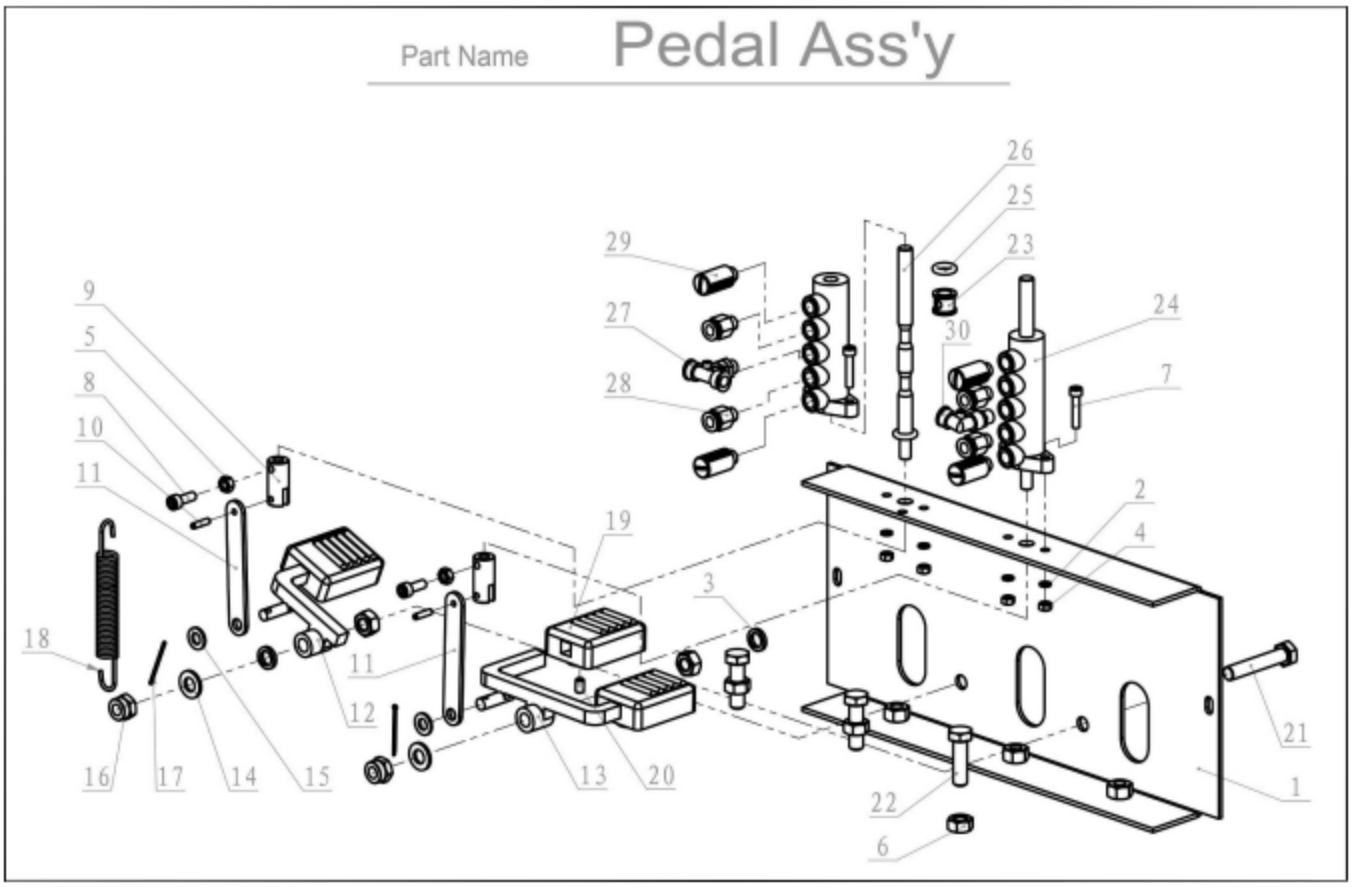

PART#	ITEM #	DESCRIPTION	QTY	PART#	ITEM #	DESCRIPTION	QTY
3-1	131000	Pedal mounting plate	1	3-16	GB/T 889.1	Nut M10	2
3-2	GB/T 93	Spring washer 5	4	3-17	GB/T 91	Pin 2x32	2
3-3	GB/T 93	Spring washer 10	2	3-18	6208006	Spring	1
3-4	GB/T 889.1	Nut M5	4	3-19	6208011	Pedal	3
3-5	GB/T 889.1	Nut M6	2	3-20	GB/T 78-2000	Set-screw M6x10	3
3-6	GB/T 889.1	Nut M10	5	3-21	GB/T 5718	Bolt M10x25	2
3-7	GB/T 70.1	Screw M5x25	4	3-22	GB/T 5718	Bolt M10x35	3
3-8	GB/T 70.1	Screw M6x16	2	3-23	6208103	Spacer bush	2
3-9	6208005	Linkage Sleeve	2	3-24	6208101	Valve body	2
3-10	GB/T 879.2	Round pin 4x16	2	3-25	6208104	O ring	4
3-11	6208004	Rod	2	3-26	6208102	Piston rod	2
3-12	6208003	Pedal holder	1	3-27	6208105	Union	1
3-13	6208002	Double pedal holder	1	3-28	6208106	Union	4
3-14	GB/T 97.1	Washer 10	2	3-29	6208107	Silencer	4
3-15	GB/T 97.1	Washer 8	2	3-30	6208108	Union	1

Part Name **Gearbox Ass'y**

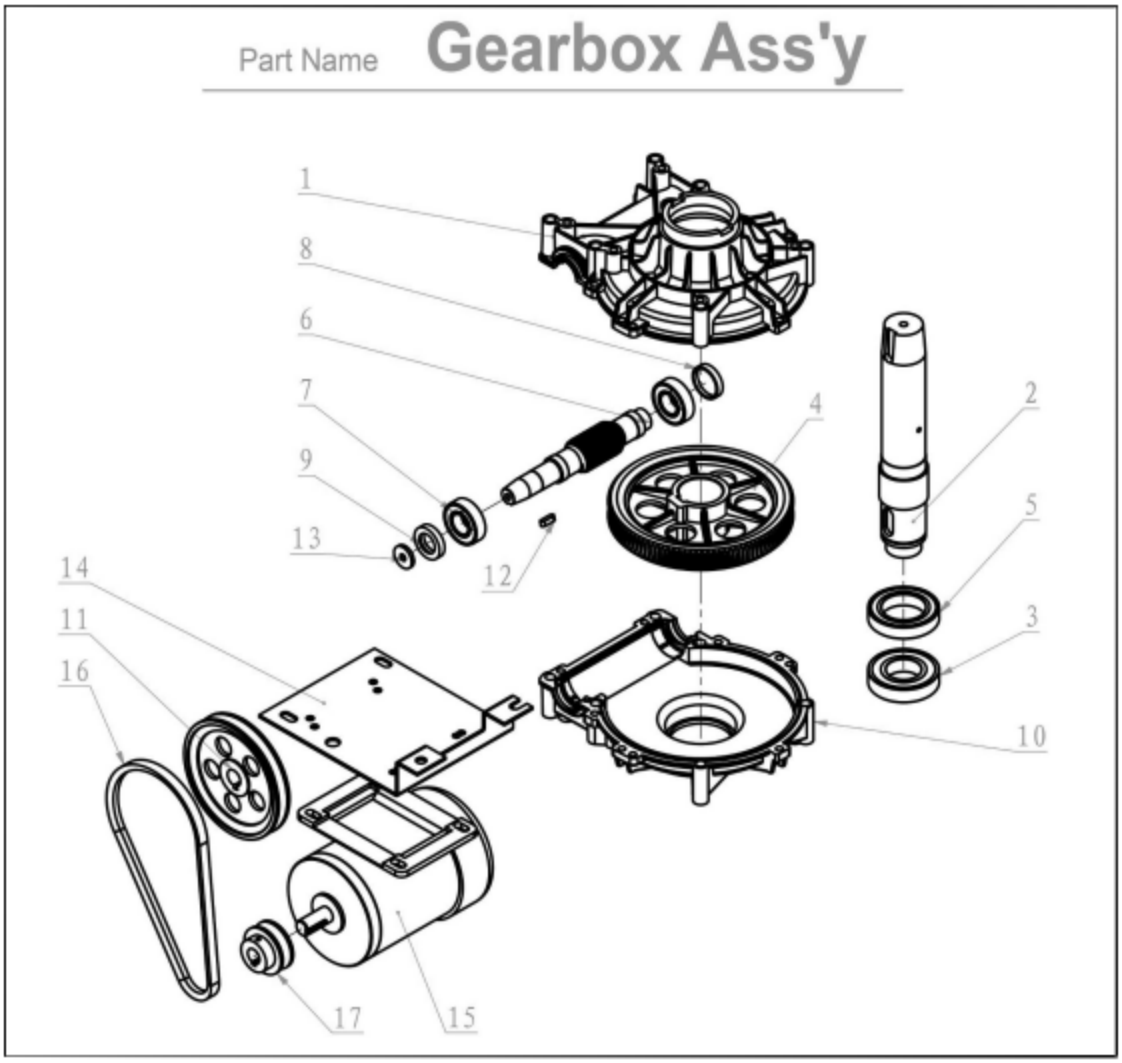

PART#	ITEM #	DESCRIPTION	QTY
4-1	6207001	Upper gearbox housing	1
4-2	6207003	Spindle	1
4-3	6207012	Bearing	1
4-4	6207006	Worm	1
4-5	6207011	Bearing	1
4-6	620700	Worm screw	1
4-7	6207010	Bearing	2
4-8	6207008	Seal cover	1
4-9	6207009	Oil seal	1
4-10	6207002	Lower gearbox housing	1
4-11	6207004	Belt pulley	1
4-12	6207005	Disk key	1
4-13	8503017	Washer	1
4-14	8807013-565	Mounting plate	1
4-15	6207013	Motor	1
4-16	6207014	V belt	1
4-17	6207016	Belt pulley	1

Part Name **Bead Breaker Ass'y**

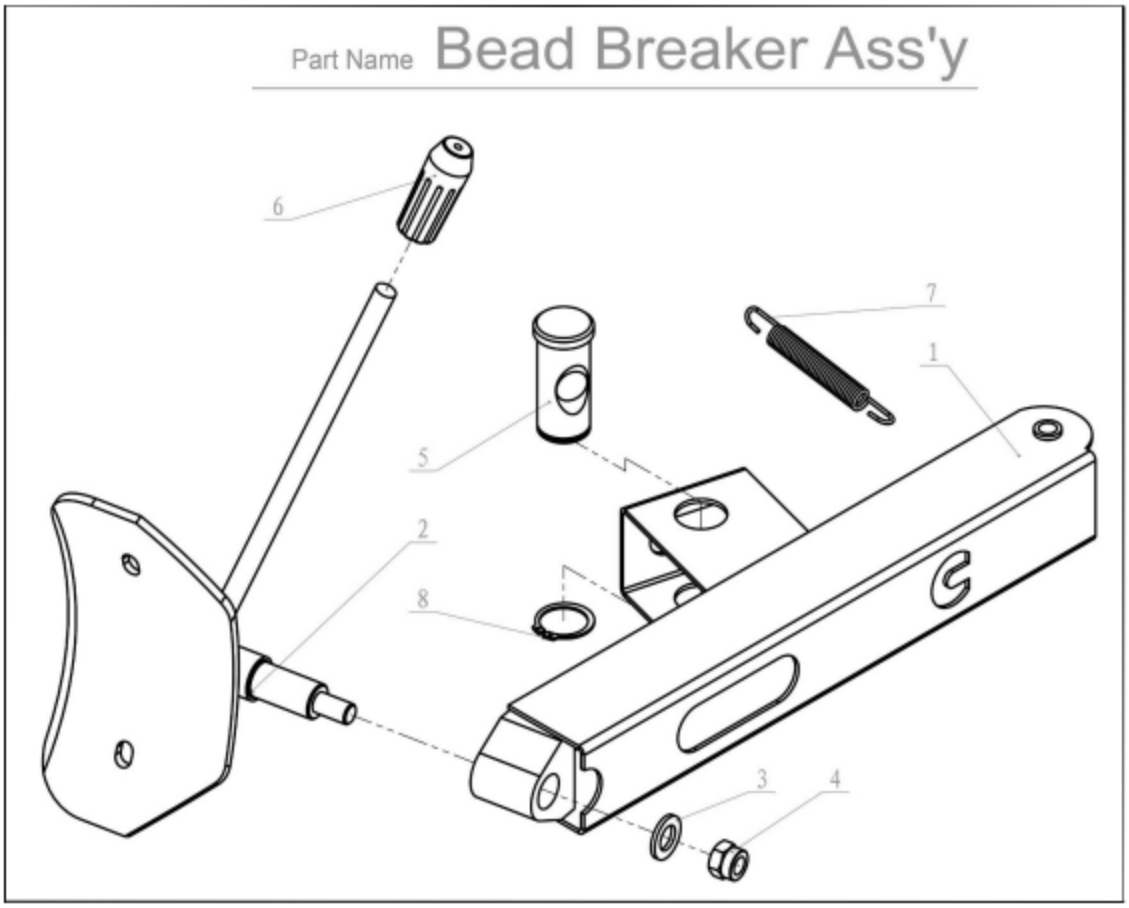

PART#	ITEM #	DESCRIPTION	QTY
5-1	8514300	Bead break arm weld	1
5-2	8514200	Bead break shoe weld	1
5-3	GB/T 97.1	Washer 16	1
5-4	GB/T 889.1	Nut M16	1
5-5	8514307	Spacer	1
5-6	8514306	Handle cover	1
5-7	8808028	Spring	1
5-8	GB/T 894.1	Seeder ring 34	1

Part Name **Rotate union Ass'y**

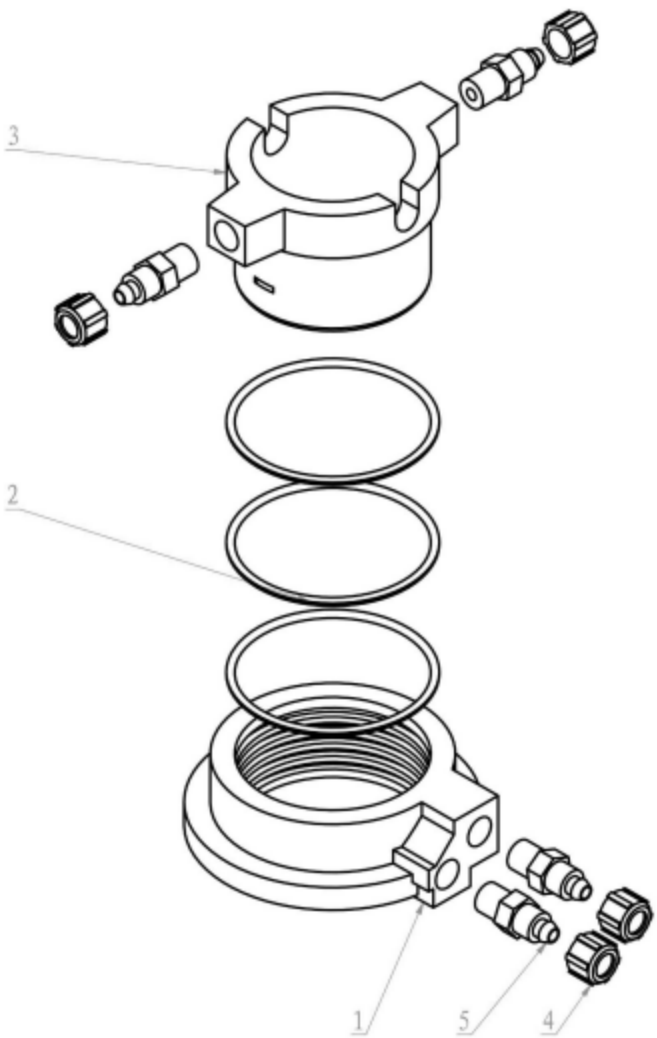

PART#	ITEM#	DESCRIPTION	QTY
6-1	8809001	Rotary union (inside)	1
6-2	8809003	O-ring	3
6-3	8809002	Rotary union (outside)	1
6-4	8809005	Nut	4
6-5	8809004	Union	4

Part Name **Turntable Ass'y**

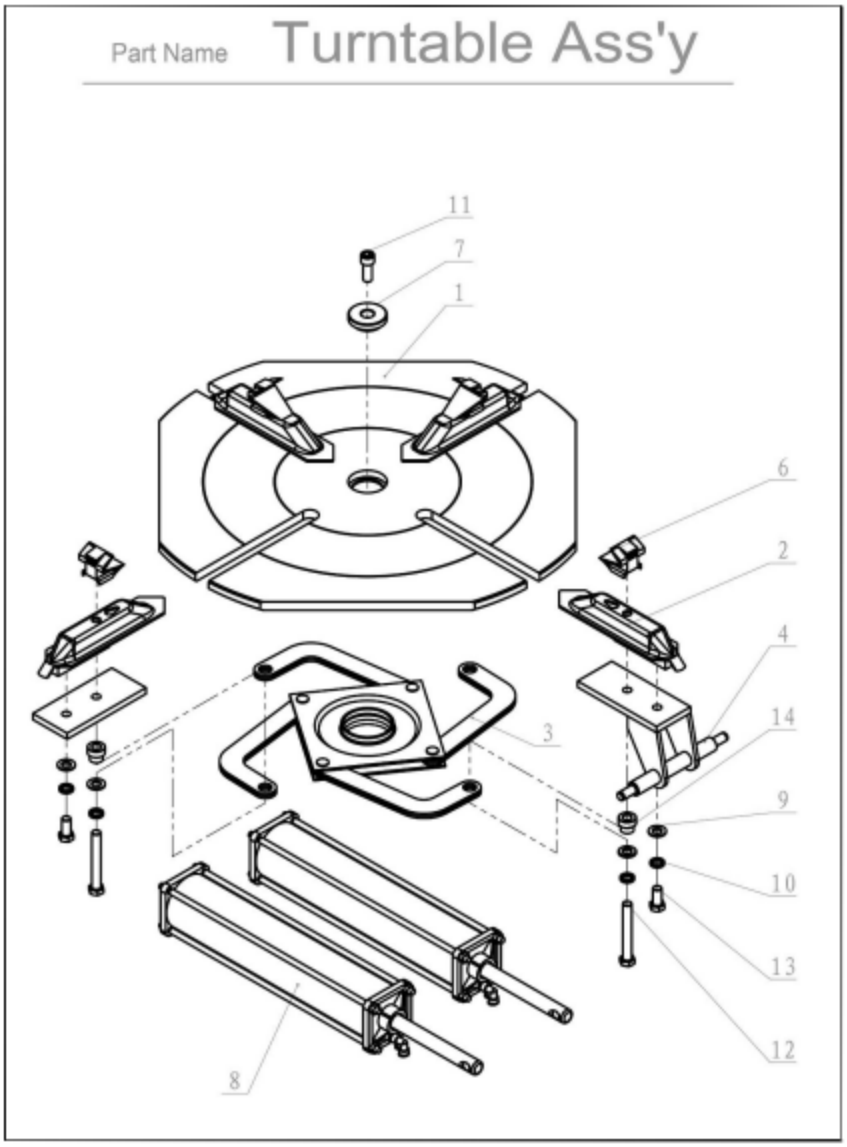

PART#	ITEM#	DESCRIPTION	QTY
7-1	6204100	Turntable weld	1
7-2	6206400	Slide	4
7-3	6206600	Connecting plate	1
7-4	6206300	Cylinder bracket	2
7-5	6206003	Slide plate	2
7-6	6206011	Clamp	4
7-7	6206200	Turntable cap	1
7-8	6206201	Cylinder assembly	2
7-9	GB/T 97.1	Washer 12	8
7-10	GB/T 93	Spring washer 12	8
7-11	GB/T 70.1	Screw M12x30	1
7-12	GB/T 5718	Bolt M12x90	4
7-13	GB/T 5718	Bolt M12x25	4
7-14	6206015	Pin bush	4

Part Name **Bead Breaker Cylinder Ass'y**

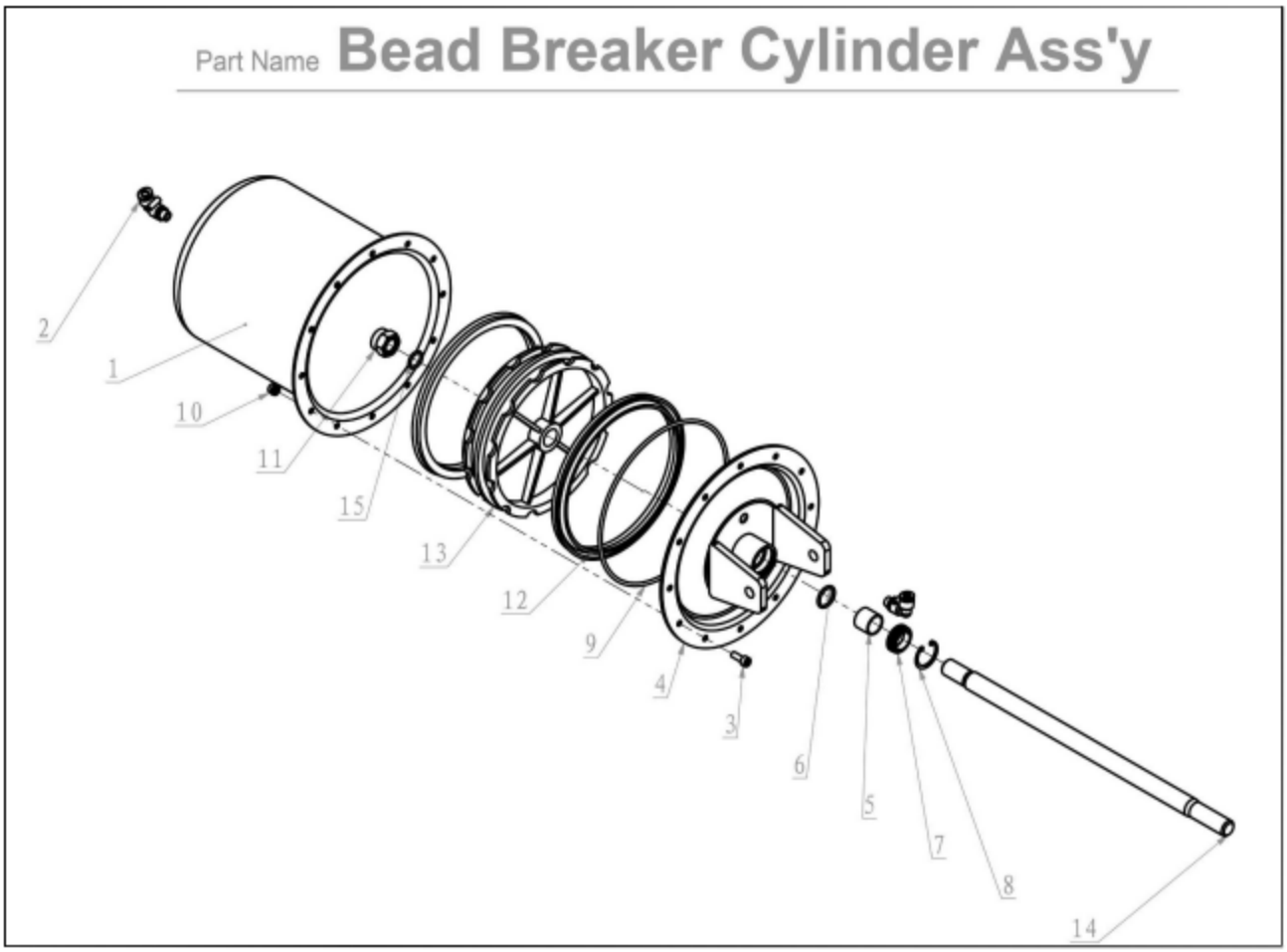

ITEM#	PART #	DESCRIPTION	QTY
8-1	6205001	Cylinder body	1
8-2	8805025	Union	2
8-3	GB/T 70.1	Screw M6x16	12
8-4	6205300	Cylinder housing	1
8-5	8805011	Spacer	1
8-6	6205005	O-ring	1
8-7	8805008	Y-ring	1
8-8	8805007	Seeder spacer	1
8-9	6205007	O-ring	1
8-10	GB/T 889.1	Nut M6	12
8-11	GB/T 889.1	Nut M16	1
8-12	6205008	Y-ring	2
8-13	6205006	Piston	1
8-14	6205011	Shaft for cylinder	1
8-15	6205009	O-ring	1