

AGT Industrial

Product manuals

Skid Steer Grader Attachment

Model:AGT-SSSCR72

Ver.1.1.4

https://www.agrotkindustrial.com/

AGT INDUSTRIAL

PRODUCT MANUAL

Skid Steer Grader Attachment

Model:AGT-SSSG72





- Please read the product manual completely before assembly
- Check against the parts list to make sure all parts are received
- Wear proper safety goggles or other protective gears while in assembly

Missing parts or questions on assembly?
Pleasecontact sales@agrotkindustrial.com

https://www.agrotkindustrial.com/

Directory

Product introduction 1/16

Operator 2/16

Safety precautions 3/16

Technical parameters 4/16

Installation 7/16

Handing safety 11/16

Limited Warranty 16/16

Product introduction

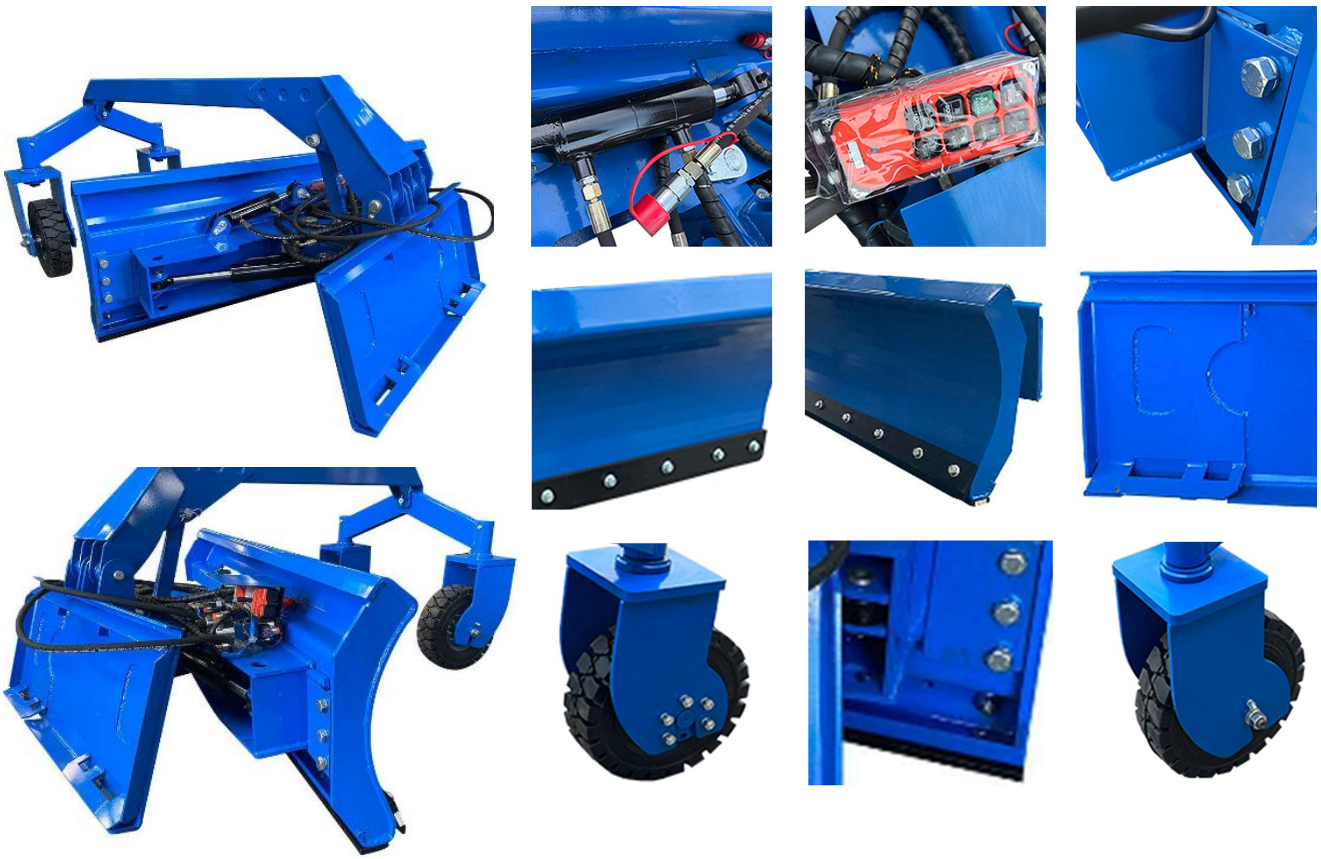

1. Our Grader Blade attachment can turn your skid steer into a high-performance grading machine. It features a 72" wide blade, control box for in-cab hydraulic control of angle and tilt, and a reversible/replaceable cutting edge. Also features a proportional current valve to gradually adjust the blade height, angle and tilt.
2. This feature-packed skid steer attachment is the ultimate grading and levelling machine with greater adaptability to handle uneven terrain and produce a clean job.
3. Supplied bolt-on extensions for added width.
4. Universal Skid Steer mount as standard.

Operator

Congratulations on owning this r Skid Steer Grader Attachment! Your Skid Steer Grader Attachment are carefully designed and manufactured to provide you with years of reliable service.

Your Skid Steer Grader Attachment will need some minor maintenance to keep it in excellent working condition.

Please follow all safety precautions and maintenance procedures described in this manual.

Please read and understand the instructions in this manual carefully before operation.

Please refer to the "Safety Labels" section for all instructions noted above.

No one is allowed to operate his equipment who has not fully read and understood this manual and has not been trained in safe deposit box operations.

Remember to use only parts replaced by the manufacturer.

Replacement parts may not meet the standards required for safe and reliable operation.

Safety precautions
BEFORE OPERATION

1. The operator must read the operation manual carefully before installation, operation or maintenance. Improper operation will cause the machine damaged or the operator dead.
2. Read all the safe signs and safe declarations. Obey all the professional safe terms, local laws or the professional directions.
3. Familiar with the duty Skid Steer Grader Attachment about functions, specs and operation. Replace the to-be-damaged parts in time. Make sure all the hydraulic installations and couplings connect firmly, and all the safe signs stick on the suitable positions clearly.

ALWAYS watch for overhead power lines.
NEVER operate a mechanical device when a bystander is within 300 feet of your work area. Flying debris can cause serious injury or even death.

- NEVER position your body or limbs under an unsupported cutter deck.
- DO NOT allow this machine to contact buildings, utilities, large rocks or tree stumps or you may lose control of the skid steer loader.
- NEVER use drugs or alcoholic beverages while operating or servicing this machine.
- ALWAYS operate this attachment during daylight or well-lit areas.
- To prevent the skid steer loader and implement from rolling forward, stop the engine and set the parking brake when exiting the skid steer loader.
- Inspect implement for missing hardware prior to using this machine.
- DO NOT allow children to play on or around this equipment at any time. Store this implement in an area not frequented by children.
- ALWAYS wear the proper personal protection equipment while operating or servicing this machine. NEVER operate or service this machine with bare feet, sandals, or other light footwear.
- ALWAYS wear work gloves when handling cutter blades as they are often very sharp.
- ALWAYS use eye protection while operating or servicing this machine.
- DO NOT speed! Keep your driving speed between 2 and 5 mph.



Wear appropriate safety glasses, goggles or face masks Control Forestry Skid Steer Grader Attachment work, or any operation caused by dust, flying Debris, or any other hazardous material.

Technical parameters

Model:	SSSG72
Working Width:	72″
Working Pressure (MPa):	20
Skid Steer Interface Dimensions:	45″x16″
Swing Angle Up And Down:	35
Swing Angle Left And Right:	25
Hydraulic Tilt:	±15°
Hydraulic Angling:	±26°
Height Adjust:	±5.9in

Work environment:

Temperature: - 20 ~ 50 ℃

Height: 100 meters or less

Relative humidity :≤85%



Technical parameters

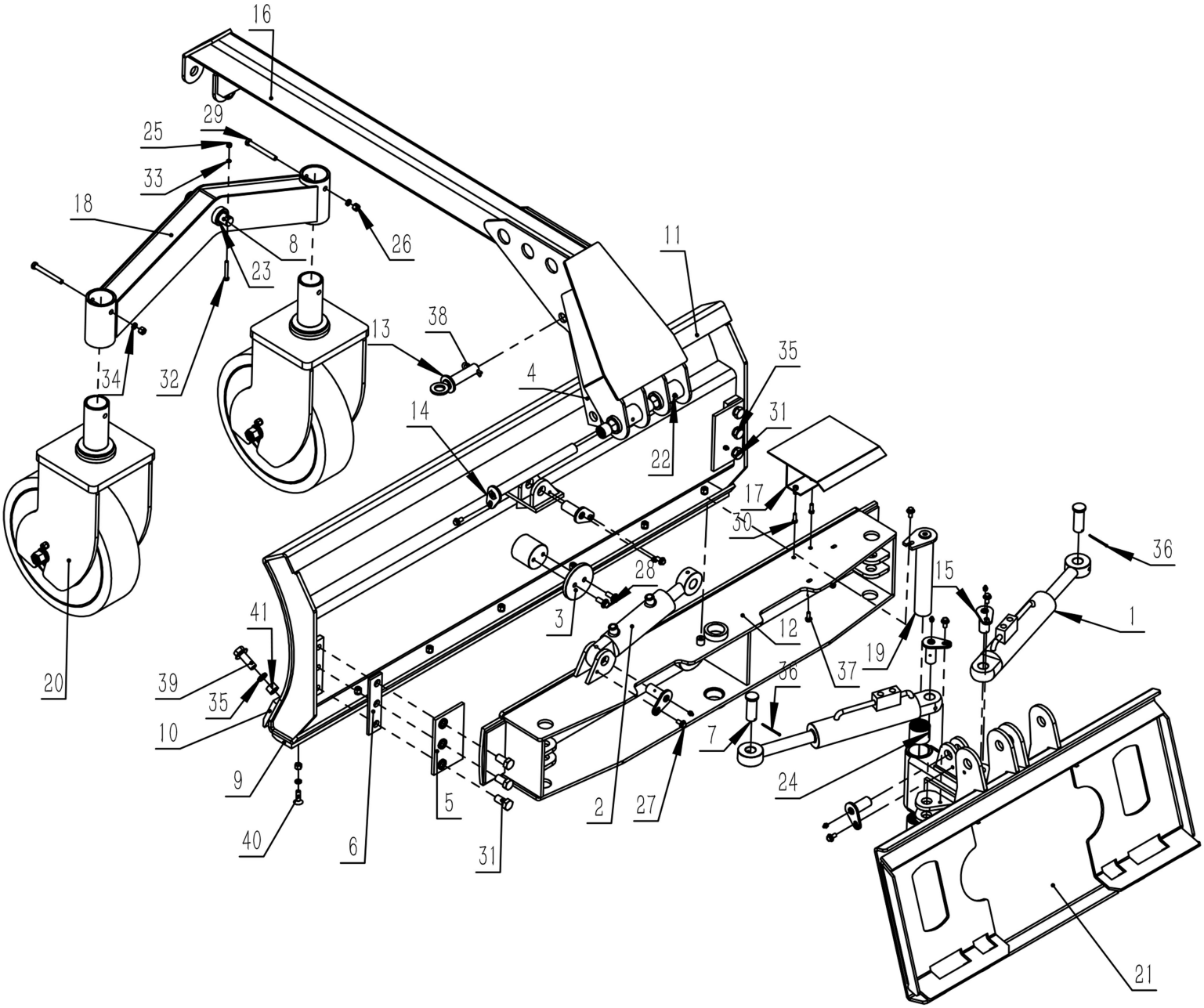

S/N	PART DESCRIPTION	QTYS	NOTE
1	Oil cylinder assembly	2	
2	Oil cylinder assembly	1	
3	Front frame is welded	1	
4	Connection plate 3	2	
5	Connection plate 2	2	
6	Connection plate 1	2	
7	Pin 1	2	
8	Pin 2	1	
9	Scraper （UP）	1	
10	Scraper （Down）	1	
11	Frame welded	1	
12	Rotary frame welding	1	
13	Bolt weld to 3	1	
14	Bolt welded to 2	1	
15	Bolt welded to 1	5	
16	Connecting frame is welded	1	
17	Guard plate is welded	1	
18	Wheel swing arm welding	1	
19	Bolt welded	1	
20	Wheel frame of	2	
21	Front frame is welded	1	
22	Butter nozzle (M10x1)	7	
23	Oily copper sleeve (30x38x30)	6	
24	Oily copper sleeve (50x60x50)	2	
25	Hexagon nut (M8)	1	
26	Hexagon nut (M12)	9	
27	Hexagon flange bolts (M10x20)	7	
28	Hexagon flange bolts (M12x30)	2	
29	Bolt (M12x110)	2	
30	Bolt (M8x25)	4	
31	Bolt (M20x40)	6	
32	Bolt (M8x60)	1	
33	Spring washers （φ8）	3	
34	Spring washers （φ12）	9	
35	Spring washers （φ20）	15	
36	Cotter pin （φ4x63）	2	
37	Flat washer （φ8）	2	
38	Type B pin （φ6）	1	
39	Hexagonal flange bolt （M20x55）	9	
40	Hexagon socket countersunk head screws （M12x40）	7	
41	Hexagonal nut（M20）	9	

Installation

remote control

1.The transmitter needs two AA alkaline batteries, please do not use rechargeable batteries. When the battery has enough voltage, press the button of the transmitter, the LED indicator of the transmitter will flash green; when the battery voltage is insufficient, the LED indicator of the transmitter will flash red or not light, which means the battery needs to be replaced at this time;

2.Equipment on the same channel cannot be used within 200 meters to avoid mutual radio interference;

3.The accessory fuse is placed in the back cover of the remote control for later replacement;

4.Transmitter button operation instructions: ①The green button is the start button, and the red one is the stop button;②After pressing the green start button, up, down, east, west, south and north correspond to 6 solenoid valve coil indicators (according to the solenoid valve Quantity, some buttons are not used),the remote control button corresponds to the solenoid valve, the customer can adjust by replacing the solenoid valve and the quick plug of the receiver according to their habits; ③ After the operation is completed, press the red stop button to prevent the occurrence of misoperation.







5.The receiver controls 2 solenoid directional valves in the figure below, which can be extended to 3 solenoid valves.Customers can wire according to the wiring diagram.The 4 plugs in the figure are connected to the corresponding Receptacles on the solenoid valve, which are signal lines; the single Receptacle is the power line, which can receive the electrical signal of the transmitter by providing 12V power supply.



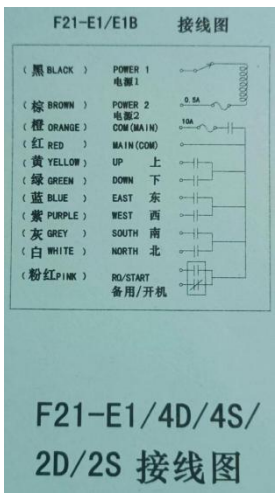

Installation

Unpack and check

Check for missing or damaged components according to the packing list.
If you have any questions, please contact the supplier. List of details As the table above:

Machine installation

Equipment must be installed on a solid concrete floor or similar. If the ground is not firm, it will not be able to connect to the loader. There should be a space around the device for easy operation.

Connecting Vibratory Roller Attachment

Consult your skid steer operator's manual for specific instructions on how to connect your Forestry Disc Mulcher to your skid steer loader.

General Attachment Method

1. Make sure the hydraulic lines are clear from the front side of the Vibratory Roller Attachment attachment plate and that the locking pins on the skid steer mounting plate are retracted.
2. Drive forward and place top of skid steer mounting plate under the attachment mounting flange. See Figure below.
3. Slowly raise and tilt back the skid steer mounting plate untilthe Vibratory Roller Attachment attachment plate rests flat against the skid steer mounting plate.
4. Activate your skid steer's lever lock switch to engage and lock the pins into the flange slots of the brush cutter's attachment plate. If your skid steer does not have this switch, push the latch handles down until you can see the lock pins extend into the attachment flange.
5.Connect the attachment hydraulic hoses and the case drain hose (SBCNS model only) to the auxiliary supply couplers located on your skid steer loader lift arm.

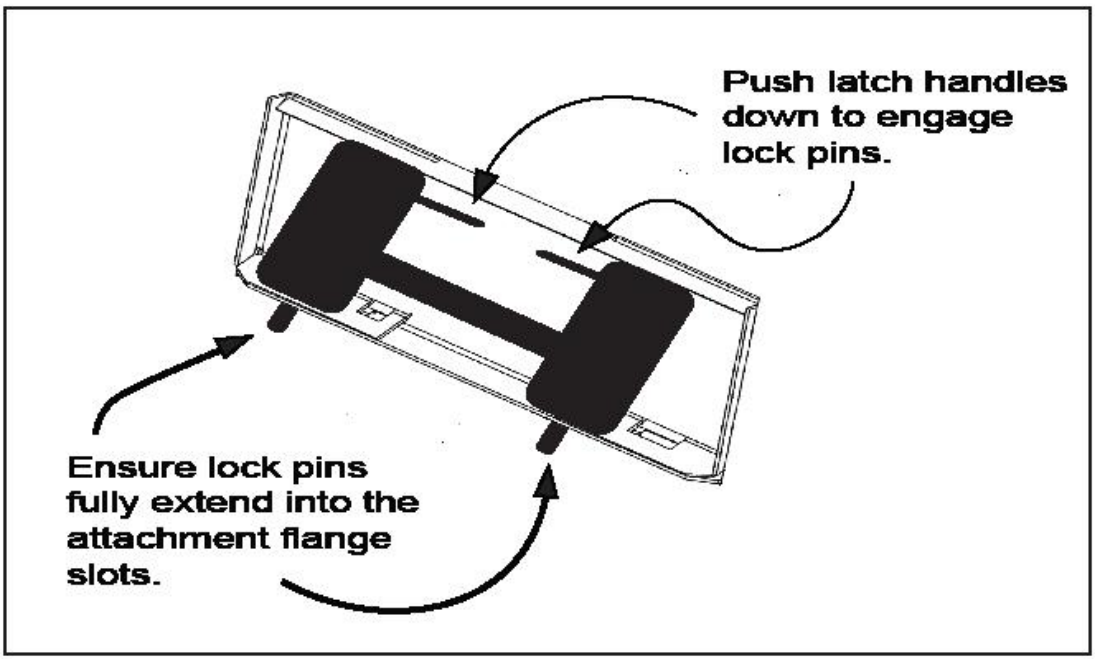

Skid Steer Mounting Plate to Attachment Mounting Flange

Installation

Note: this drawing does not represent the appearance of the equipment
For actual purchase, this figure is only for installation location reference.

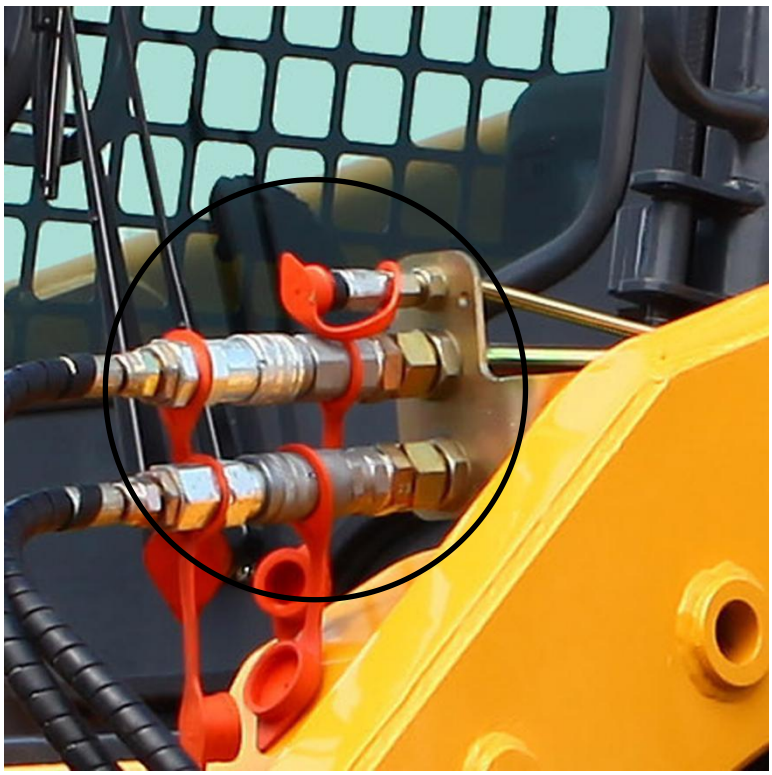

Oil pipe connection: Skid Steer Soil conditioner is equipped with 3 oil pipes, which are return oil pipe, inlet oil pipe and outlet oil pipe. Connect the tubing to the loader tubing connection.

Installation

Safety Instruction

1. Before the installation, please be sure to read the manual
2. Before using this equipment it should to know its production or working capacity, its dimensions and operation steps.
3. Pay attention to the flying objects caused by the operation of this equipment, at the same time operator should be installed with the glasses, helmet and mask.
4. Under high pressure, hydraulic oil’s leak will cause harm or even death to the staff, operators should as far as possible away from leaking oil pipeline .
5. Don't modify equipment, it can reduce machine’s performance, Security and reliability.
6. Equipment working environment requirements; Flat ground, open vision。
7. Make sure this is no pollution in steps and armrest of the equipment.
8. When operating, be sure that this is nobody around the equipment；
9. Operator do not leave the machine when it working。
10. Isolating working area when working， avoid people and animals close to the machine and be hurt by cutting pieces.
11. Do not run this machine on steep hills, lest cause tilting.
12. Do not drunk when operating this machine .
13. Before operator leave the skid steer loader, make sure to put mulcher attachment fell to the ground, then close the skid steer engine and pull out its key.
14. Check all fasteners, make sure they has no loose phenomenon. Change the damage parts in time, and make sure all warning signs clear and clean, change them if damage happens.
15. Before every time usage, it should check whether the bolt fastening everywhere.

Handling safety

Maintenance Overview

The maintenance procedures described in this manual should only be carried out by qualified mechanics who have been trained to repair this machine.
Some procedures require special tools and skills to complete. DO NOT attempt to repair or perform service work on this machine unless you have the skills and tools to do so. Contact your local dealer for maintenance and repair services.

NOTICE

Improper maintenance or modifications to the design or performance of this machine will void the warranty. ONLY use genuine SPARTAN EQUIPMENT replacement parts on this machine.

Safety Instructions

- Obey the following safety instructions when servicing or repairing this machine.

- Wear proper Personal Protective Equipment (PPE) while working on this machine, which may include safety glasses, hard hats, steel toe boots, gloves, etc.
- Wear a welding helmet when welding to protect your eyes, face and neck from flash burn, ultra-violet radiation and heat.
- Ensure all jack stands, lifts and hoists are in good working condition and have the rated load capacity to support the load.
- If servicing is performed while the Vibratory Roller Attachment is attached to the skid steer, turn engine off, set parking brake and chock wheels to prevent skid steer from moving.
- Only perform service work in a well-lit area.
- Allow the machine to cool down before servicing this machine. Hot oils can burn your skin.
- NEVER work under a mechanical device without support.

Handling safety

Storage Tips

To get years of quality use out of your Skid Steer Grader Attachment, follow these storage tips:



Ensure Skid Steer Grader Attachment is free of debris, dirt, grime and grease.

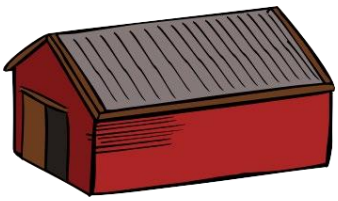

Store your Skid Steer Grader Attachment in a dry shed or garage.



When storing your Skid Steer Grader Attachment for the season, cover with a weather proof tarp to protect it from the elements.



Blade Holder Removal

WARNING

To avoid an accident that could result in death or serious injury, NEVER place your body under an unsupported cutter deck when servicing this Vibratory Roller Attachment. ONLY service the brush cutter on stable, even terrain. NEVER park on sloped terrain to avoid being struck and killed or seriously injured by the unexpected rolling or movement of the skid steer.

NOTICE

ALWAYS release the hydraulic system pressure from the auxiliary hydraulic circuit prior to removing the blade holder.

Handling safety

OSHA 1910.266 Appendix A - First-aid Kits

Source:
http://www.osha.gov/pls/oshaweb/owadisp.show_document?p_table=STANDARDS&p_id=9863.
Accessed: 16 Dec 09

The first-aid kit information below was directly obtained from OSHA regulations. Having a kit available at the job site is required by OSHA for logging operations and is highly recommended by AGT Manufacturing.

The following list sets out the minimum acceptable quantity and type of first aid supplies for the first aid kit required under paragraph (d)(2) of the Standard of Practice. The contents of the first-aid kit listed should be adequate for small work sites, consisting of approximately two to three employees. When larger operations or multiple operations are being conducted at the same location, additional first-aid kits should be provided at the work site or additional quantities of supplies should be included in the first-aid kits:

1. Gauze pads (at least 4 x 4 inches).
2. Two large gauze pads (at least 8 x 10 inches).
3. Box adhesive bandages (band-aids).
4. One package gauze roller bandage at least 2 inches wide.
5. Two triangular bandages.
6. Wound cleaning agent such as sealed moistened towelettes.
7. Scissors.
8. At least one blanket.
9. Tweezers.
10. Adhesive tape.
11. Latex gloves.
12. Equipment such as resuscitation bag, airway, or pocket mask.
13. Two elastic wraps.
14. Splint.
15. Directions for requesting emergency assistance.

Handling safety

Inspection Checklist

This checklist is to be completed prior to every use of the Skid Steer Soil conditioner.

DO NOT use a Skid Steer Vibratory Roller Attachment that fails inspection until it has been repaired.

Check for damaged hoses or hydraulic leaks. See hydraulic safety precautions in this manual.
Grease all Imbrication points. See lubrication point diagram in this manual.
Dress with a grinder periodically.
Check for cracked welds.
Check for bent or damaged components.
Check for damaged cylinder pins.
Check for missing or loose fasteners (bolts, nuts, snap rings, etc.)

Inspector Name Date

* * * IMPORTANT * * *

If you are using your Skid Steer Soil conditioner as part of a commercial operation it is HIGHLY recommended that you keep a copy of all inspections performed on the machine and the Skid Steer Soil conditioner. Also maintain records of repairs that are performed as a result of failed inspections. OSHA inspectors will likely ask for proof that you are taking steps to mitigate risks and to comply with OSHA regulations. Refer to www.osha.gov on the Internet and search for "1910.266" to display regulations specific to logging operations.

Handling safety

Safely Checking for Hydraulic Leaks

WARNING:
There is significant risk of injection from the high pressure spray at hydraulic leaks

- The tremendous energy used to operate the machine and attachments can be stored in the hydraulic system even when the machine engine is off.
- Very serious injuries from hydraulic fluid injection can seem insignificant at first. Often it can seem

like a pin prick or tingling, but later it may require amputation. HIGH PRESSURE LEAKS ARE

OFTEN INVISIBLE.

Hydraulic system injuries can include:
- Burns from hot fluid
- Injection of hydraulic fluid
- Trauma from energized components or flailing lines

DO	DO NOT
Always Lock Out Tag Out machine controls before working on the machine or attachment. Always use the methods recommended by the manufacturer to block loader arms and other moving components to prevent accidental movement. Always use appropriate PPE (Personal Protective Equipment) when working on/around machinery. Take an approved safety course related to hydraulic systems. Local university extension programs and equipment dealers will offer training on hydraulic safety.	DO NOT use your hands, or other body parts, to inspect for hydraulic leaks. DO NOT position yourself in pinch points when the machine has not been properly blocked, locked out and tagged out. DO NOT "crack" a hydraulic fitting to release hydraulic pressure. Severe risk of injection. DO NOT tighten or loosen hydraulic components when the system is pressurized. DO NOT assume that the system is depressurized.

Limited Warranty

The goal of agrotkindustrial.(“AGT”) warranty policy is to assure confidence, reduce downtime and minimize cost of ownership. Should you want to verify warranty, or should potential issues arise,please contact your authorized dealer or AGT’s Customer Service Team at service@agrotkindustrial.com, +1 913-244-6269 and we will strive to resolve any issues in a timely manner.

AGT Attachments (“AGT”) offers a Limited Warranty on Shear, Grapple, and Puller Attachments delivered hereunder against faulty workmanship and use of defective materials for a period of twenty four (24) months from the date of shipment to the original purchaser from USA and/or USA Authorized Dealers. AGT offers a Limited Warranty on Saw Attachments against faulty design, material, and workmanship for normal use when properly maintained for a period of twelve (12) months from date of shipment. The Warranty for all products listed above and delivered hereunder to Rental users is for a period of six (6) months from the date of shipment to the original purchaser. Seller offers a Limited Warranty for miscellaneous parts and accessories such as cylinders, hoses, switches, valves and wiring delivered hereunder against faulty workmanship and use of defective materials for a period of three (3) months from the date of shipment. This warranty does not include, and there in hereby excludes, maintenance parts and consumables including but not limited to hydraulic fluid, oil, belts, teeth, blades, filters and other similar items.

AGT offers a Limited Warranty on Auger Attachments against faulty design, material, and workmanship for normal use when properly maintained.

Auger Gearboxes are warranted for a period of sixty (60) months from date of shipment, Auger Motors are warranted for twenty four (24) months from date of shipment.Auger Bits, Frames and Cradles are warranted for a period of twelve (12) months from date of shipment.Refer to the Product Manual for proper maintenance procedures.Spare, Replacement and After Warranty Parts including hoses and components are warranted for three (3) months. AGT Auger Teeth, Pilots, Adaptor and Extensions are manufactured with a patented design to interface with AGT Auger attachments extensions and adaptor.The use of attachments other than AGT Auger Teeth, Pilots, attachments, extensions and/or adaptor, will void all warranty on Auger Drive and Bits.The use of AGT adaptor on unapproved attachments is not sanctioned.A “home-made” or non-standard attachment outside the specifications for the machine will void the warranty.



sales@agrotkindustrial.com
https://www.agrotkindustrial.com/