PRODUCT MANUAL

Skid Steer Concrete Breaker Attachment

Model: AGT-SSHH-680A





- Please read the product manual completely before assembly
- Check against the parts list to make sure all parts are received
- Wear proper safety goggles or other protective gears while in assembly

Missing parts or questions on assembly?
Pleasecontact sales@agrotkindustrial.com
https://www.agrotkindustrial.com/

TABLE OF CONTENTS

Table Of Contents 2/16

Safety Precautions 2/16

Standard Specifications 2/16

Construction & Main Parts 2/16

Hammer Tools 2/16

Preparation for Installation & Operation 2/16

Operation (Breaking) 2/16

Installation and Removal of Hammer 2/16

Repair & inspection 2/16

Trouble Shooting Guide 2/16

Tool Selection 2/16

Customers' Report 2/16

2. Safety Precautions

1.1 Safety Precautions

1) This manual contains safety, operation, and routine maintenance instructions. It does not contain service disassembly instructions. If needed, complete service disassembly and assembly instructions are contained in the manual, which can be ordered from your

Hydraulic Attachments -Hydraulic Breaker authorized and certified dealer.

2) Breaker Operator and maintenance personnel must always comply with the safety precautions given in this manual and on the decal and tags attached to the breaker and the hose.

3) These safety precautions are given for your safety. Review them carefully before operating the breaker and performing general maintenance or repairs.

4) Supervising personnel or the owner operator should develop additional precautions relating to the specific work area and local safety regulations. Place the added precautions in the space provided under local safety regulations.

5) Please read the following warning.

⚠ DANGER

SERIOUS INJURY OR DEATH COULD RESULT FROM THE IMPROPER REPAIR OR SERVICE OF THIS BREAKER.
REPAIRS AND/OR SERVICE TO THIS BREAKER MUST ONLY BE DONE BY AN AUTHORIZED AND CERTIFIED DEALER.

1.2 General Safety Precautions

(1) The Hydraulic Breaker Series will provide safe and dependable performance of operation in accordance with the instructions given in this manual. Read and understand this manual and any decals and tags attached to the breaker before operation. Failure to do so could result in personal injury or equipment damage.

a) Operate the breaker in accordance with all laws and regulations which affect you, your equipment and the work site.

b) Do not operate the breaker unless you have read the carrier equipment manual and thoroughly understand all safety, operation and maintenance instructions.

c) Ensure that all maintenance procedures recommended in this manual are completed before using the equipment.

d) The operator must not operate the breaker or the carrier if any people are within the area where they may be injured by flying debris or movement of the equipment.

e) Know the limits of your equipment.

f) Establish a training program for all operators to ensure safe operation.

g) Do not operate the breaker unless thoroughly trained or under the supervision of an instructor.

h) Become familiar with the carrier controls before operating the carrier and the breaker.

i) While learning to operator the breaker and carrier, do so at a slow pace. If necessary, set the carrier mode selector to the slow position.

j) Make sure all controls (levers and pedals) are in the neutral position before starting the carrier.

k) Before leaving the carrier, always lower the boom and ensure the carrier is stable. Never be the machine with the engine running. Always engage the parking brake.

l) Stop the engine before attempting to make any repairs, adjustments or servicing to either the carrier or the breaker.

m) Do not operate the breaker at oil temperatures above 175˚F/80˚C. Operation at higher temperatures can damage to the internal components of the breaker and back-hoe/excavator and will result in reduced breaker performance.

n) Do not operate a damaged, leaking, improperly adjusted, or incompletely assembled breaker.

o) Do not modify this breaker in any manner.

p) To avoid personal injury or equipment damage, all breaker repairs, maintenance and service must only be performed by authorized and properly trained personnel.

q) If you do not understand how to safely operate your breaker, contact an authorized dealer for assistance.

r) Keep this manual with the breaker.

s) Do not operate this equipment if you are taking medication which may affect your mental judgment or physical performance.

t) Do not operate the equipment if you are under the influence of drugs or alcohol.

u) Remove the breaker from the carrier during transport.

3. Standard Specifications

3.1 Standard Specifications

Model	Unit	HB53S	HB90S
Weight	kg	231	406/492
Working Flow Rate	liter /min	25-45	50-90
Oil Relief Pressure	kg/cm2	160	170
Working Pressure	kg/cm2	90-120	120-170
Impact rate	bpm	500-1000	400-800
Chisel Diameter	mm	¢53	¢75
Hose Diameter	inch	1/2	‘1/2
Back head pressure	kg/cm2	16	16±0.5
Suitable carrier	**Ton**		

- The above specifications are subject to change without prior notice for the quality

4. Construction & Main Parts

4.1 Inner Valve Type

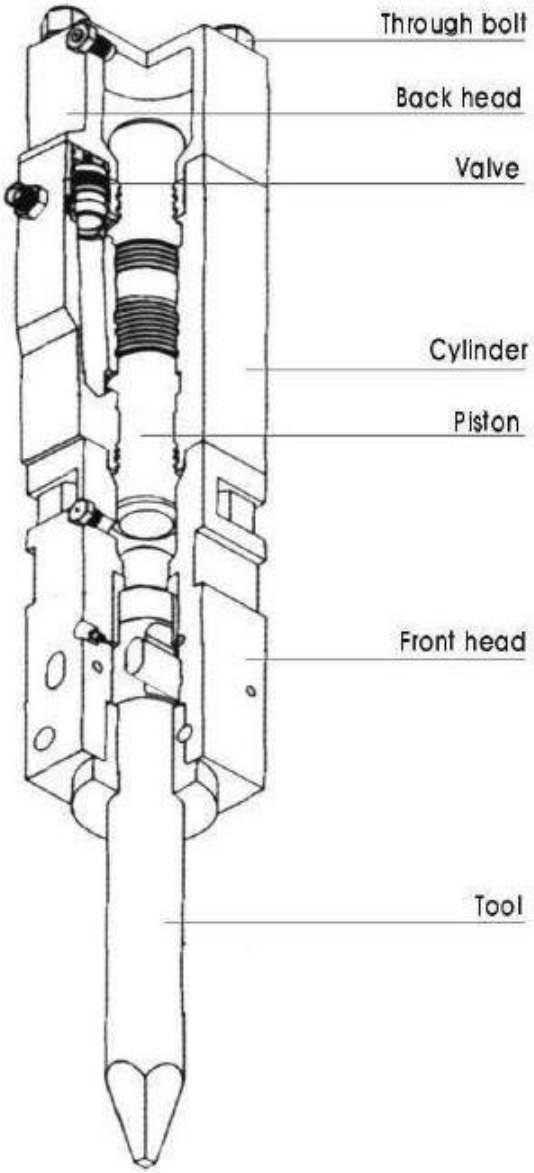

◆ Through bolt

Front head, cylinder and back head of breaker body are tightly fixed with four through bolts.

◆ Back head

This contains the cushion chamber charged with nitrogen(N2) gas that compresses during upward strokes of the piston, and serves to provide maximum absorption of piston recoil, efficiency storing this energy for the next blow.

◆ Valve

Cylinder control valve is built in the valve housing and controls piston reciprocation.

◆ Cylinder

The cylinder is the heart of the breaker containing hydraulic circuit for piston reciprocation

◆ Piston

Kinetic energy of the piston is converted into hammering energy after hitting the tool. The hammering energy transmitted to the tool breaks rocks

◆ Front head

The front head supports the whole breaker. Upper bushing prevents shock from the tool

◆ Tool

This transfers piston impact power to the objects.
We recommend that various tool shapes according to working circumstance.

5. Hammer Tools

5.1 Selection of tools

We can offer the selection of standard and special tools to suit each Application.

The correct type of the tool must be selected to get the best possible working Result and the longest life time for tool.

5.2 Tool Replacement

1) Remove the stop pin and the tool pin with a 330mm-long steel bar.

   When reassembling, align the groove in the tool and the tool pin hole and insert the tool pins.

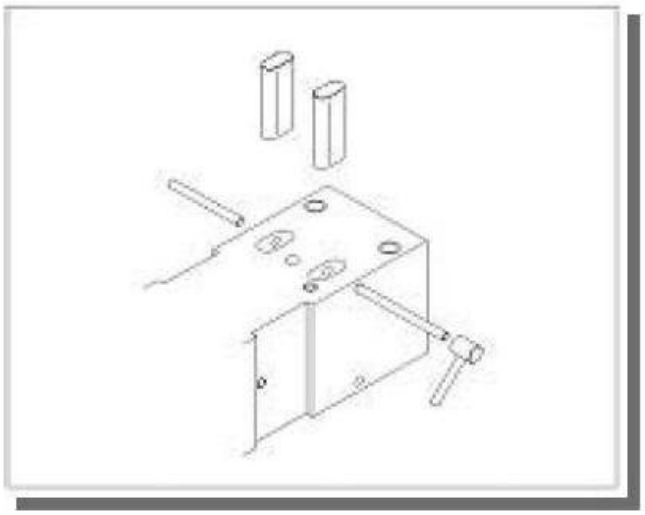

2) Reverse disassembly procedures to install a replacement too.
   - Before installing a new tool, check each part for wear, breakage, scores, etc.
   - Remove burrs and swellings on each tool pin, apply a coat of grease to the movable areas of the tool pin and the tool and finally install the tool.
   - Excessively deformed the tool pins will make replacement of the tool difficult. The tool pins must be checked every 100 to 150 hours of operation.

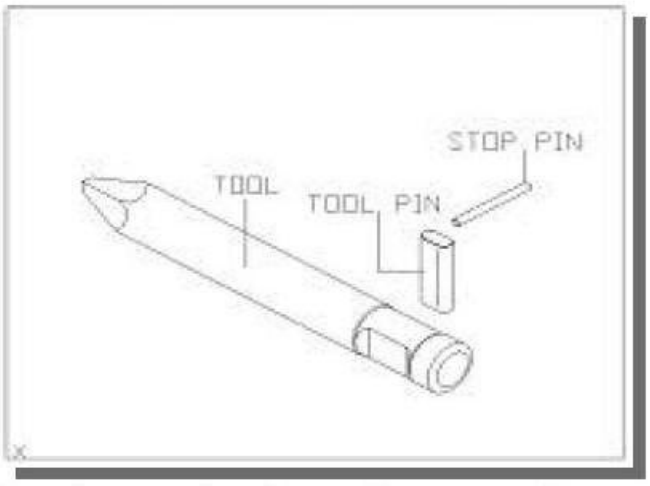

- If the replacement tool is not a genuine part, we do not guarantee the performance of other parts of the breaker.

5.3 Cause of tool failure

◈ External Forces

The main cause of increased fatigue stress in a tool is any form of side force that creates bending during operation. Therefore, using the tool to pry, using the incorrect working angle, or attempting to break ground using the pull of the machine, are detrimental to the life of a tool and must be avoided.

The hydraulic power available in a carrier far exceeds the strength of a tool, and if being used incorrectly, can "snap a tool like a twig".

Blank - Firing

This is any situation where the hammer piston strikes the top of the tool, but the working end of the tool is not in contact with the work. This includes when the tool slides off the work, and also on a break-through of thin concrete slabs or boulders.

Cold Temperatures

Low temperatures cause the tool to be more susceptible to fatigue failure.
Tools should be warmed before extensive use by moderate or light breaking.

Mechanical and Thermal Damage

Any form of damage to the surface of a tool renders it more liable to suffer fatigue failure.
Care must be taken to prevent scratches, gouges, weld marks on the tool, or pick up between the tool and tool bushing due to lack of lubrication or excessive bending.

Poor Lubrication

Metal-to-metal contact causing pick up could cause deep damage marks which, in turn, lead to the formation of fatigue cracks and eventual failure of the tool.
Ensure that the tool shank is well lubricated before inserting it into the tool holder.
Molybdenum disulfide grease is recommended for the application at two-hour intervals, with the tool pushed fully up inside the hammer.

Corrosion

Keep tools well-greased and sheltered from the weather when not in use.
A rusty tool is more likely to suffer fatigue failure

5.4 Greasing

1) Manual Greasing System

⚠ WARNING

- **Insufficient greasing may cause abnormal wear of front cover and tool, and tool breakage**

Apply grease to grease nipple on front head every 3 hours.
Adapt grease interval and amounts to tool wear rates
and working conditions.

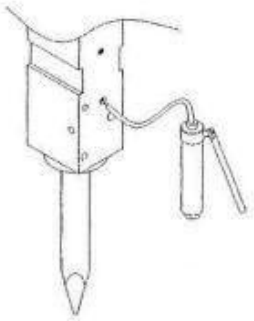

⚠ NOTICE

- **Tool shank must be well lubricated before installed in front head**
- **While greasing, hydraulic breaker must be upright against the tool, To ensure that grease will penetrate between tool and inner bush.**

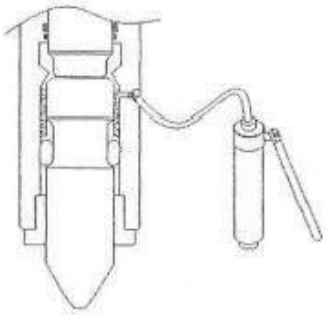

○ STANDING UP

Recommended Lubricant Greases(NIGI No.2)

MAKER	GREASE
Esso	Beacon Q2
Shell	Retinax AM
Mobil 1	Mobil 1 Grease special

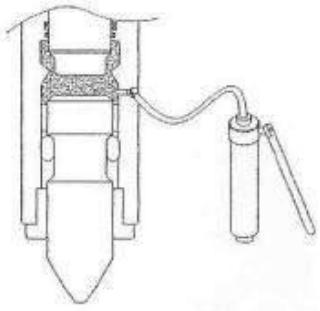

× DOWN

Pressing the tool up inside the breaker prevents excessive grease entering the impact chamber. The excessive grease will cause a cushioning affect and a lack of breaker power when the breaker is fired.

Excessive grease could contaminate the oil and cause seal failure.

1) The breaker must be in a vertical position to grease, with enough down-pressure to push the tool up inside the housing.

2) Grease until clean grease oozes out around the tool and retainer pins.

3) Grease the breaker after every two hours of continuous use, or when the tool appears shiny where it rides inside the front head.

▲CAUTION!
Grease often. Failure to lubricate regularly reduces the life of the tool, bushings, and front head. If the tool becomes dry and shiny during the shift, apply additional grease.

6. Preparation for Installation & Operation

6.1 Hydraulic pipe lines for exclusive use.

Operation of the hydraulic breaker requires installation of hydraulic pipe lines for exclusive use of the hydraulic breaker.

As hydraulic pipe lines vary depending on base machines, the service engineer must first check hydraulic pressure, oil capacity, pressure loss and other conditions of the base machine before installing hydraulic pipe lines. Use only genuine parts In case of replacement because hydraulic pipe lines (hoses, pipes and fittings) are made of materials carefully selected in consideration of durability.

⚠ WARNING

- **THE HYDRAULIC SYSTEM TO THE BASE MACHINE MUST BE CHECKED BY AN AUTHORIZED SERVICE ENGINEER BEFORE FIRST USE AND AFTER ANY MODIFICATIONS.**

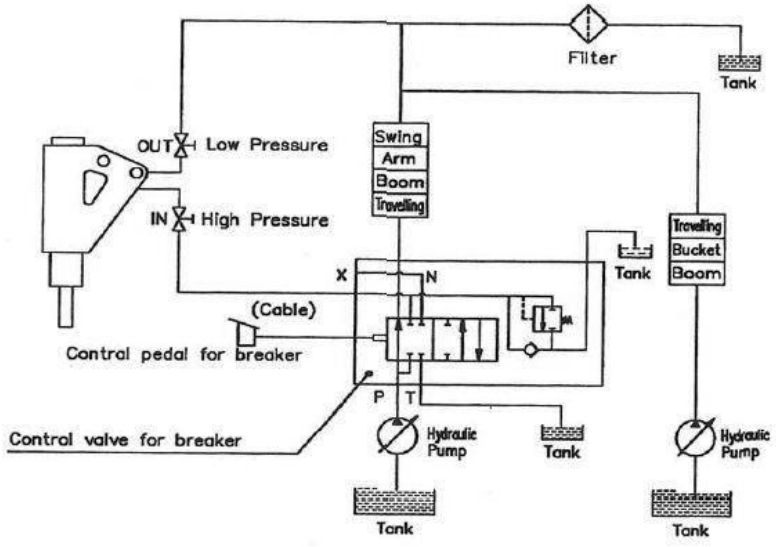

⚠ WARNING

- **MAKE SURE THAT THE BREAKER VALVE OF THE HYDRAULIC SYSTEM IS PROPERLY.**

6.2 General view of breaker installed

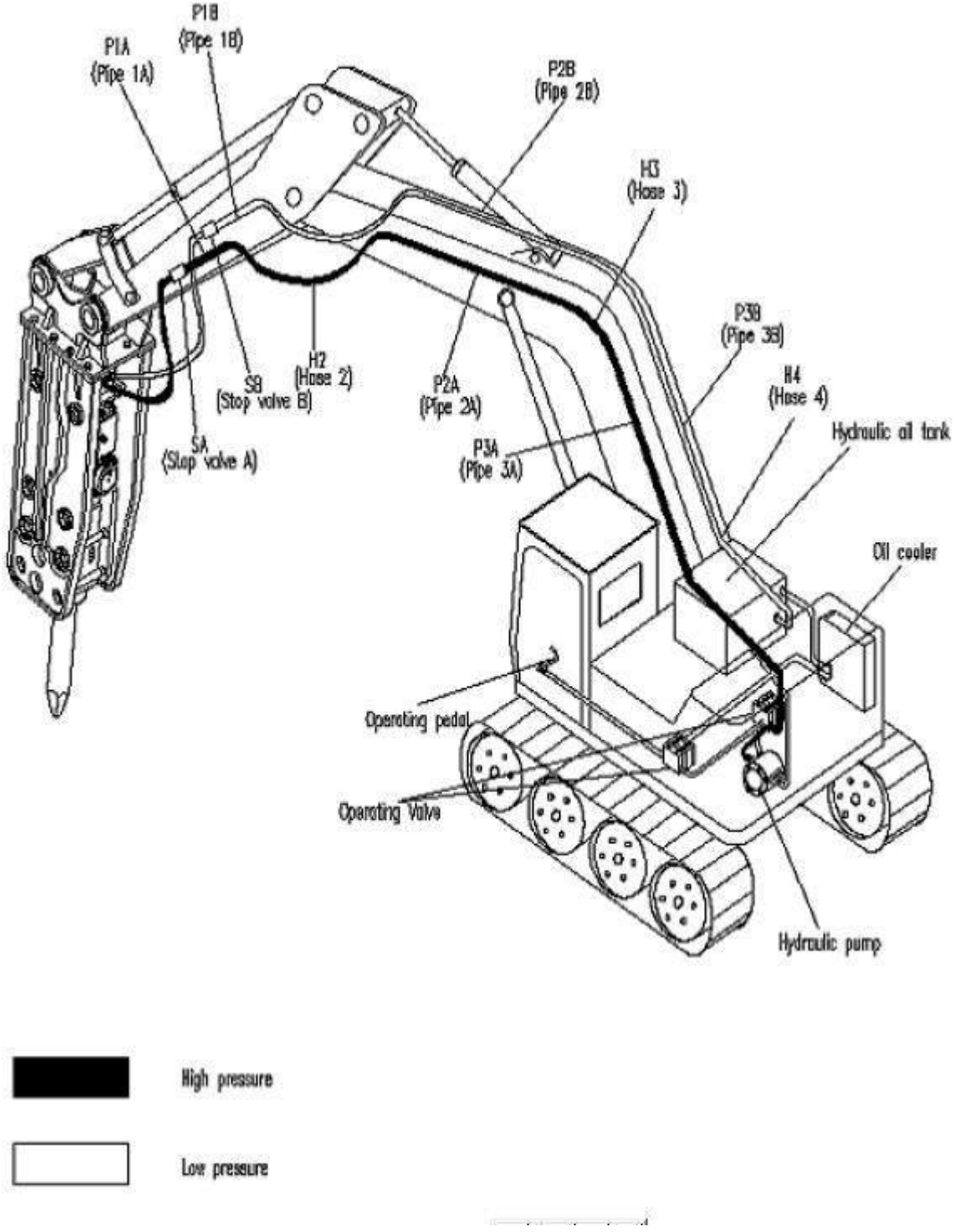

7. Operation (Breaking)

7.1 Principle of breaking

※ There are basically two ways of breaking with a Gas-type breaker.

1) Penetrative (or cutting) breaking

In this form of breaking the cone point or chisel tool is forced inside the material. This method is most effective in soft, layered or plastic, low abrasive material.

2) Impact breaking

In impact breaking, material is broken by transferring very strong material stress from the tool into material to be broken. Best possible energy transfer between the tool and object is achieved with a blunt tool.

Impact breaking is most effective in hard, brittle and very abrasive materials.

7.2 Proper position of the Tool

Proper position must be applied for an effective use of hammering force. When position is incorrect, hammering energy of the piston is too weak to break rocks. Instead, hammering force applies shocks to the breaker itself and the arm and boom of the base machine, thereby resulting in damage to those parts.

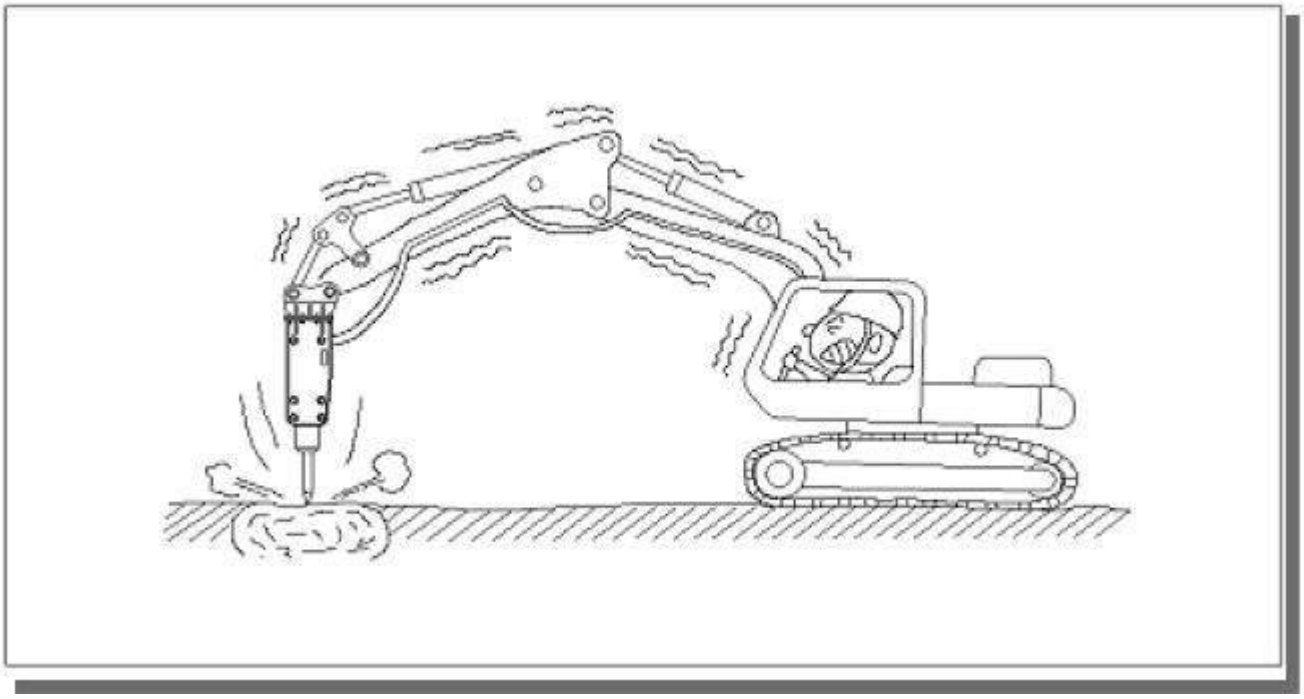

On the contrary, when position is excessive enough to break rocks with the front of the base machine raised, the machine may suddenly tilt forward the moment rocks are broken. Then, the breaker body or the end of bracket may violently hit against rocks and result in damage.

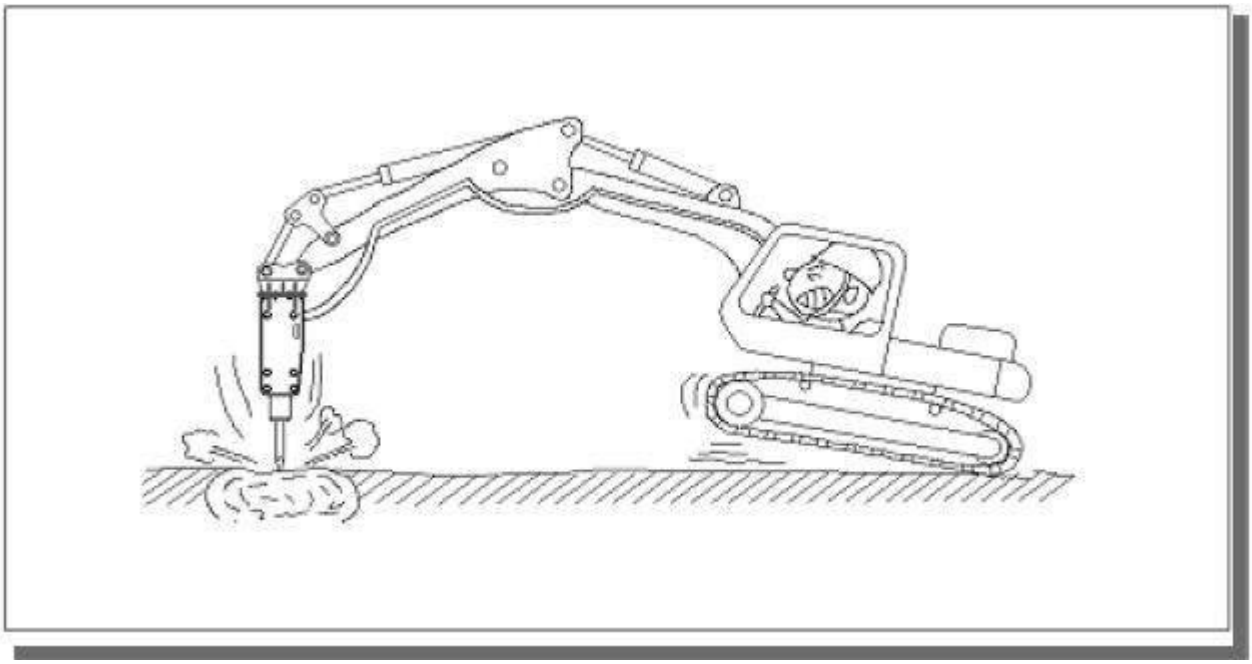

It is undesirable to carry out hammering under the below condition, because vibrations during hammering may be transmitted to the tracks of the base machine. During hammering, however, proper position must be always applied to the breaker. Special care must be taken not to hammer under abnormal condition.

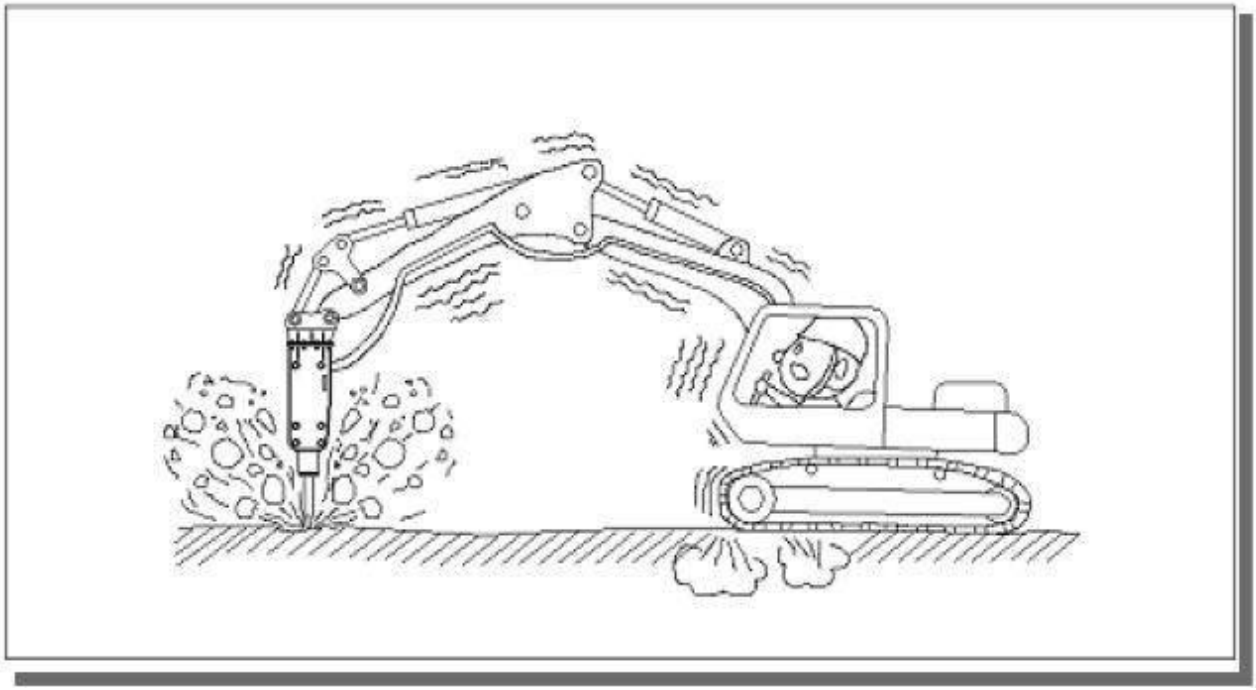

7.3 Alignment of the Tool

Apply same direction of boom force in line with the Tool and place the Tool in the rock with hammering surface as vertical as possible. If hammering surface is oblique, the Tool may slip during hammering. This causes the Tool to seize and to be broken and the piston to be damaged. When breaking, fully stabilize the Tool first and then select the point of a rock on which hammering can be performed in a stable condition.

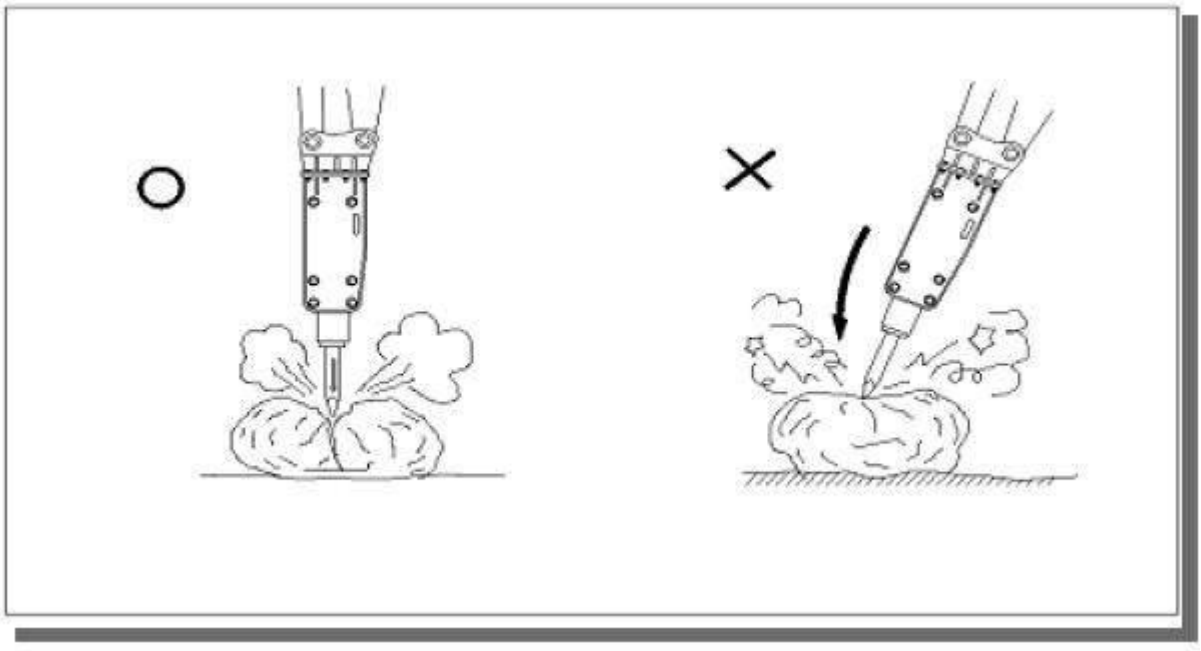

7.4 Operation Precautions

IMPORTANT

- APPLY DOWNWARD FORCE TO THE BOOM UNTIL THE REAR OF THE CARRIER IS RAISED OFF THE GROUND.
- THE BREAKER IS MORE EFFICIENT WHEN ADEQUATE DOWNWARD FORCE IS APPLIED.

IMPORTANT

- RELOCATE THE BREAKER OFTEN
- THE BREAKER TOOL SHOULD BE MOVED TO A NEW LOCATION OF THE WORK EACH TIME THE TOOL PENETRATES BUT DOES NOT CRACK THE MATERIAL.

IMPORTANT

- DO NOT BREAK CONTINUOUSLY IN ONE PLACE
- CONTINUOUS PENETRATION IN THE SAME AREA FOR LENGTHILY PERIODS WILL CREATE EXCESSIVE TEMPERATURES AT THE END OF THE TOOL RESULTING IN LOSS OF TEMPER(HARDNESS) OF THE TOOL AND CAUSING MUSHROOMING OF THE TIP OF THE TOOL, AND MAY LEAD TO FAILURE OF THE BIT.

IMPORTANT

- DO NOT USE THE TOOL AS A LEVER.

IMPORTANT

- DO NOT USE UNDERWATER WITHOUT AIR APPLICATION KIT
- NO PART OF THE **HAMMERS** HYDRAULIC BRAKER SERIES MAY BE SUBMERGED IN WATER WITH IT FIRST ADAPTING THE BREAKER FOR UNDERWATER USE.
- USE OF THE BREAKER UNDERWATER REQUIRES AN UNDERWATER APPLICATION KIT AND AN AIR COMPRESSOR CAPABLE OF PRODUCING 6000LPM/150PSI.

- UNDERWATER USAGE OF THE BREAKER WITHOUT THE UNDERWATER KIT AND AIR COMPRESSOR WILL CAUSE INTERNAL DAMAGE TO THE BREAKER.
- SEE THE "UNDERWATER OPERATION OF THE BREAKER"

IMPORTANT

- BEFORE LEAVING THE CARRIER, ALWAYS LOWER THE BOOM AND INSURE THE CARRIER IS STABLE.
  NEVER LEAVE THE MACHINE WITH THE ENGINE RUNNING.
- ALWAYS ENGAGE THE PARKING BRAKE.

1) Stop operation as soon as hoses vibrate excessively.

Excessive vibration of high and low pressure hoses of the breaker calls for an instant disassembly and repair.
Contact the nearest service station appointed by **HAMMERS**.

For caution's sake, check oil leakage at the Back-Head.

- The operator is required to pay attention to following points during operation.

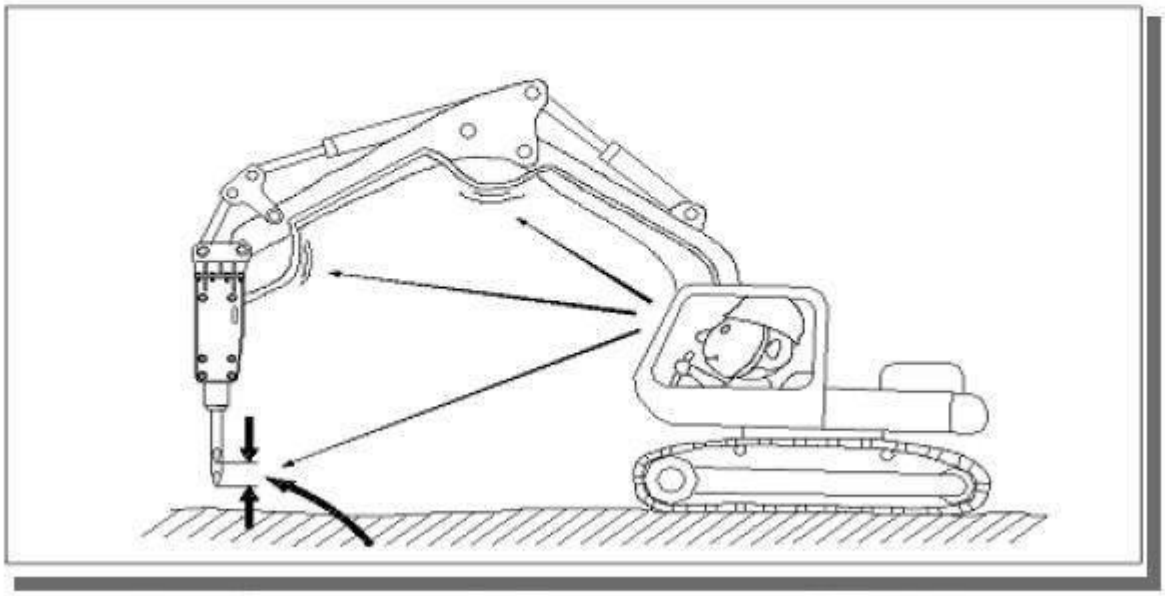

Visually inspect whether there is a surplus of the Tool when the breaker is lifted.

2) Avoid all blank hammering.

As soon as rocks are broken, stop hammering.

Continuous blank hammering will not only damage front head and loosen and break bolts, but also adversely affect base machine.

Blank hammering occurs when proper position of the Tool is not applied to the breaker or the Tool is used as a lever. (Hammering sound changes during blank hammering.)

3) Do not move rocks.

Avoid moving rocks with the side of the bracket, because it is the major factor to breaking bolts installed on the bracket and to damage of the Tool, the boom and arm.

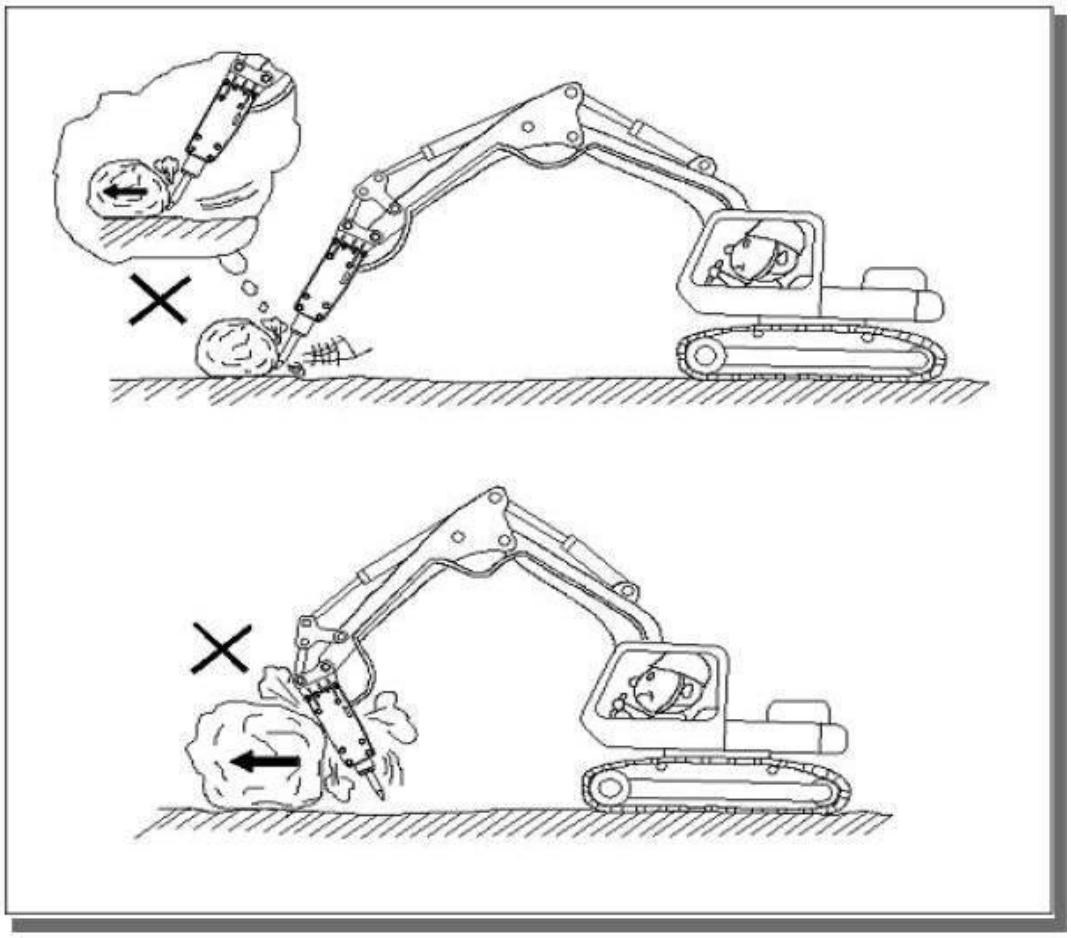

4) Do not use the Tool as a lever.

If breaking rocks by using the Tool as a lever, the bolts and the Tool may break.

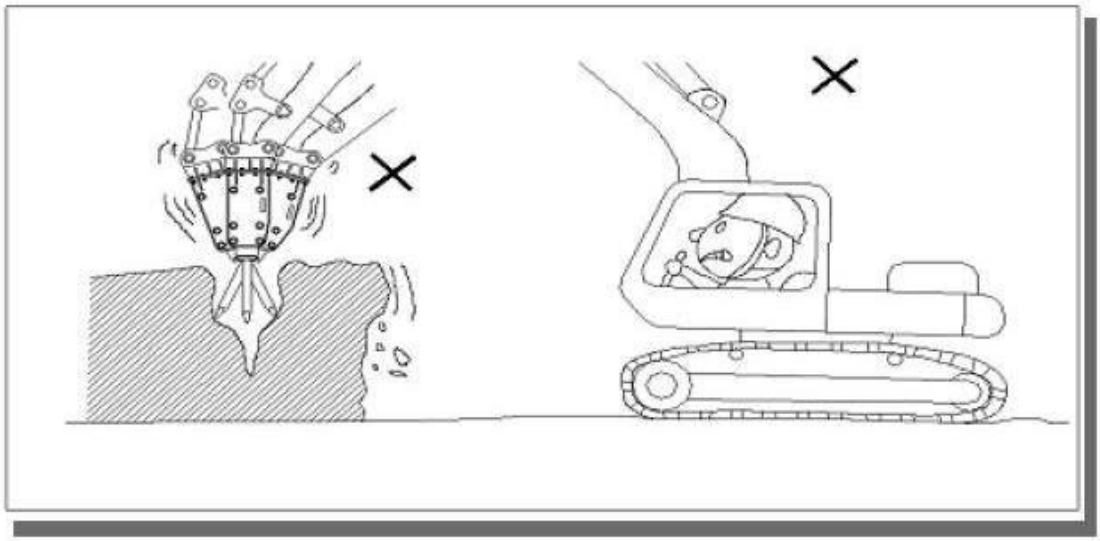

5) Do not continue to hammer for more than one minutes

When rocks are not broken after more than one minute of hammering at the same point, change the place to be hammered. Extended hammering at the same place causes the Tool to wear out excessively.

6) On a hard and large rock, start breaking at an edge.

Even a hard and big rock can be relatively easily broken when hammering begins at a crack or an edge.

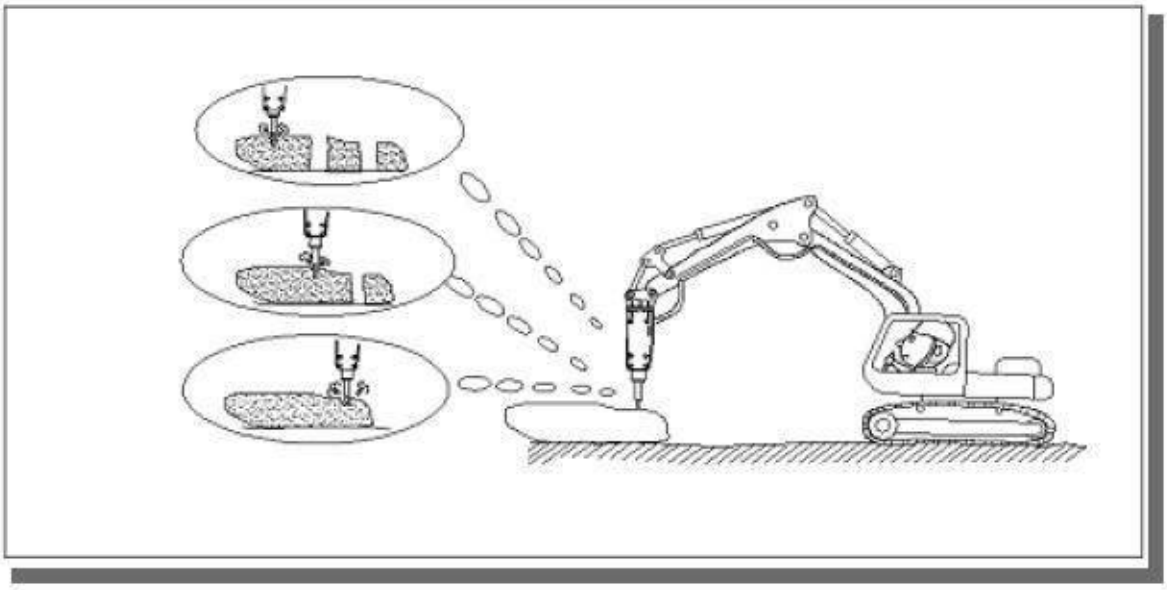

7) Operate the breaker at proper engine speed.

Break rocks at the specified engine speed.

Raising engine speed more than necessary does not strengthen the hammering force but increase oil temperature to the detriment of the pistons and the valves.

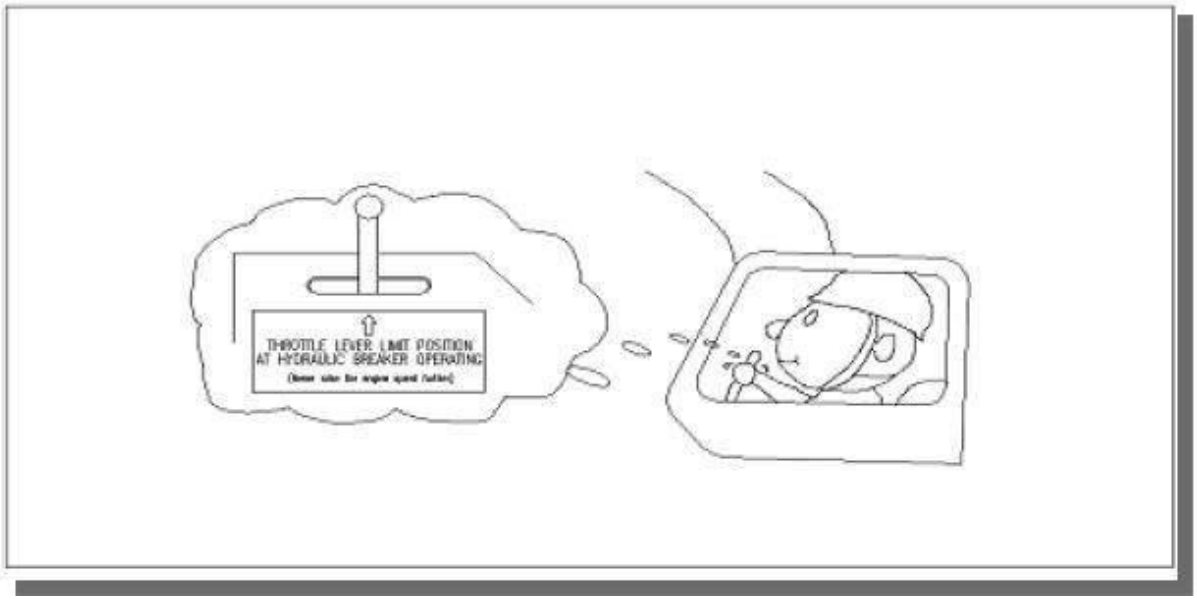

8) Do not operate the breaker in water and mud.

Do not operate the breaker when components (except Tool) are immersed in water and mud.

The piston and similar components may gather rust and become damaged at an early stage.

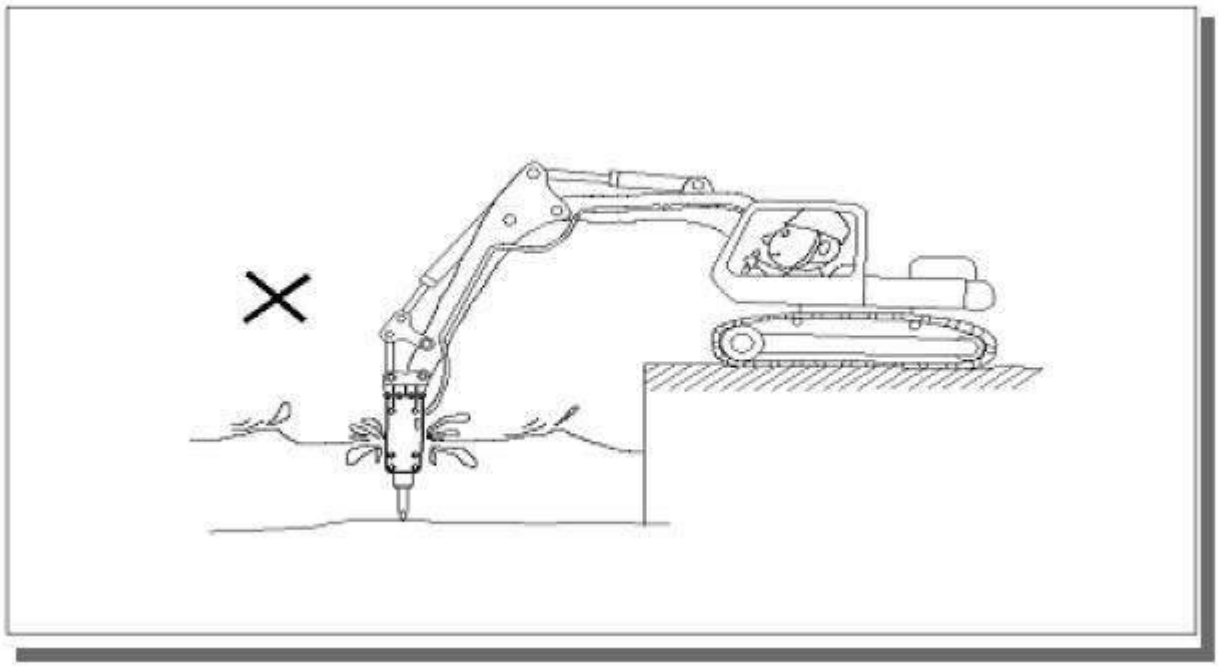

9) Do not allow the breaker to fall to break a rock.

Dropping the breaker onto a rock will apply excessive force to the breaker or the base machine, causing damage to many parts of the breaker and the base machine.

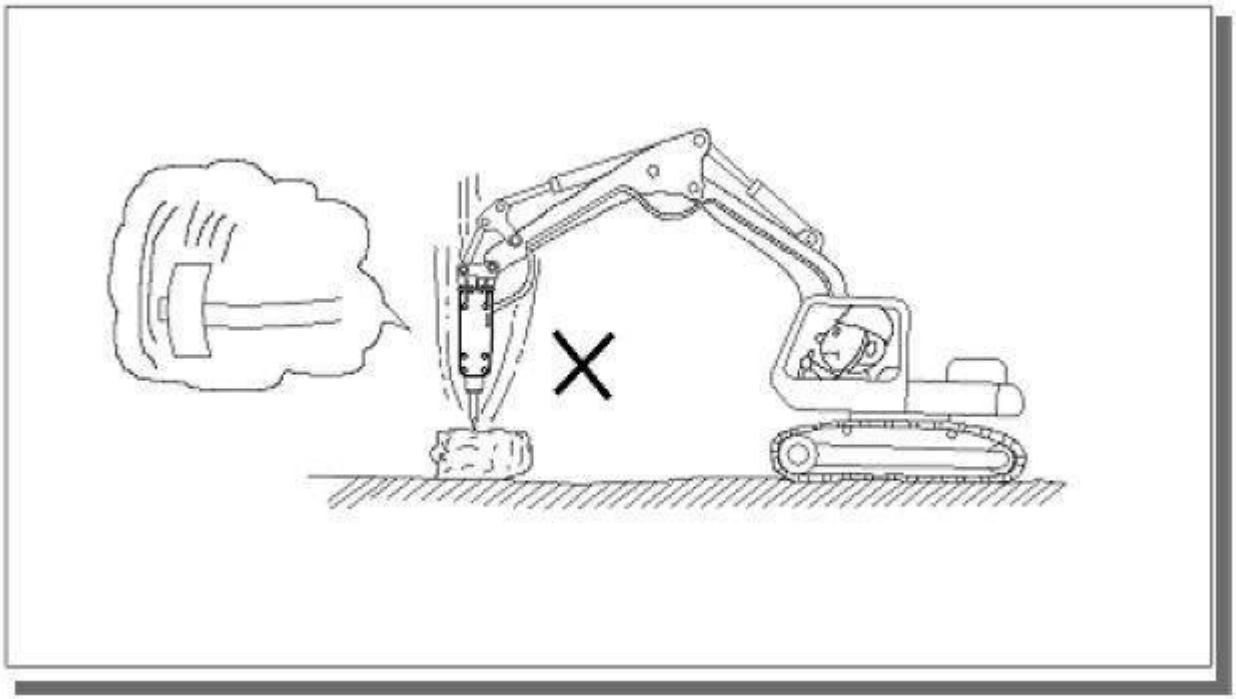

10) Do not the hammer with the base machine cylinder move to stroke end

Hammering with each base machine cylinder moved to it's end stroke (fully extended or retracted) will do considerable damage to the cylinder and each part of the base machine.

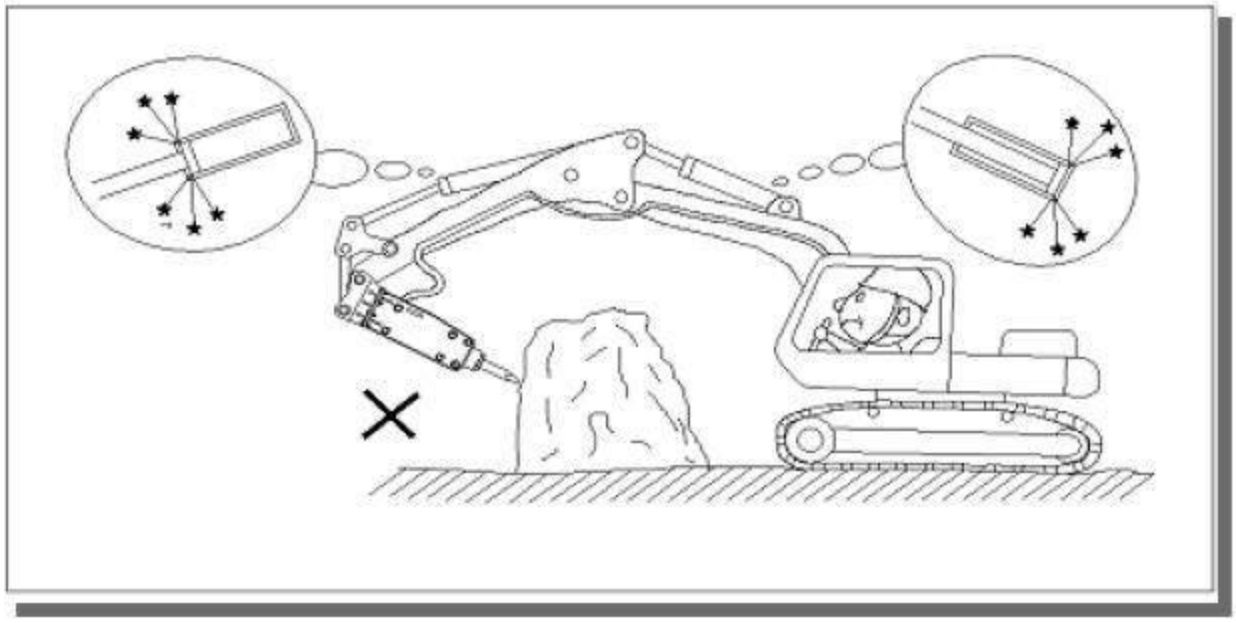

11) Do not lift things with the breaker.

Lifting materials by hanging wire in the bracket or the Tool not only causes damage to the breaker but also is very dangerous when operating.

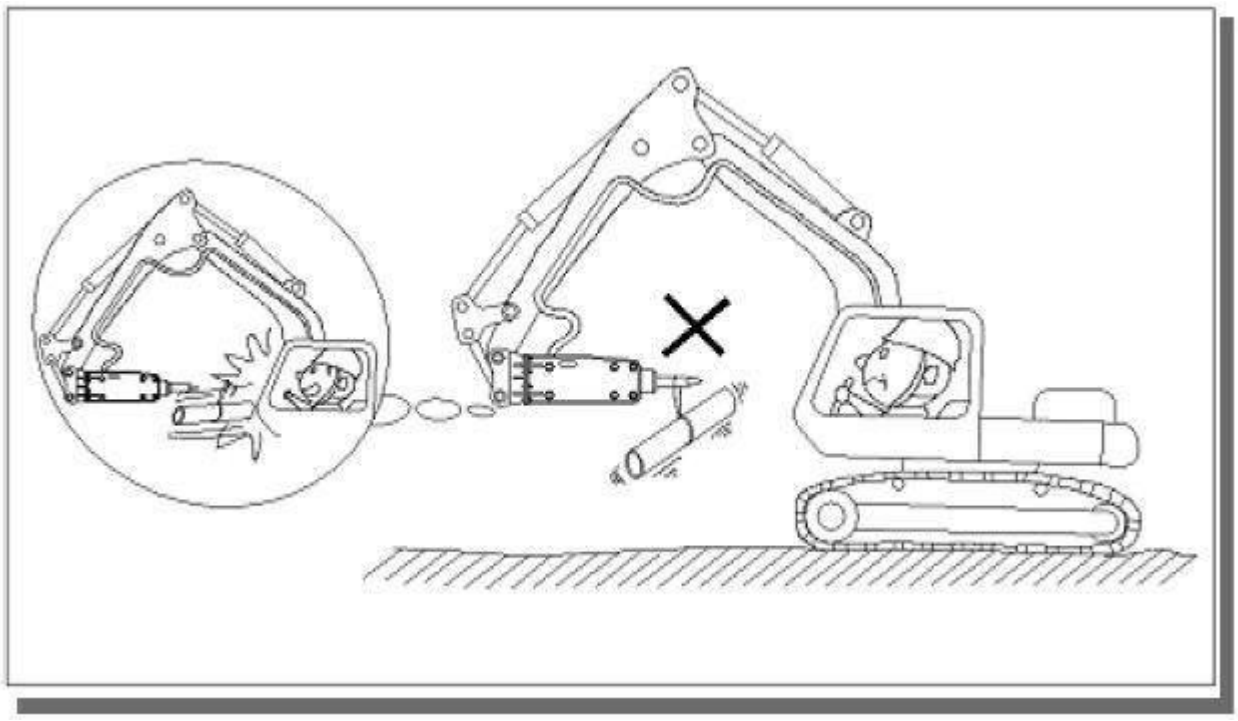

12) Warm up base machine engine Prior to Operation

Especially in winter, the base machine engine should be warmed up for five to ten minutes

(about oil temperature 30℃~40℃/80℉~105℉) before breaker operation.

Follow the Instruction Book for the Base Machine for warming-up of the engine.

13) Do not touch the Tool during hydraulic breaker operation.

During breaker operation, the breaker parts can reach high temperatures.

14) When operating the breaker you must use the ear, eye and breathing protection.

15) Accumulator type danger

Attention! Pressurized container!

Do not open without reading the manual or consulting the authorized service personnel!

16) Greasing danger

With the breaker mounted on the carrier, apply down pressure on the Tool.

And fill cavity with the recommended grease through the marked grease nipple.

17) Always wear the eye protection when removing the stop pin.

Remove the stop pin by doing it in and out with a punch and hammer.

8. Installation and Removal of Hammer

When the bucket and the breaker operation are performed alternately, the bucket and the

Breaker can be easily exchanged by the hydraulic hoses and the two pins.

There is however, a risk of the hydraulic circuit contamination accordingly, install and remove as follows.

1) Move the base machine to stable ground free from mud, dust and dirt.

Stop the engine. Turn off the main switch and deflate air from the oil tank if it is pressurized.

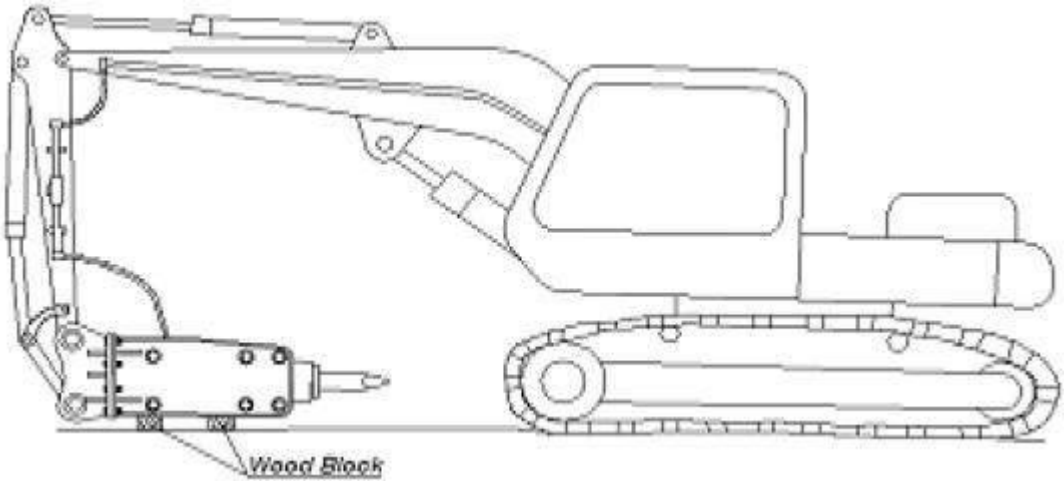

2) Turn the shut off valve (installed to the end of the boom arm) 90 degrees to the "off" position to prevent the hydraulic oil from flowing out.

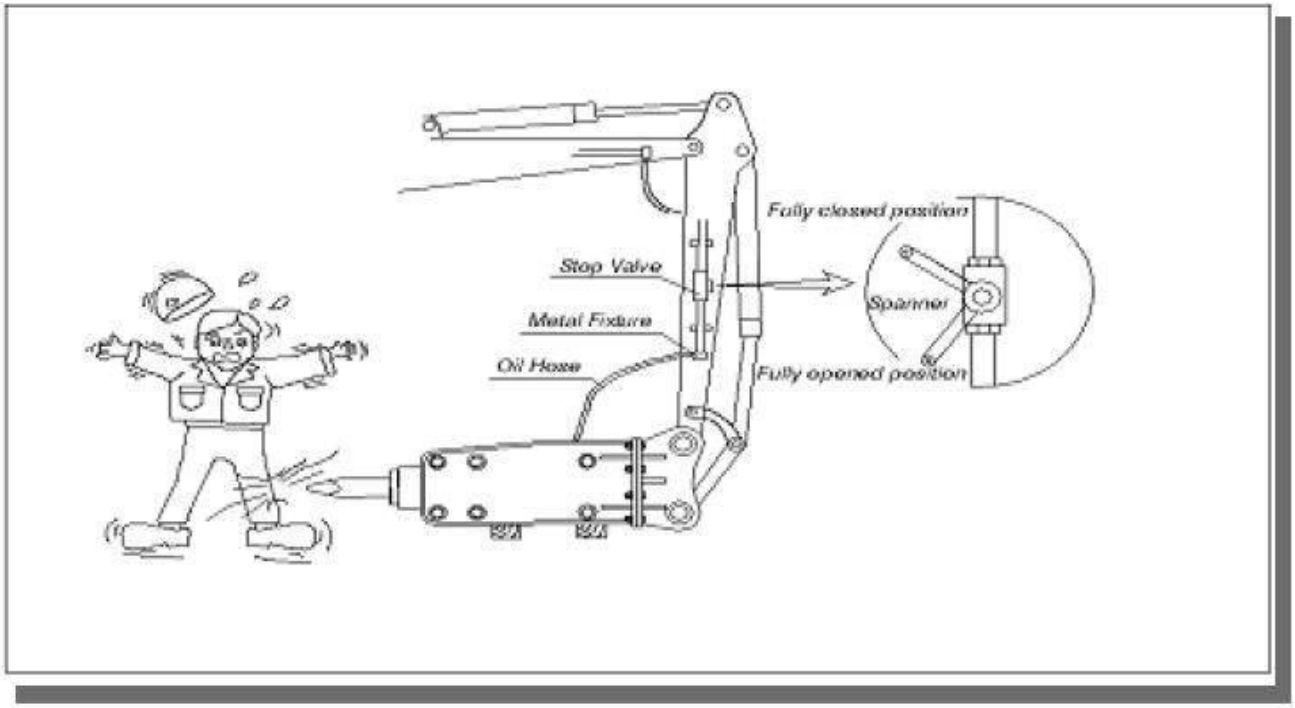

3) Loosen the hose plug on the breaker arm

Collect small amount of oil flowing out at this time and put into a container.

4) Be careful to prevent mud or dust from entering the oil hoses and the pipe lines.

Plug the oil hoses with the hose plug and the pipe lines with the union caps.

Bind the high-and low pressure hoses with a wire to prevent them from getting muddy.

▪ Oil Hose Plug

The Oil hose plug is a stopper aimed at preventing mud or dust from entering the oil hose attached to the hydraulic breaker during the bucket operation.

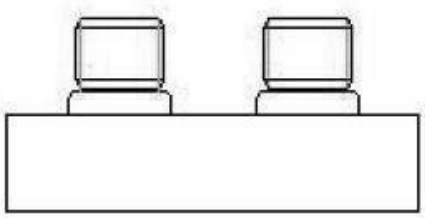

▪ Union Cap

The Union cap prevents mud or dust from entering the pipe lines attached to the machine body.

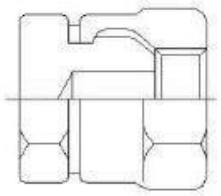

5) To remove the breaker, pull out the pins in the bucket link and the arm.

When leaving the breaker outdoors, set the breaker on wood blocks and cover with sheets.

6) When leaving the breaker removed for a long period

. Clean the exterior of the breaker.

. Remove the Tool from the front head and spray with the rust preventive oil.

. Bleed N2-gas from the Back-Head before pushing the piston into the cylinder.

. Apply the grease to each part of the breaker and then install the Tool again.

7) To install the hydraulic breaker, reverse the aforementioned removal procedures.

The bucket operation easily contaminates the end part of the hoses and the pipe lines.

The contaminated part must be cleaned with no delay.

Hydraulic oil or light oil is highly recommendable.

7.1 Selection of suitable carrier

No.	Description
1	P : Main relief pressure setting of carrier
2	Q : Flow rate of carrier
3	W : Gross weight of carrier
4	C : Standard bucket capacity

7.2 Installation breaker to unsuitable carrier

No.	Description
1	When the breaker is installed to a carrier whose main relief pressure setting (P) is not suitable, it cannot display the breaking ability
2	When the breaker is installed to a carrier whose pump flow rate (Q) is not suitable, the breaking operation cannot be performed under normal breaker spec'
3	When the breaker is installed to a carrier whose gross weight (W) is not suitable, the carrier is heavy and operating force of the arm and boom are great and, thereby, the frame, bracket, tool, etc. of breaker may be damaged
4	When the breaker is installed to a carrier whose standard bucket capacity is not suitable, it is will balanced with the carrier in weight and, thereby, the operating ability lowers and, when the carrier is operated, the breaker becomes unsteady and turn over

7.3 Hydraulic oil level

No.	Description
1	Place carrier in the posture of oil level inspection. Check hydraulic oil level inspection. Check hydraulic oil level with level gage installed to the side of oil tank when oil level is lower than level gage, immediately ask to refill because pump may become defective

7.4 Setting of relief pressure

No.	Description
1	Install a pressure gage and check relief pressure setting. Bleed pressurized air from hydraulic oil tank and install a pressure gage to the pressure inspection port. Close the stop valve installed to breaker high-pressure piping when the breaker hoses are not connected also tighten union cap. Start engine, pull throttle lever fully and depress the pedal to check relief pressure setting.

7.5 Hydraulic breaker piping flushing

No.	Description
1	After connecting breaker pipes, be sure to flush. When pipes are connected, scale or dust may remain within pipes, after connecting pipes, be sure to flush. When setting of relief pressure has been finished open the high pressure and low pressure stop valves fully and depress the pedal to flush the breaker piping. This is done to remove scale, dirt and dust in the piping. Flush for 30~40minutes. After flushing, bleed air from the oil tank, clean the line filter element and remove the drain plug to remove foreign material.

7.6 Installing breaker on carrier

No.	Description
1	The weight of the breaker and carrier must be balanced
2	The oil pressure source (oil pressure and flow rate) sufficient to allow the breaker to fully display the performance must be obtained
3	At least, the boom, arm or bucket cylinder must be able to be operated, as a rule, while the breaker is being operated
4	When the breaker is removed and the original construction machine operations are performed, the original performance of the base machine must be the same as before the breaker is installed
5	The maintenance of the base machine must not be hindered especially

7.7 Control of hydraulic oil Contamination

No.	Description
1	When the hydraulic oil is contaminated, not only the breaker but also the hydraulic components of the carrier operate improperly and, further, the parts may be damaged. - Replace of oil filter : After 50hours initially and every 100hours thereafter - Change of oil : After 250hours initially and every 600hours thereafter

7.8 Troubles caused by contaminated hydraulic oil

No.	Description
1	Many troubles, such as improper breaker operation, improper carrier valve movement and low base machine pump efficiency, are caused by contaminated oil The following are materials which may cause contamination: - Water, silicon (Entry of stone powder) ----- Enters at refilling - Iron, copper, aluminum (Wear on pump or other component), chrome, nickel ----- Due to wear on base machine and breaker

7.9 Control of oil temperature in excessively hot weather

No.	Description
1	When the hydraulic oil temperature excessively rises in hot weather, connect the breaker return piping to the carrier cooler circuit to prevent the oil temperature from rising

7.10 Pump capacity measurement

No.	Description
1	Install a hydraulic tester with hoses to the front end of the arm and measure the oil flow rate in the breaker circuit to check that oil flow rate is as specified This measurement becomes the main data for possible trouble and, further, the performance of a used carrier can be obtained and the time of maintaining the carrier can also be known

Hydraulic breaker maintenance List and point.

Inspection Item	Inspection Point
. Looseness, missing and damage to the bolts and the nuts	. Through Bolts . Bracket Mounting Bolts . Accumulator Bolts
. Looseness of the hose fittings, visible damage to the hoses and oil leakage	. Hydraulic pipes for the breaker . Oil Hoses
. Abnormal oil leakage	. connections of the Back-Head and the Cylinder . Clearance between the Front Head & the Tool
. Abnormal wear and cracks on the Tool	. Tool
. Greasing	. Grease at start and every 2 or 3 hours using the head grease pump . Pumping : 5~10 times
. Hydraulic oil level and contamination	. Conditions of the hydraulic oil
. Missing the rubber plugs and the snap rings	. Rubber Plugs . Snap Rings
. Auto-Greasing kit, looseness, missing and damage	. G-adapter
. Air supply Kit, looseness, missing and damage	. W-adapter
. The Back-Head gas and the Accumulator gas	. Filling the Back-Head gas and the Accumulator

9. Repair & inspection

9.1 Periodic Maintenance (Every 100 hours)

1) Remove the tool and all grease from the chisel holder bushing

Do not use a pressure washer, steam or solvents as they damage the seals.

Chuck for chips or cracks inside the housing and on the bushing surfaces.

Cracks and chips could indicate that :

① Lubrication so insufficient

② Grease type is not appropriate

③ Blank hammering and side loading is occurring and hammer is being operated improperly.

2) Check wear on chisel pin

Examine the shoulders and side surface.

If they are worn or deformed, rotate or replace as required.

3) Check wear on chisel holder bushing

Replace tool, bushing or both where the combined wear exceeds 5mm.

Some bushings are grooved to provide even grease distribution.

Replace the bushings when the grooves are worn through.

Excess bushing wear causes tool misalignment to the piston, causing premature hammer failure.

4) Replace damaged or worn parts

Then wipe all components clean, including the lubrication port.

Hand grease the tool shank and inside the chuck bushings before placing it back into the hammer.

9.2 Daily breaker inspection

Before starting operation, be sure to inspect the breaker referring to the following table.

Inspection Item	Inspection Point	Remedy
Looseness, missing and damage bolts and nuts 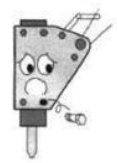	. Through Bolts . Bracket mounting bolts	. Check looseness . Retighten securely.
Loose of hose fittings, visible damage to hoses and oil leakage 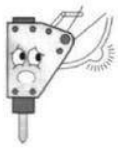	. Hydraulic pipes for the breaker . Oil hoses	. Retighten securely . Replace seriously damaged parts.
Abnormal Oil leakage 	. Connections of Back-head and cylinder . Clearance between front head & Tool	. Consult with **HAMMERS** service station for further inspection.
Abnormal wear and cracks on tool 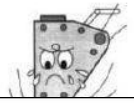	. Tool	. Deformed, burred and worn out tool should be repaired. . Excessively a worn tool needs to be replaced.
Greasing 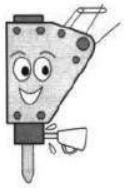	. Grease at start and every 2 or 3 hours using the head grease pump . Pumping : 5~10 times (Greasing position and method shown at left)	. Grease the front head.
Level and Contamination of Hydraulic oil 	. Conditions of the Hydraulic Oil	. Contamination of hydraulic oil varies with operating conditions, but oil color tells the level of contamination . Criteria for judging contamination is specifically set by **HAMMERS**
Missing the rubber plugs and the snap rings 	. Rubber Plugs . Snap Rings	. A seriously damaged one must be replaced.

9.3 Regular breaker inspection & Maintenance

Regular inspection is essential for keeping the hydraulic breaker operating in the best condition.

Consult with the service station for regular inspection and maintenance.

Customers are recommended to contact the local dealer for inspection within six months after delivery.

9.4 Replacement of the Tool

The Tool is deformed by burrs occurring after long-term use. When a Tool tip is worn out,

The Tool is liable to slip. Then, sharpen the Tool tip. Grinding the Tool tip many times to sharpen the edge, but it will make the heat-treated hardened with a new Tool. If the gap between the Tool and the Tool bush becomes large, the piston will fail exactly to hit the upper part of the Tool, resulting in damage. When the gap is found to be over 9mm, replace the Tool bush together with the Tool.

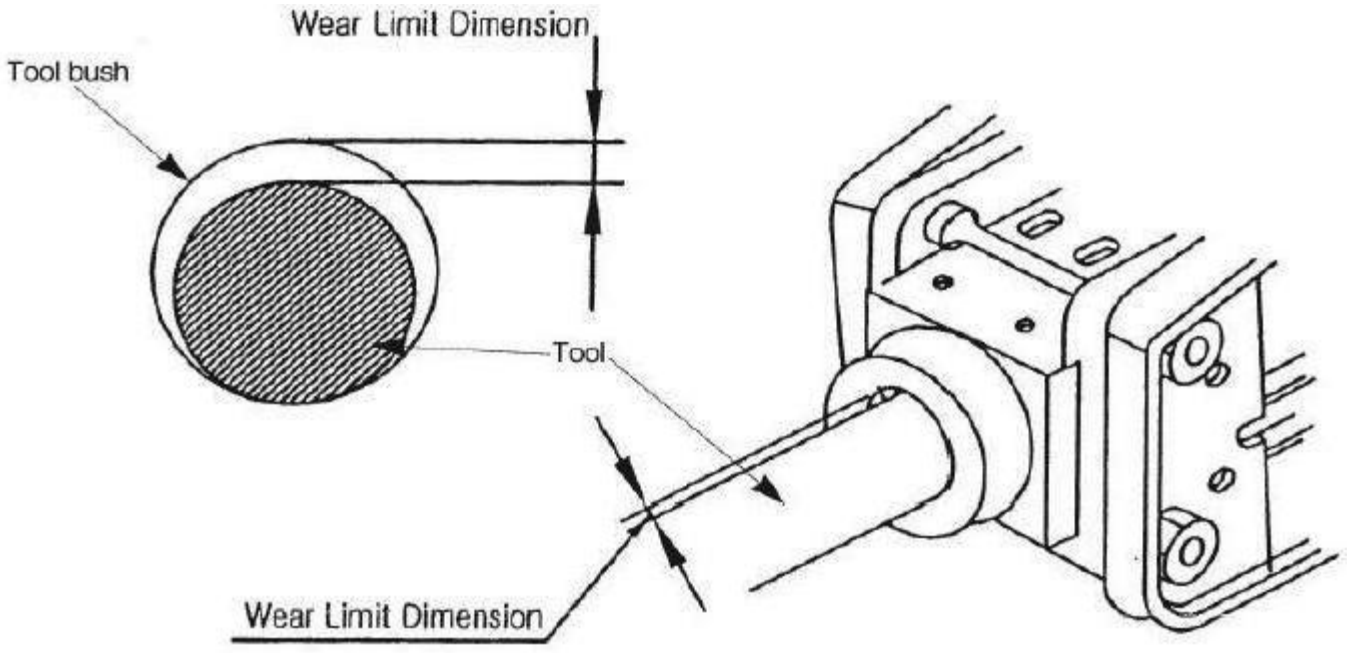

■ Change Timing of the Tool Bush (mm)

Model	Wear Limit(mm)
TMG-HB53S	4
TMG-HB90S	4

9.5 Disassembly & Reassembly of the Breaker

Since the breaker body is manufactured by state-of the art processing techniques and consists of the high-quality hydraulic parts, it is dangerous to disassemble the breaker at a workshop.

Contact your local dealer when disassembly is called for, otherwise quality and performance of the breaker cannot be guaranteed.

9.6 Mounting & Dismounting the Hammer

■ Removal from carrier

1. Position hammer horizontally on the floor and remove the tool.
2. Stop carrier engine.

Operate boom and hammer controls to release pressure trapped inside hoses.

Wait ten minutes for oil pressure to drop.

3. Close hammer inlet and outlet lines.

If quick couplers are used, disconnection automatically closes hammer lines.

4. Disconnect hoses.

Plug the hoses and the hammer inlet and outlet ports.

5. Remove bucket pins and other parts.
6. The carrier can be moved aside.

■ Installation

1. Install hammer in the same manner as mounting a bucket.

Install bucket pins.

2. Connect hoses.

Hammer inlet port in marked on the back head with "IN" and outlet port with "OUT".

3. Open hammer inlet and outlet lines.

9. Inspection and Charging

Nitrogen(N2) Gas at the Back-Head

⚠ WARNING

- CHARGING GAS PRESSURE CHANGES ACCORDING TO THE TOOL CONDITION. LAY DOWN THE BREAKER AND LET THE TOOL EXTEND FULLY.
- STAY CLEAR OF THE TOOL WHILE CHARGING THE BREAKER WITH GAS. THE TOOL MAY BE IMPACTED BY THE PISTON AND FORCED OUT ABRUPTLY.
- WHEN THE THROUGH BOLTS ARE CHANGED THE N_2 GAS MUST BE DISCHARGED WITH THE BACK HEAD, AS IT IS HIGHLY PRESSURIZED.
- USE NITROGEN GAS ONLY.
- SEE " CONVERSION TABLE FOR CHARGING N_2 GAS PRESSURE TO THE BACK HEAD "

9.1 N2-Gas Charging Tools to the Back-Head

① N2-Gas Cylinder ② Adaptor Nut ③ Adaptor ④ Hose ⑤ Gas Charging Kit

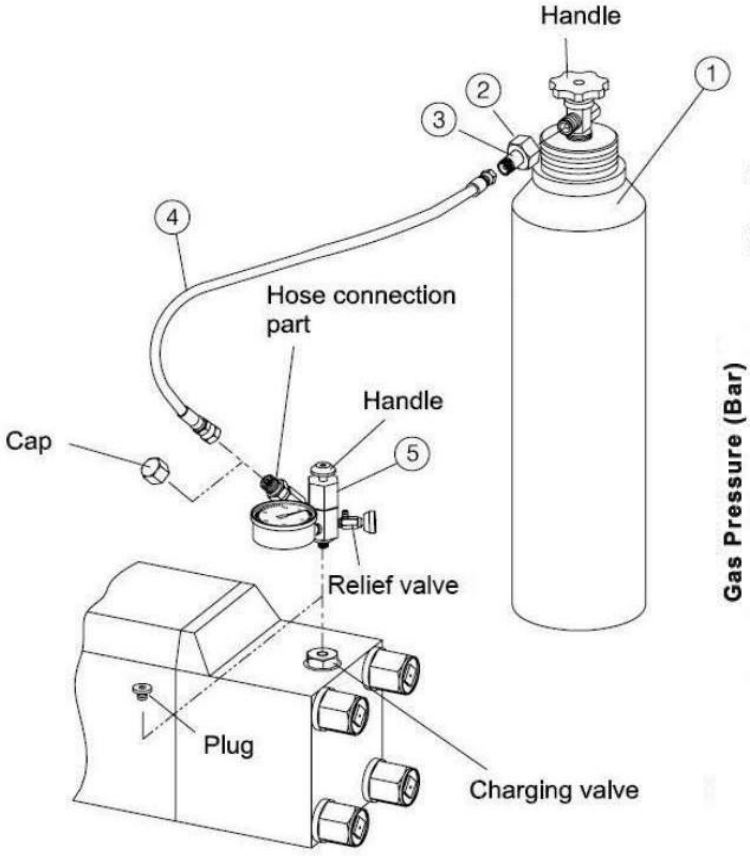

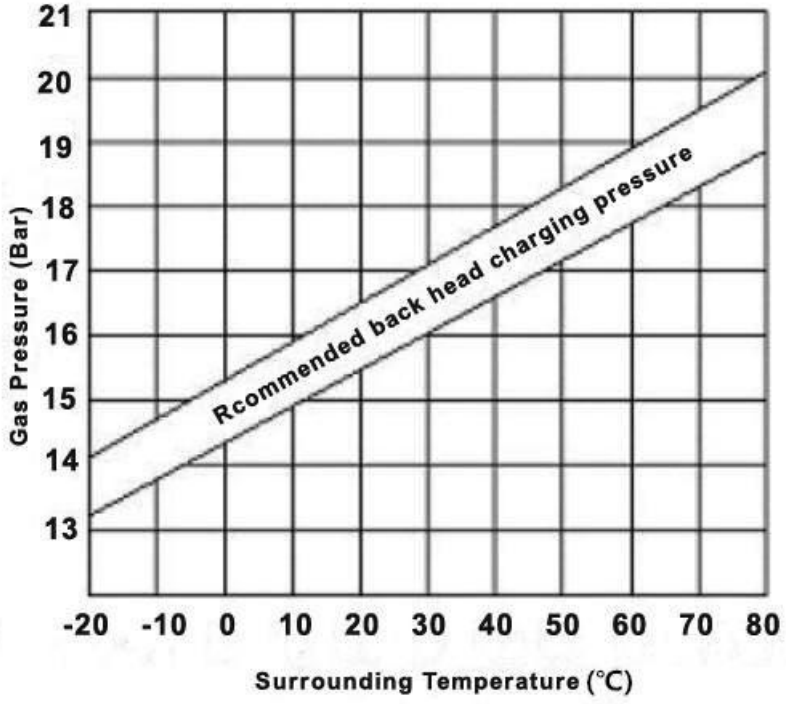

9.2 Inspection of N2-Gas in the Back-Head

1) Make sure that the cap and the valve of the gas charging kit(⑤) are fully tightened. Screw the gas charging kit(⑤) into the charging valve of the Back-Head after removing the plug.

2) At this time the handle must be short to prevent the gas from coming out.

3) Push the handle into the charging valve fully, so the gas pressure inside the Back-Head is indicated on the pressure gauge.

4) If the gas pressure is normal, unscrew the gas charging kit after discharging gas inside the gas charging kit. Reinsert the plug to the breaker.

5) If the gas pressure is higher or lower, charge it as described below.

■ Charging of N2-Gas into the Back-Head

1) Connect the charging hose(④) to N2-gas cylinder(①) after screwing the bomb adapter (④) onto adapter nut(②) and installing than to the N2-gas cylinder.

2) Connect the gas charging kit(⑤) to the charging hose(④) after unscrewing the cap on the gas charging kit.

3) Install the gas charging kit(⑤) to the charging valve of the Back-Head. At this time the handle of the gas charging kit must be up position to prevent the gas from coming out.

4) Push the handle of the gas charging kit fully and turn the handle of the N2-gas cylinder counter clockwise gradually to charge the Back-Head.

5) When the gas pressure exceeds 10% higher then the specified pressure, close the N_2-gas cylinder by turning the handle clockwise.

6) Leave the handle of gas charging kit up. generated pressure makes, it return back to original position naturally.

7) Remove the charging hose(④) from the N2-gas cylinder(①) and the gas charging kit(⑤), and the screw the cap onto the gas charging kit.

8) Push the handle of the gas charging kit fully, and the gas pressure inside the Back-Head is indicated on the pressure gauge. When the pressure is higher, discharge a small amount of gas from the Back-Head repeatedly opening and closing the valve and then gas pressure falls to the specified pressure.

9) When the gas pressure reaches to the specified pressure, close the valve and release the handle.

10) Open the valve completely and discharge gas inside the gas charging kit. Remove the gas charging kit from the charging valve of the Back-Head and install the plug to the charging valve.

10 TROUBLE SHOOTING GUIDE

10.1 Problems in operation

If the breaker does not work or blow frequency and blow get worse, check following trouble Shooting.

And then inspect according to the following order.

Symptom	Cause	Required action
No blow out	1.Excessive back head gas pressure 2.Stop valve (s) closed 3. Lack of hydraulic oil 4. Wrong adjustment of pressure reducing valve 5. Faulty hydraulic hose connection 6.Oil back head infection	1.Re-adjust nitrogen gas pressure 2.Open Stop Valve 3. Fill hydraulic oil 4. Re-adjustment valve 5.Tighten or replace 6.Replace back head O-Ring, Or cylinder bush stop seal
Low impact power	1.Line leakage or blockage 2.Clogged tank return line filter 3.Lack of hydraulic oil 4. Hydraulic oil contamination, or heat deterioration 5. Poor main pump performance 6.Back head nitrogen gas low 7.Low flow rate by mis-adjustment of flow control pressure reduction valve 8.Tool out of range for blowing position	1. check lines 2. Wash fitter, or replace 3. Fill hydrualic oil 4. Replace hydraulic oil, rinse tand and release oil inside lines 5.Contact authorized service shop 6.Refill nitrogen gas 7.Re-adjust reduction valve 8.Rush down tool by excavator
Irregular impact	1. Low accumulator gas pressure, of bad accumulator 2. Bad piston or valve sliding surface 3.Piston moves down/up to blank blow hammer chamber	1. Refill nitrogen gas 2. Call an authorized service man. 3.Rush down tool by excavator operation
Bad tool movement	1. Tool diameter incorrect 2. Tool and pin jammed from tool retainer 3.Jammed lower bush and tool 4.Deformed tool and piston contact area	1. Replace tool with genuine replacement parts 2. Smoothen rough surface of tool 3.Smoothen rough surface of lower bush interior 4.Replace tool
Sudden reduction power and pressure Line Vibration	1.Accumulator gas leakage 2.Accumulator diaphragm damage	1.Replace o-ring, or refill nitrogen 2.Replace diaphragm
Oil leakage between front head and tool	1.Cylinder seal worn	1.Replace seal
Gas leakage	1.O-ring damage in related parts	1.Replace relevant o-ring

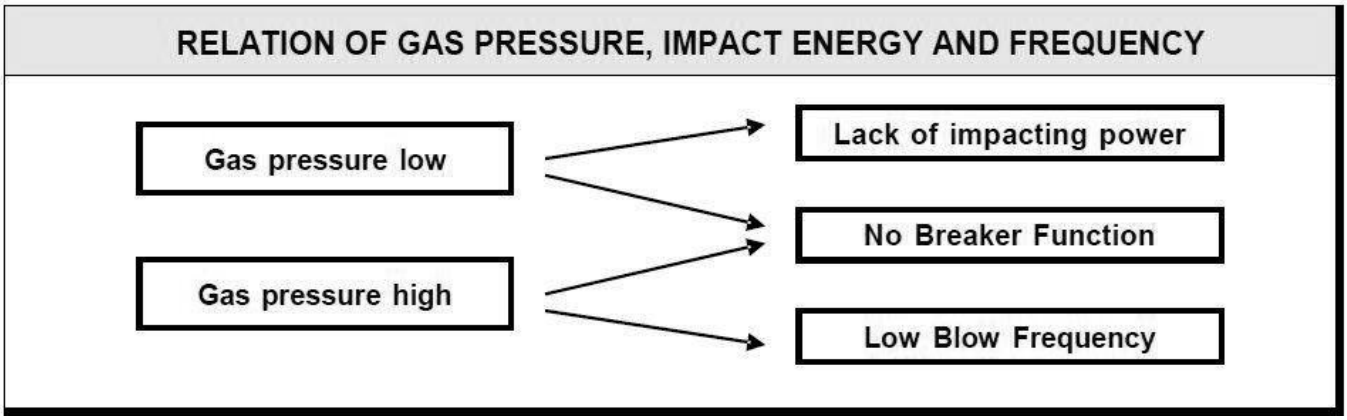

10.2 Gas Leakage

Trouble	Cause	Remedy
Gas leakage from the top of charging valve	• Defective o-ring in charging valve • Defective or damaged in charging valve	• Replace • Repair or replace charging valve
Gas leakage between charging valve and back head	• Defective o-ring in charging valve • Defective valve loose in back head	• Replace • Re-tighten
Gas leakage between Cylinder and back head	• Defective o-ring in back head	• Replace
Gas leakage from drain Plug hole	• Defective gas seal in seal housing • Defective step seal in seal housing • Defective of piston and seal housing	• Replace • Replace • Repair or replace seal housing and piston (When repaired replace packing)

10.3 Oil Leakage

Even if oil is leaking, there is no use to replacing parts at all times check the following points listed in the chart below.

The user can check the (☞) marked points before calling dealer.

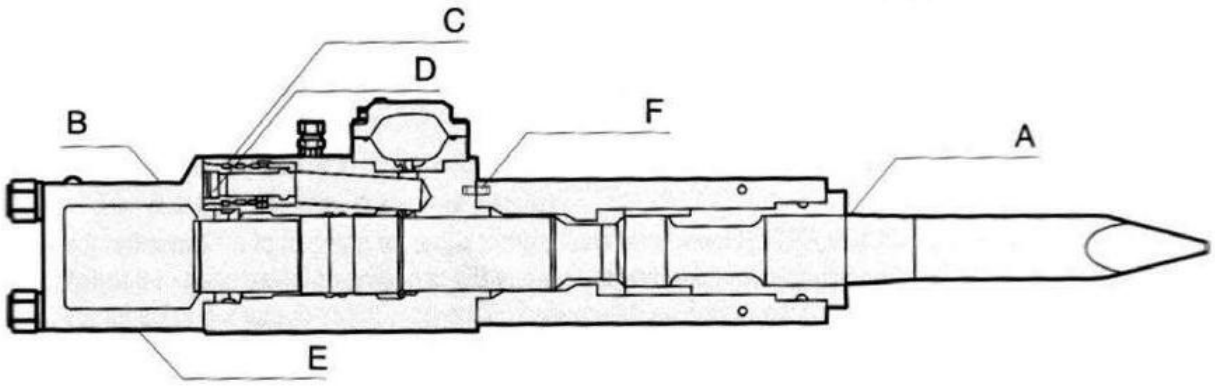

	Area of oil leakage	Condition	Causes & Remedies
A	**Between the tool and lower bush**	• A large amount of oil is leaking • Check if it is coming from oil or grease	Seals cam aged REPLACE
B	**Surface of breaker**	• Oil leaking from the hose & flange adapter portion	☞Loose breaker hoses and bolts RETIGHTEN
C	**Valve housing bolts & cap bolts**	• Oil leaking from reassembly of valve after overhaul	NORMAL : During assembly from lubrication oil & anti-rust oil applied
D	**Between main valve & surface of cylinder**	• Oil leaking from reassembly of valve after overhaul	NORMAL : - Clean oil - Check that seal is damaged - Loosen bolts - Replace withe new seal
E	**Between cylinder and back head**	• Oil leakage	☞Loose tie rod nuts RETIGHTEN
		• Oil leaks again	REPLACE Damaged o-ring
F	**Between cylinder and front head**	• Oil leaking	Loose plugs assembled on the surface of cylinder RETIGHTEN Replace damaged seals

11. Tool Selection

11.1 Guide to tool choice

⚠ WARNING

- The correct choice of the most suitable tool for a certain job is crucial not only in increasing hydraulic breaker productivity, but also for the life of the tool itself.



A B C D

A : Chisel (Wedge) Tool

- Suitable for all kinds of digging or narrow trenching on soft/medium stratified rocks.

B : Moil Point Tool

- Suitable for fine/medium concrete demolition or for soft, non stratified rocks.
- Second mining of soft/medium hard blocks.

C : Blunt Tool

- Suitable for breaking blocks of up to medium hardness or to reduce the size of small blocks.

D : Cone Tool

- Quarrying rock / Cracking concrete & tough rock

11.2 Tool Claim Judgment

Hence, to help use our products correctly, and ensure long operating life, these claim judgment criteria present defect examples that can occur during use, and the disposition standards applicable in each case.

Breakage of Piston impact area or tool pins contact conners

(Fig.1 and 2)

Breakage of piston impacting point or of tool pins contact corners is extremely rare.

This phenomenon occurs or when striking force is being concentrated on the tool corners due to unsatisfactory flatness of piston and tool impacting point.
If such defect occurs, affected tools may not be accepted under warranty.

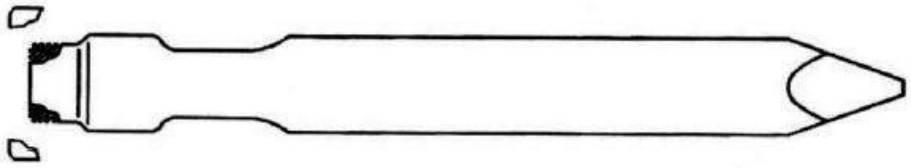

(FIG. 1)

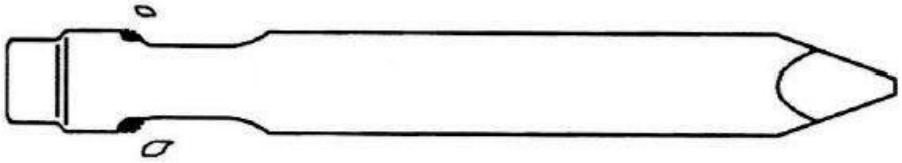

(FIG. 2)

■ Plastic deformation of piston impact area (Fig.3)

The possibility of tool tip plastic deformation occurring due to piston is extremely slim.

Such defects may occur due to material strength deficiency, or brittleness, resulting from unsatisfactory heat-treatment. If such defect occurs, affected products may be accepted under warranty.

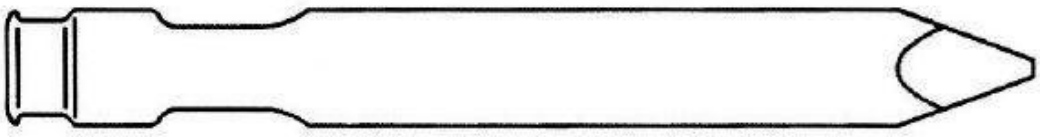

(FIG. 3)

Breakage inside basic Line(Fig.4 and 5)

Should product breakage occur in any direction at a point inside the front cover, as shown in<Fig.5>, from the basic line shown in<Fig.4>, this may be due to defective material, defective heat-treatment : tool deformation, or unsatisfactory shaping of tool neck. Should such defect occur, affected products may be accepted under warranty. In addition to the causes described above, product breakage inside the basic line may also occur if the interval between the front cover and tool widens due to excessive wear Of front cover, coupled with excessive bending load being applied to hydraulic breaker. If any trace of seizure, caused by friction between the front cover and tool, is observed On the surface of the tool body, and if it is clear that product breakage is centered around the area of such seizure, affected products may be rejected under warranty.

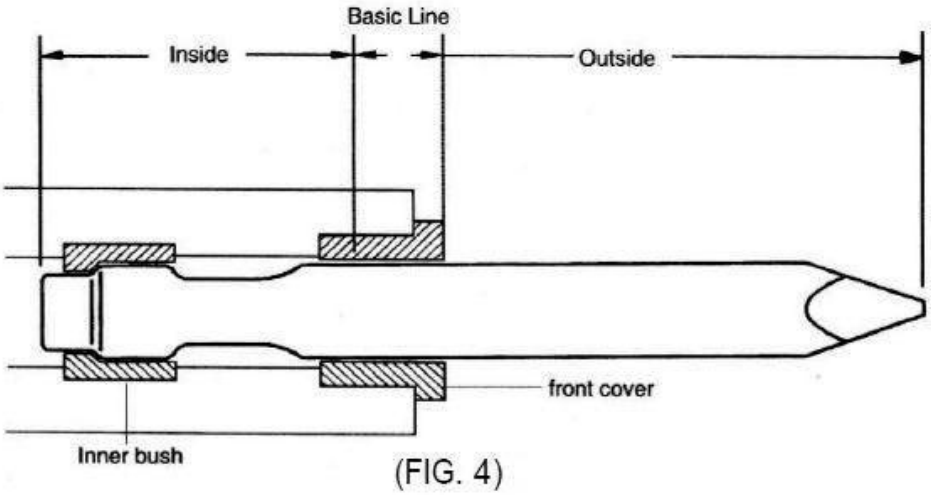

(FIG. 4)

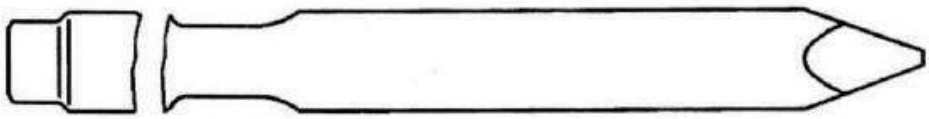

(FIG. 5)

■ Breakage outside basic line (Fig.6,7 and 8)

Should product breakage occur at a point outside the front cover, as shown in <Fig.6>, from the basic line shown in <Fig.4>, this may be due to excessive bending load being applied to the tool. Such bending load occurs when, after tool has been inserted into material, the tool is pulled or pushed, or when the tool is struck and pushed when it is not perfectly perpendicular to the surface of the material being worked on. Fractures, in general, are of the form shown in <Fig.7> Fatigue breakage, of clamshell form, develops in the areas near breakage start points, caused by stress concentration resulting from bending loads, and then quickly radiates outward. Such type of breakage may also occur due to scarring of the tool body during use. As breakage occurring outside the basic line are caused by improper working habits, as explained above, products incurring such defects shall not be accepted under warranty. However, if a fatigue fracture start point occurs within the tool body, instead of on the surface of tool as shown in <Fig.8>, affected products will be accepted under warranty, as such breakage indicates material defect.

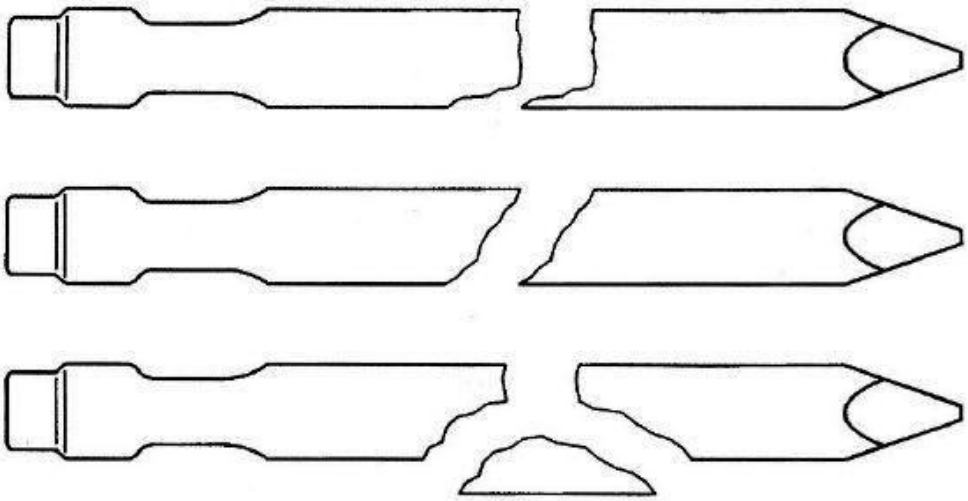

(FIG. 6)

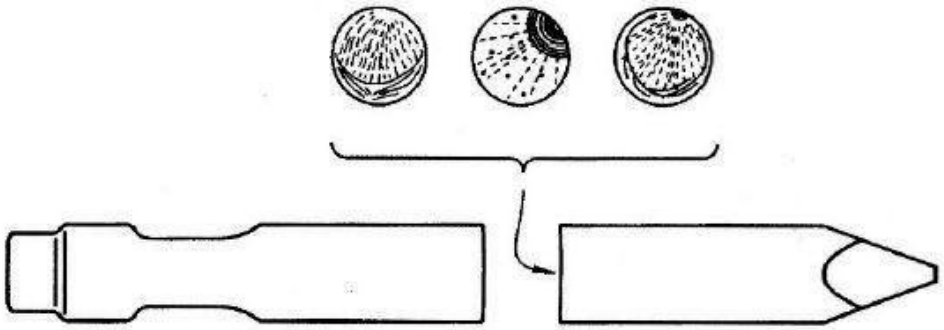

(FIG. 7)

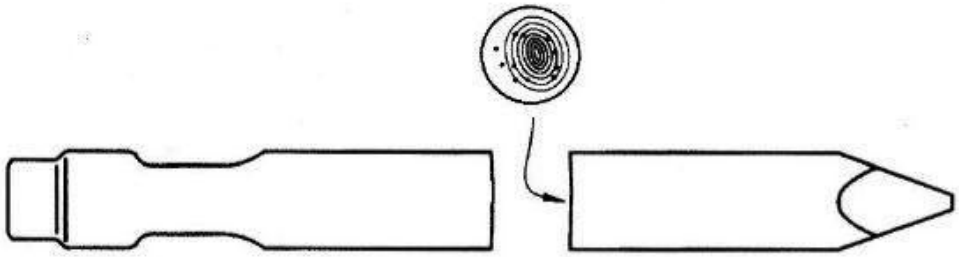

(FIG. 8)

■ Crushing of tool tip (Fig.9)

Breaker tools are heat-treated to exhibit high breakage-and wear-resistance; and defects such as crushing of the tool tip<Fig.9> are not to be expected under normal operating conditions. However, if a tool is hammering continuously for a long period of of time without crushing or puncturing the material being worked on, the temperature of the tip rises extremely high, inducing annealing of the heat-treated material, and bringing on plastic deformation (crushing), rather than wear. As explained above, crushing of the tool tip is caused by improper working methods, and, therefore, affected products will be rejected under warranty.

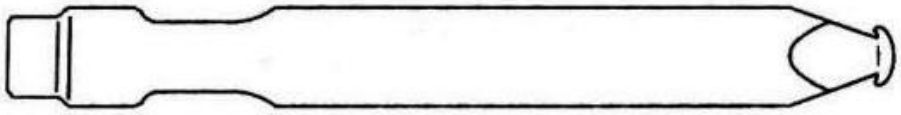

(FIG. 9)

■ Tool tip wear (Fig.10)

The rates and types of tool tip wear vary with work material and work method. If the diameter of the worn tip of a chisel point tool is less than 2/3 of the tool body diameter, as shown in <Fig.10>; and if the tip of a new pointed tool is worn down in excess of 50mm lengthwise from the tip, this is considered normal tool wear. Hence, tools exhibiting such normal wear, as shown in 《Fig.10>, will be rejected Warranty claim.



(FIG. 10)

12. CUSTOMERS' REPORT

12.1 Delivery and Installation Card

This is report is for checking that breaker is correctly delivered and equipped on machine Distributor should correctly draw up this. This is report must be drawn up in typewritten and Informed within 7 days after the date When delivered breaker to customer.

■ Machine

- Maker / Model : Manufacturer and model name of the carrier

- Operating Weight

- Operating Hours : Actual operating hours at time or Date delivered out breaker

- Oil Filter – If there is mark "Y" , if not mark "N"

If there is not it or it's condition is bad, breaker should be troubled easily. Therefore please recommend customer to install it in change new one.

- Others : Performance or Condition of Engine and Hydraulic pump.

■ Breaker

- Model & Serial No : Model name and Serial No. of the breaker

- Operating Pressure : Actual operating pressure

- Relief set Pressure : Actual relief valve setting pressure for breaker

- Operating Oil Flow : Actual required operating flow

- Gas Pressure : Actual pressure in accumulator or gas chamber

MAIN EXPLODED DRAWINGS

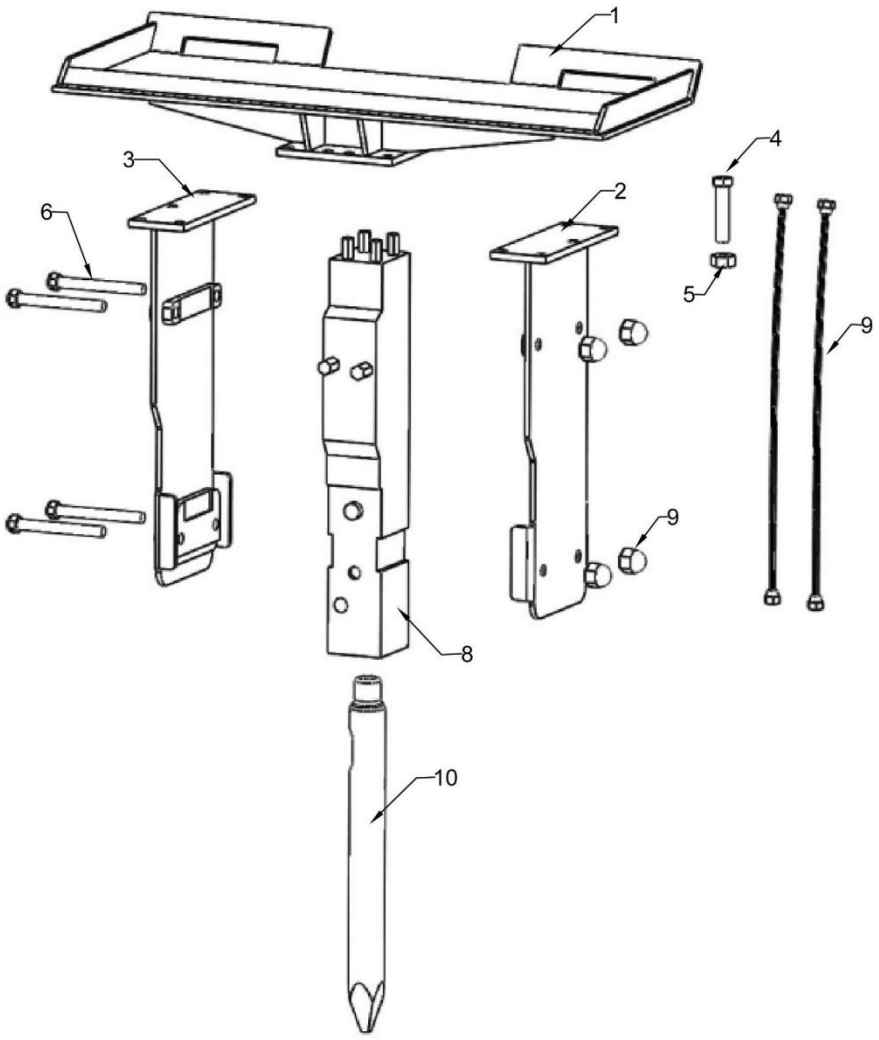

TMG-HB53S Main Parts List

Ref#	Description	Qty	Ref#	Description	Qty
1	Quick connect	1	6	Side bolt M20*190	4
2	Bracket (Rh)	1	7	Nuts	4
3	Bracket(Lh)	1	8	Hydraulic power unit	1
4	Stopper bolt M18*70	10	9	Hoses 1/2inch, 2.4m (NPT)	2
5	Stopper nut	10	10	Moil point chisel	1

HYDRAULIC POWER UNIT

EXPLODED DRAWINGS

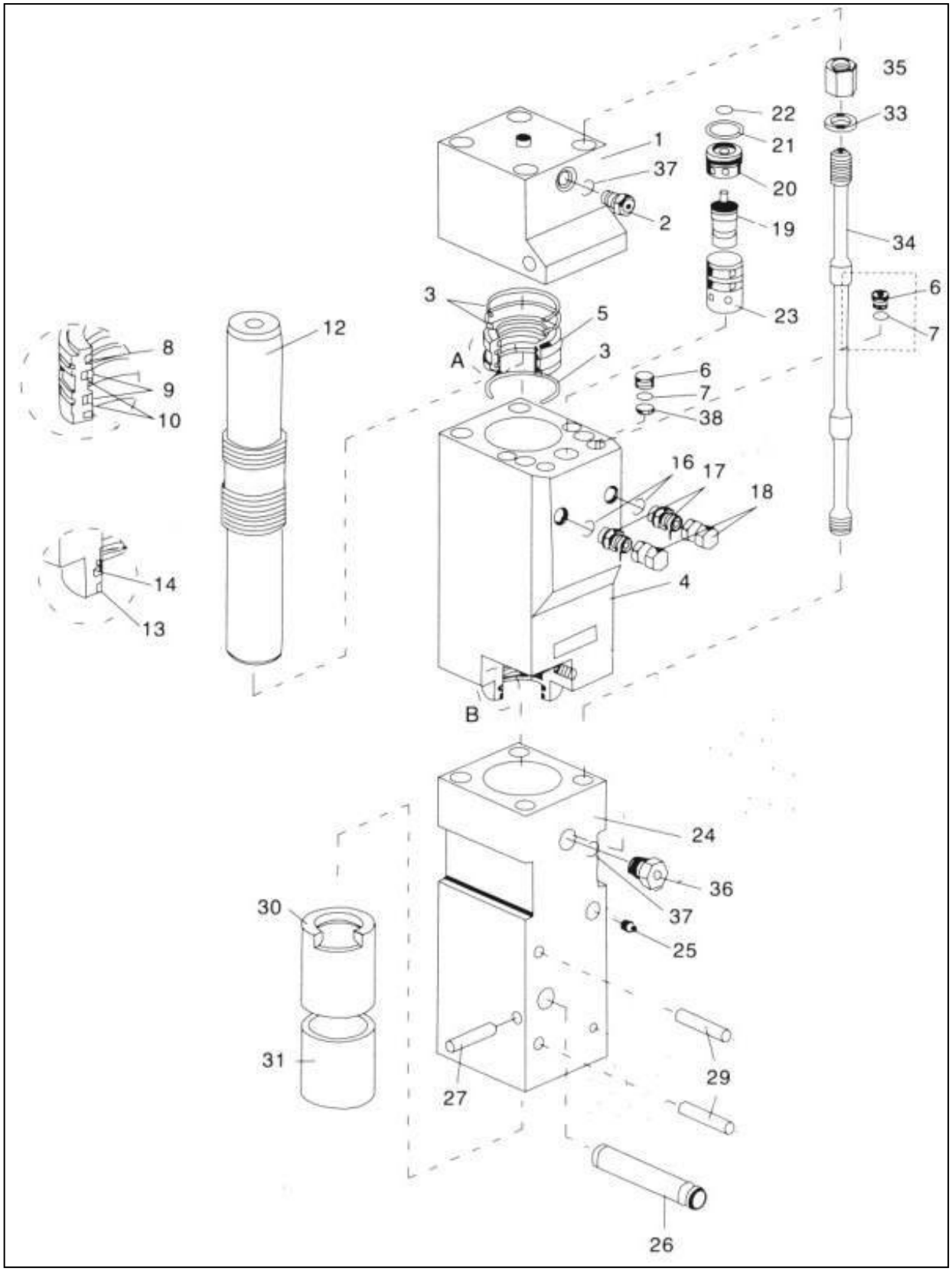

Hydraulic Power Unit Parts List

Ref#	Description	Qty	Ref#	Description	Qty
1	Back head	1	20	Valve plug	1
2	Charging valve assembly	1	21	O-ring	1
3	O-ring	3	22	O-ring	1
4	Cylinder	1	23	Valve sleeve	1
5	Seal retainer	1	24	Front Head	1
6	O-ring	3	25	Grease nipple	1
7	Plug	3	26	Tool pin	1
8	Gas seal Φ68	1	27	Stop pin	1
9	U-packing(Step seal) SPNS 68	1	29	Stop pin (bush)	2
10	O-ring	1	30	Ring bush	1
12	Piston	1	31	Outer bush	1
13	Dust seal LBI 70*80*6*8	1	32	Washer	4
14	U-packing ISI 70*80*6	1	33	Through bolt M24*525	4
16	O-ring	2	34	Through nut	4
17	Adapter	2	35	Air check valve	1
18	Union cap	2	36	O-ring	2
19	Valve	1			

MAIN EXPLODED DRAWINGS

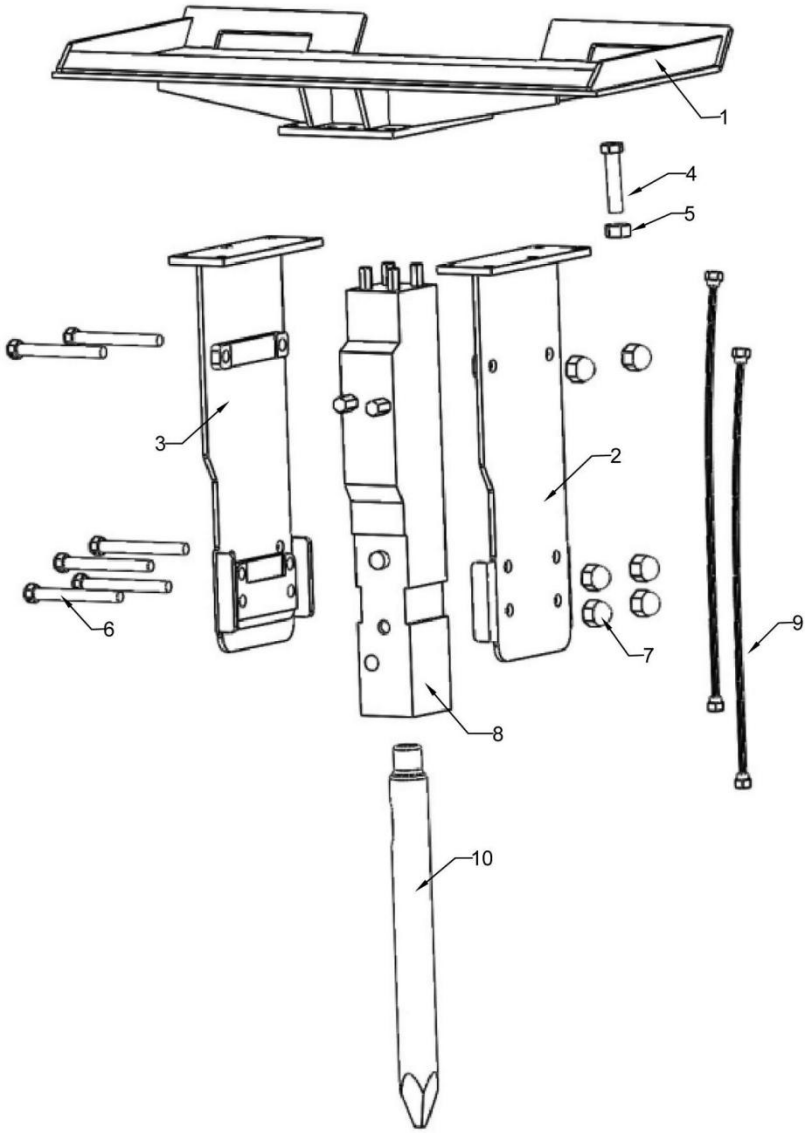

TMG-HB90S Main Parts List

Ref#	Description	Qty	Ref#	Description	Qty
1	Quick connect	1	6	Side bolt M30*250	4
2	Bracket (Rh)	1	7	Nuts 46mm	4
3	Bracket(Lh)	1	8	Hydraulic power unit	1
4	Stopper bolt M20*70	10	9	Hoses 1/2inch, 2.4m (NPT)	2
5	Stopper nut	10	10	Moil point chisel	1

HYDRAULIC POWER UNIT

EXPLODED DRAWINGS

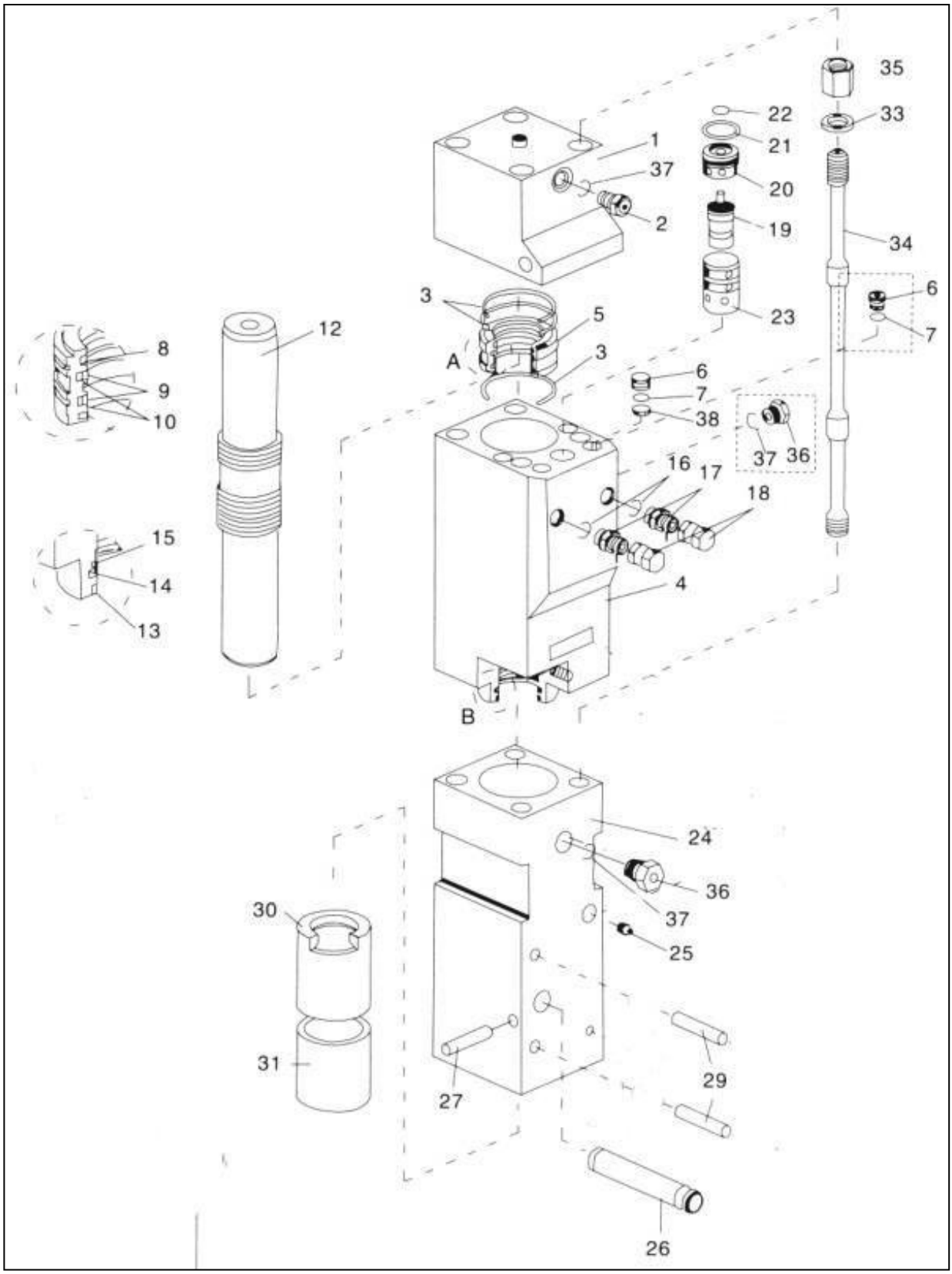

Hydraulic Power Unit Parts List

Ref#	Description	Qty	Ref#	Description	Qty
1	Back head	1	19	Valve	1
2	Charging valve assembly	1	20	Valve plug	1
3	O-ring	3	21	O-ring	1
4	Cylinder	1	22	O-ring	1
5	Seal retainer	1	23	Valve sleeve	1
6	O-ring	3	24	Front Head	1
7	Plug	3	25	Grease nipple	1
8	Gas seal Φ73	1	26	Tool pin	1
9	U-packing(Step seal) SPNS 73	2	27	Stop pin	1
10	O-ring	2	29	Stop pin (bush)	2
12	Piston	1	30	Ring bush	1
13	Dust seal LBI 75*85*6*8	1	31	Outer bush	1
14	U-packing ISI 75*85*6	1	33	Washer	4
15	U-packing ISI 75*85*6	1	34	Through bolt M24*525	4
16	O-ring	2	35	Through nut	4
17	Adapter	2	36	Air check valve	1
18	Union cap	2	37	O-ring	2