PRODUCT MANUAL

Skid Steer Post Driver Attachment

Model: AGT-PD750-PZ





- Please read the product manual completely before assembly
- Check against the parts list to make sure all parts are received
- Wear proper safety goggles or other protective gears while in assembly

Missing parts or questions on assembly?
Pleasecontact sales@agrotkindustrial.com
https://www.agrotkindustrial.com/

CONTENTS

OPERATING MANUAL

1. Safety Precautions..... 03

2. Standard Specifications..... 05

3. Construction & Main Parts..... 06

4. Post driver Tools..... 07

5. Preparation for Installation & Operation..... 09

6. Operation..... 10

7. Repair & Inspection..... 12

8. Inspection & Charging (Back Head)..... 15

9. Trouble – Shooting Guide..... 17

10. Customer's Report..... 20

11. Exploded Drawings and Past List..... 21

1. Safety Precautions

1.1 Safety Precautions

1) This manual contains safety, operation, and routine maintenance instructions. It does not contain service disassembly instructions. If needed, complete service disassembly and assembly instructions are contained in the manual, which can be ordered from your

Hydraulic Attachments -Post driver hammer authorized and certified dealer.

2) Post driver hammer Operator and maintenance personnel must always comply with the safety precautions given in this manual and on the decal and tags attached to the Post driver hammer and the hose.

3) These safety precautions are given for your safety. Review them carefully before operating the Post driver hammer and performing general maintenance or repairs.

4) Supervising personnel or the owner operator should develop additional precautions relating to the specific work area and local safety regulations. Place the added precautions in the space provided under local safety regulations.

5) Please read the following warning.

⚠ DANGER

SERIOUS INJURY OR DEATH COULD RESULT FROM THE IMPROPER REPAIR OR SERVICE OF THIS BREAKER.
REPAIRS AND/OR SERVICE TO THIS BREAKER MUST ONLY BE DONE BY AN AUTHORIZED AND CERTIFIED DEALER.

1.2 General Safety Precautions

(1) The Post driver hammer Series will provide safe and dependable performance of operation in accordance with the instructions given in this manual. Read and understand this manual and any decals and tags attached to the Post driver hammer before operation. Failure to do so could result in personal injury or equipment damage.

a) Operate the Post driver hammer in accordance with all laws and regulations which affect you, your equipment and the work site.

b) Do not operate the Post driver hammer unless you have read the carrier equipment manual and thoroughly understand all safety, operation and maintenance instructions.

c) Ensure that all maintenance procedures recommended in this manual are completed before using the equipment.

d) The operator must not operate the Post driver hammer or the carrier if any people are within the area where they may be injured by flying debris or movement of the equipment.

e) Know the limits of your equipment.

f) Establish a training program for all operators to ensure safe operation.

g) Do not operate the Post driver hammer unless thoroughly trained or under the supervision of an instructor.

h) Become familiar with the carrier controls before operating the carrier and the Post driver hammer.

i) While learning to operator the Post driver hammer and carrier, do so at a slow pace. If necessary, set the carrier mode selector to the slow position.

j) Make sure all controls (levers and pedals) are in the neutral position before starting the carrier.

k) Before leaving the carrier, always lower the boom and ensure the carrier is stable. Never be the machine with the engine running. Always engage the parking brake.

l) Stop the engine before attempting to make any repairs, adjustments or servicing to either the carrier or the Post driver hammer.

m) Do not operate the Post driver hammer at oil temperatures above 175˚F/80˚C. Operation at higher temperatures can damage to the internal components of the Post driver hammer and back-hoe/excavator and will result in reduced Post driver hammer performance.

n) Do not operate a damaged, leaking, improperly adjusted, or incompletely assembled Post driver hammer.

o) Do not modify this Post driver hammer in any manner.

p) To avoid personal injury or equipment damage, all Post driver hammer repairs, maintenance and service must only be performed by authorized and properly trained personnel.

q) If you do not understand how to safely operate your Post driver hammer, contact an authorized dealer for assistance.

r) Keep this manual with the Post driver hammer.

s) Do not operate this equipment if you are taking medication which may affect your mental judgment or physical performance.

t) Do not operate the equipment if you are under the influence of drugs or alcohol.

u) Remove the Post driver hammer from the carrier during transport.

2. Standard Specifications

2.1 Standard Specifications

Model	Unit	FD700S	
Operating weight	kg	398	
Working Flow Rate	liter /min	36-60	
Oil Relief Pressure	kg/cm2	170	
Working Pressure	kg/cm2	110-140	
Impact rate	bpm	500-900	
Chisel Diameter	mm	¢68	
Hose Diameter	inch	1/2	
Back head pressure	kg/cm2	16	

- The above specifications are subject to change without prior notice for the quality

3. Construction & Main Parts

3.1 Inner Valve Type

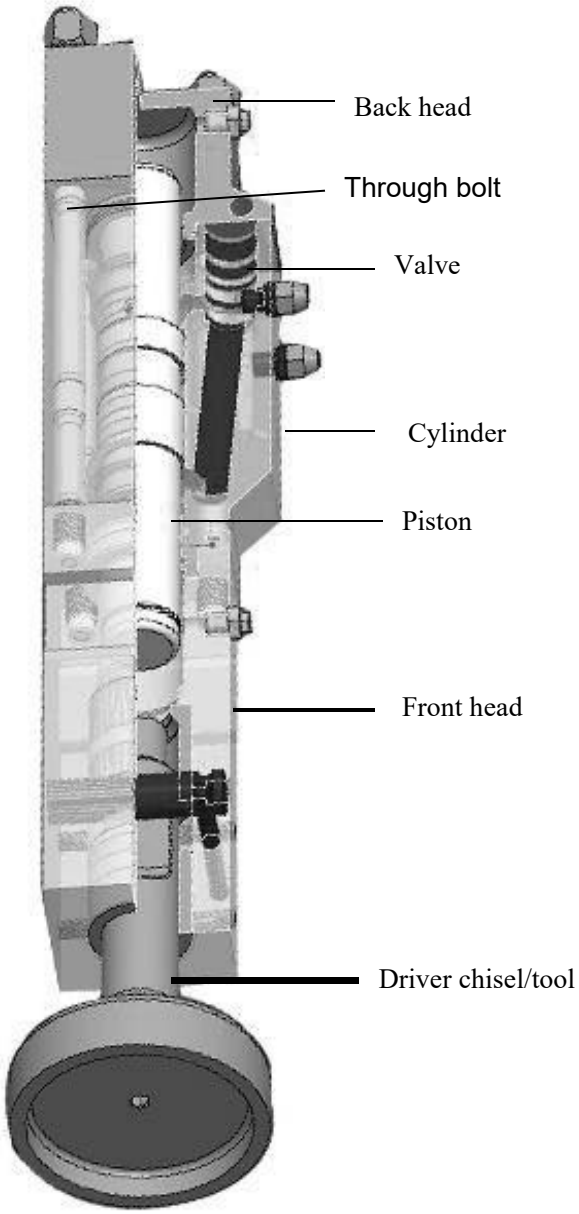

◆ **Through bolt**

Front head, cylinder and back head of Post driver hammer body are tightly fixed with four through bolts.

◆ **Back head**

This contains the cushion chamber charged with nitrogen(N2) gas that compresses during upward strokes of the piston, and serves to provide maximum absorption of piston recoil, efficiency storing this energy for the next blow.

◆ **Valve**

Cylinder control valve is built in the valve housing and controls piston reciprocation.

◆ **Cylinder**

The cylinder is the heart of the Post driver hammer containing hydraulic circuit for piston reciprocation

◆ **Piston**

Kinetic energy of the piston is converted into hammering energy after hitting the tool. The hammering energy transmitted to the tool breaks rocks

◆ **Front head**

The front head supports the whole Post driver hammer. Upper bushing prevents shock from the tool

◆ **Driver chisel/tool**

This transfers piston impact power to the objects.

4. Post driver Tools

4.1 Tool Replacement

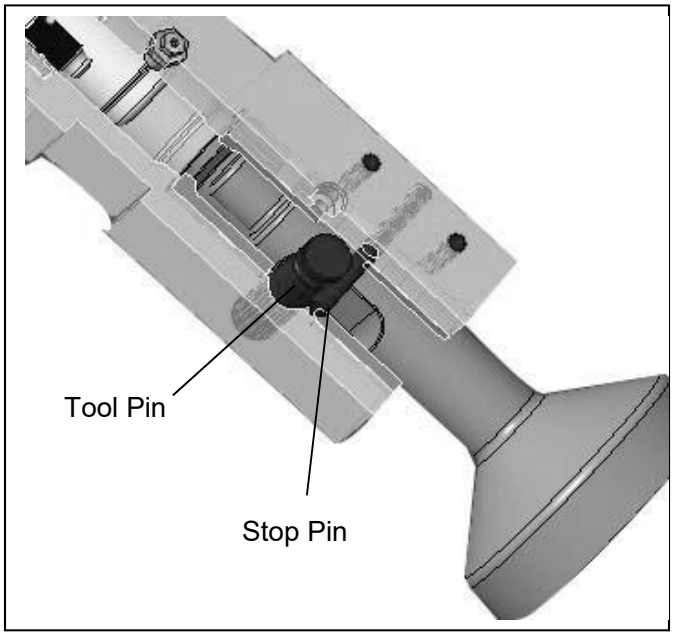

1) Remove the stop pin and the tool pin with a 330mm-long steel bar.

   When reassembling, align the groove in the tool and the tool pin hole and insert the tool pins.

2) Reverse disassembly procedures to install a replacement too.
   - Before installing a new tool, check each part for wear, breakage, scores, etc.
   - Remove burrs and swellings on each tool pin, apply a coat of grease to the movable areas of the tool pin and the tool and finally install the tool.
   - Excessively deformed the tool pins will make replacement of the tool difficult. The tool pins must be checked every 100 to 150 hours of operation.

- If the replacement tool is not a genuine part, we do not guarantee the performance of other parts of the Post driver hammer.

Ensure that the tool shank is well lubricated before inserting it into the tool holder.

Keep tools well-greased and sheltered from the weather when not in use.

A rusty tool is more likely to suffer fatigue failure.

The standard inner diameter of the bottom portion of the driver chisel is 200mm.

4.2 Greasing

1) Manual Greasing System

⚠ WARNING

- **Insufficient greasing may cause abnormal wear of front cover and tool, and tool breakage**

Apply grease to grease nipple on front head every 3 hours.

Adapt grease interval and amounts to tool wear rates and working conditions.

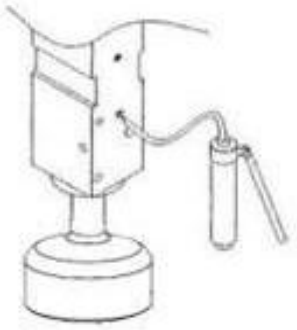

NOTICE

Tool shank must be well lubricated before installed in front head.

While greasing, hydraulic breaker must be upright against the tool.

To ensure that grease will penetrate between tool and inner bush.

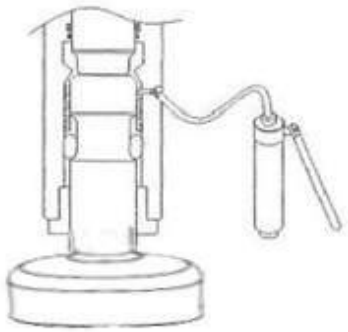

○
STANDING UP

Recommended Lubricant Greases

MAKER	GREASE
Esso	Beacon Q2
Shell	Retinax AM
Mobil 1	Mobil 1 Grease special

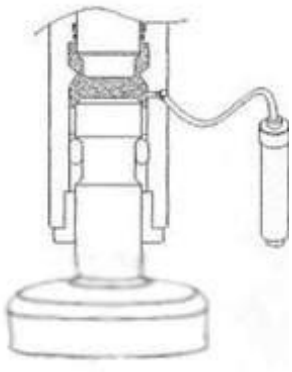

1) The Post driver hammer must be in a vertical position to grease, with enough down-pressure to push the tool up inside the housing.

2) Grease until clean grease oozes out around the tool and retainer pins.

3) Grease the Post driver hammer after every two hours of continuous use, or when the tool appears shiny where it rides inside the front head.

×
DOWN

▲CAUTION!
Grease often. Failure to lubricate regularly reduces the life of the tool, bushings, and front head.
If the tool becomes dry and shiny during the shift, apply additional grease.

5. Preparation for Installation & Operation

5.1 Hydraulic pipe lines for exclusive use.

Operation of the post driver hammer requires installation of hydraulic pipe lines for exclusive use of the post driver hammer.

As hydraulic pipe lines vary depending on base machines, the service engineer must first check hydraulic pressure, oil capacity, pressure loss and other conditions of the base machine before installing hydraulic pipe lines. Use only genuine parts In case of replacement because hydraulic pipe lines (hoses, pipes and fittings) are made of materials carefully selected in consideration of durability.

5.2 General view of Post driver hammer installed

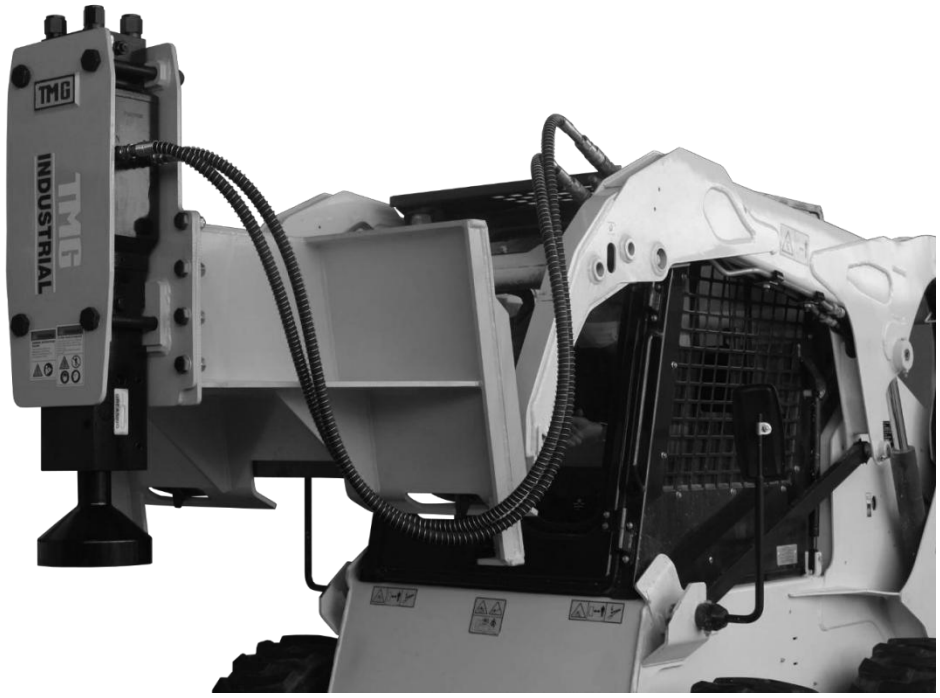

6. Operation

6.1 Operation method

1. Pre-drill a pilot hole if the soil conditions are rocky, frozen, or too difficult to simply drive the post into the ground.
2. Requires another person to position the pile. This person will set the pile at the desired location and grasp the pile securely.
3. After the pile is in position, let the Driver onto the top of the pile, ensuring the pile is inside of the bottom portion of the Driver, and continue lowering the driver until the weight of the Driver is supported by the pile.
After the pile is in position, the person who grasp the pile must leave vehicle as soon as possible.
Don't allow anyone stand under the attachments.
4. Move the vehicle slowly left, right, forward, or backward as needed until the pile is vertical to the ground.
5. The loader arms should be lowered as the pile is driven into the ground.
6. Drive the pile to the desired depth. Raise the Driver and move on to the next pile.

6.2 Operation Precautions

IMPORTANT

- BEFORE LEAVING THE CARRIER, ALWAYS LOWER THE BOOM AND INSURE THE CARRIER IS STABLE.
  NEVER LEAVE THE MACHINE WITH THE ENGINE RUNNING.
- ALWAYS ENGAGE THE PARKING BRAKE.

1) Stop operation as soon as hoses vibrate excessively.

Excessive vibration of high and low pressure hoses of the breaker calls for an instant disassembly and repair.

Contact the nearest service station.

For caution’s sake, check oil leakage at the bank-head.

2) Avoid all blank hammering.

Continuous blank hammering will not only damage front head and loosen and break bolts,
but also adversely affect base machine.
Blank hammering occurs when proper position of the Tool is not applied to the Post driver hammer or the Tool is used as a lever. (Sound changes during blank hammering.)

3) Operate the Post driver hammer at proper engine speed.

Driving the pile at the specified engine speed.
Raising engine speed more than necessary does not strengthen the force but increase oil temperature to the detriment of the pistons and the valves.

4) Do not allow the Post driver hammer to fall to drive the pile.

Dropping the Post driver hammer onto the pile will apply excessive force to the Post driver hammer or the base machine, causing damage to many parts of the Post driver hammer and the base machine.
Let the driver press the pile to drive it into the ground.

5) Do not lift things with the Post driver hammer.

Lifting materials by hanging wire in the bracket or the Tool not only causes damage to the Post driver hammer but also is very dangerous when operating.

6) Warm up base machine engine Prior to Operation

Especially in winter, the base machine engine should be warmed up for five to ten minutes (about oil temperature 30℃~40℃/80℉~105℉) before Post driver hammer operation.
Follow the Instruction Book for the Base Machine for warming-up of the engine.

7) Do not touch the Tool during post driver hammer operation.

During Post driver hammer operation, the Post driver hammer parts can reach high temperatures.

8) When operating the Post driver hammer you must use the ear, eye and breathing protection.

9) Greasing danger

With the Post driver hammer mounted on the machine, apply down pressure on the Driver Tool.
And fill cavity with the recommended grease through the marked grease nipple.

10) Always wear the eye protection when removing the stop pin.

Remove the stop pin by doing it in and out with a punch and hammer.

7. Repair & inspection

7.1 Periodic Maintenance (Every 100 hours)

1) Remove the tool and all grease from the bushing

Do not use a pressure washer, steam or solvents as they damage the seals.

Chuck for chips or cracks inside the housing and on the bushing surfaces.

Cracks and chips could indicate that :

① Lubrication so insufficient

② Grease type is not appropriate

③ Blank hammering and side loading is occurring and hammer is being operated improperly.

2) Check wear on Tool Pin

Examine the shoulders and side surface.

If they are worn or deformed, rotate or replace as required.

3) Check wear on chisel holder bushing

Replace tool, bushing or both where the combined wear exceeds 5mm.

Some bushings are grooved to provide even grease distribution.

Replace the bushings when the grooves are worn through.

Excess bushing wear causes tool misalignment to the piston, causing premature Post driver hammer failure.

4) Replace damaged or worn parts

Then wipe all components clean, including the lubrication port.

Hand grease the tool shank and inside the chuck bushings before placing it back into the hammer.

7.2 Daily Post driver hammer inspection

Before starting operation, be sure to inspect the Post driver hammer referring to the following table.

Inspection Item	Inspection Point	Remedy
Looseness, missing and damage bolts and nuts	Through bolts. Bracket mounting bolts.	Check looseness. Retighten securely.
Loose of hose fittings, visible damage to hose and oil leakage	Hydraulic popes for the post driver. Oil hoses.	Retighten securely. Replace seriously damaged parts.
Abnormal oil leakage	Connections of Back head and cylinder. Clearance between front head & Tool.	Consult with local service station for further inspection.
Abnormal wear and cracks on tool	Tool	Deformed, burred and worn out tool should be repaired. Excessively worn too needs to be replaced.
Greasing	Grease at start and every 2 or 3hours using the head grease pump. Pumping: 5~10 times (Greasing position and method shown at left)	Grease the front head
Level and contamination of hydraulic oil	Conditions of the hydraulic oil	Contamination of hydraulic oil varies with operating conditions, but oil color tells the level of contamination criteria for judging contamination is specifically set by post driver
Missing the rubber plugs and the snap rings	Rubber Plugs Snap Rings	A seriously damaged one must be replaced.

7.3 Regular Post driver hammer inspection & Maintenance

Regular inspection is essential for keeping the post driver hammer operating in the best condition.

Consult with the service station for regular inspection and maintenance.

Customers are recommended to contact the local dealer for inspection within six months after delivery.

7.4 Replacement of the Driver Tool

The Tool is deformed by burrs occurring after long-term use. When a Tool tip is worn out,

The Tool is liable to slip. Then, sharpen the Tool tip. Grinding the Tool tip many times to sharpen the edge, but it will make the heat-treated hardened with a new Tool. If the gap between the Tool and the Tool bush becomes large, the piston will fail exactly to hit the upper part of the Tool, resulting in damage. When the gap is found to be over 9mm, replace the Tool bush together with the Tool.

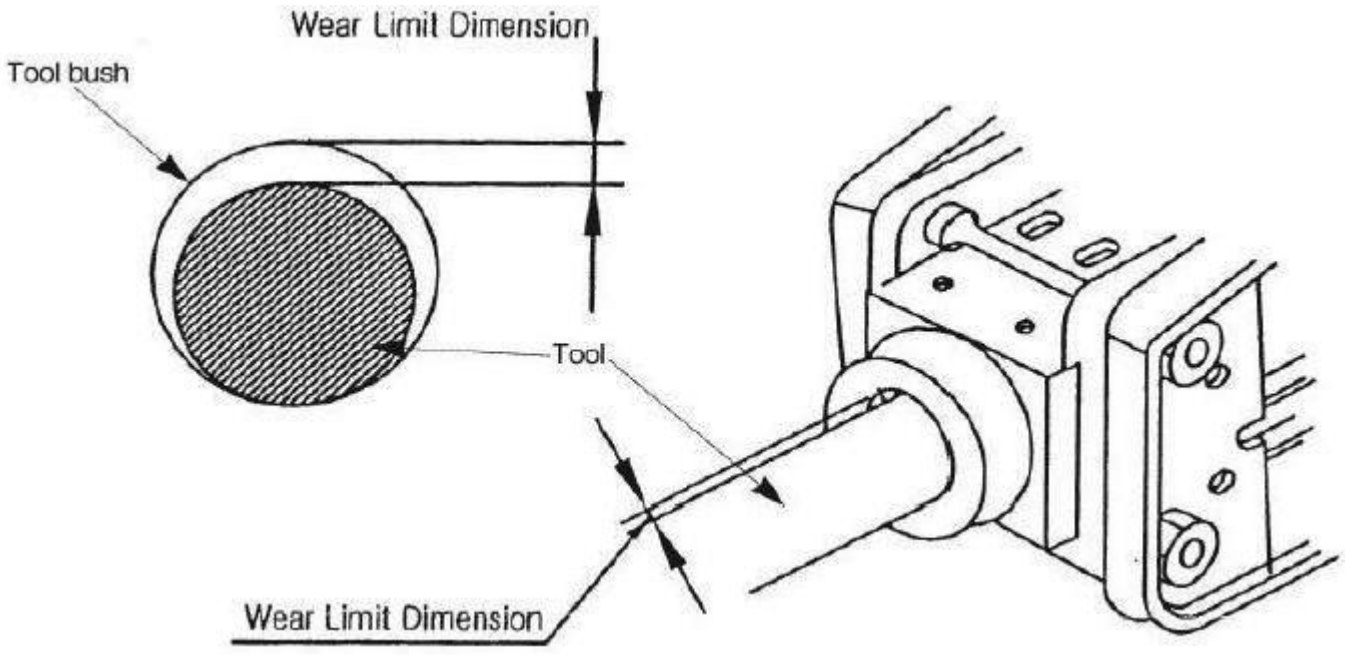

■ Change Timing of the Tool Bush (mm)

Model	Wear Limit(mm)
TMG-PD700S	4

8. Inspection and Charging

Nitrogen (N2) Gas at the Back-Head

⚠ WARNING

- CHARGING GAS PRESSURE CHANGES ACCORDING TO THE TOOL CONDITION. LAY DOWN THE BREAKER AND LET THE TOOL EXTEND FULLY.
- STAY CLEAR OF THE TOOL WHILE CHARGING THE BREAKER WITH GAS. THE TOOL MAY BE IMPACTED BY THE PISTON AND FORCED OUT ABRUPTLY.
- WHEN THE THROUGH BOLTS ARE CHANGED THE N_2 GAS MUST BE DISCHARGED WITH THE BACK HEAD, AS IT IS HIGHLY PRESSURIZED.
- USE NITROGEN GAS ONLY.
- SEE " CONVERSION TABLE FOR CHARGING N_2 GAS PRESSURE TO THE BACK HEAD "

8.1 N2-Gas Charging Tools to the Back-Head

① N2-Gas Cylinder ② Adaptor Nut ③ Adaptor ④ Hose ⑤ Gas Charging Kit

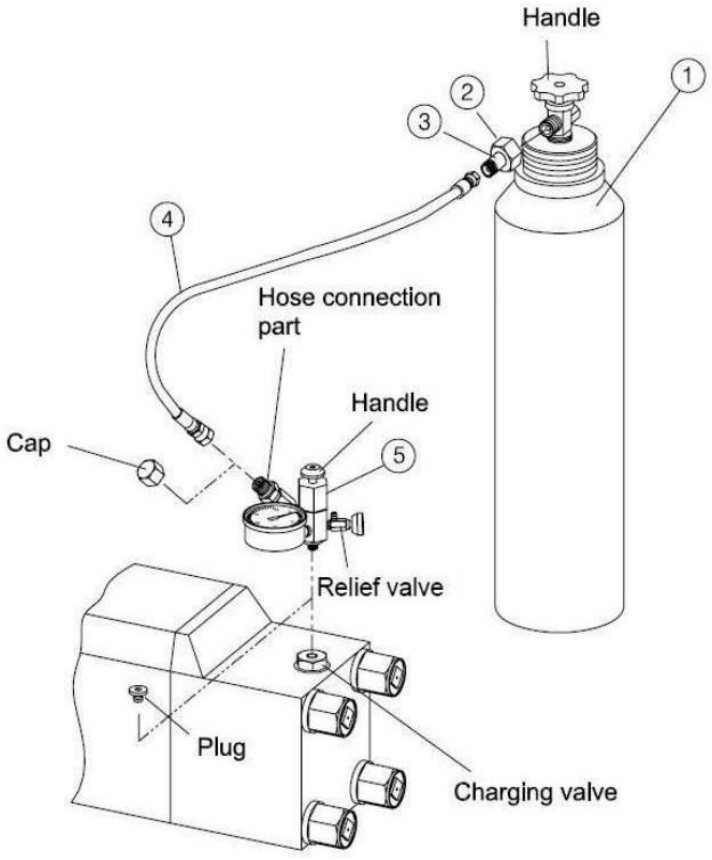

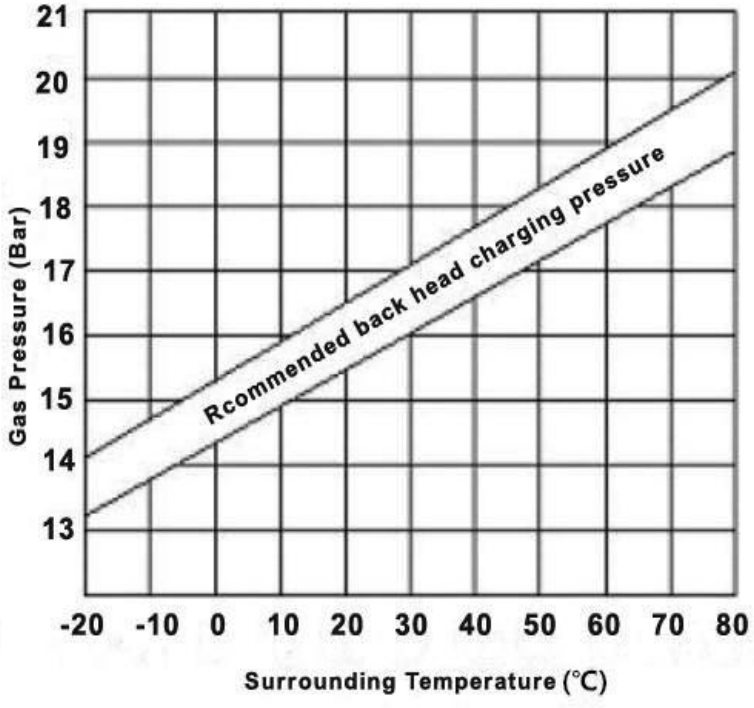

8.2 Inspection of N2-Gas in the Back-Head

1) Make sure that the cap and the valve of the gas charging kit(⑤) are fully tightened. Screw the gas charging kit(⑤) into the charging valve of the Back-Head after removing the plug.
2) At this time the handle must be short to prevent the gas from coming out.
3) Push the handle into the charging valve fully, so the gas pressure inside the Back-Head is indicated on the pressure gauge.
4) If the gas pressure is normal, unscrew the gas charging kit after discharging gas inside the gas charging kit. Reinsert the plug to the Post driver hammer.
5) If the gas pressure is higher or lower, charge it as described below.

■ Charging of N2-Gas into the Back-Head

1) Connect the charging hose(④) to N2-gas cylinder(①) after screwing the bomb adapter (④) onto adapter nut(②) and installing than to the N2-gas cylinder.
2) Connect the gas charging kit(⑤) to the charging hose(④) after unscrewing the cap on the gas charging kit.
3) Install the gas charging kit(⑤) to the charging valve of the Back-Head. At this time the handle of the gas charging kit must be up position to prevent the gas from coming out.
4) Push the handle of the gas charging kit fully and turn the handle of the N2-gas cylinder counter clockwise gradually to charge the Back-Head.
5) When the gas pressure exceeds 10% higher then the specified pressure, close the N2-gas cylinder by turning the handle clockwise.
6) Leave the handle of gas charging kit up. Generated pressure makes, it return back to original position naturally.
7) Remove the charging hose(④) from the N2-gas cylinder(①) and the gas charging kit(⑤), and the screw the cap onto the gas charging kit.
8) Push the handle of the gas charging kit fully, and the gas pressure inside the Back-Head is indicated on the pressure gauge. When the pressure is higher, discharge a small amount of gas from the Back-Head repeatedly opening and closing the valve and then gas pressure falls to the specified pressure.
9) When the gas pressure reaches to the specified pressure, close the valve and release the handle.
10) Open the valve completely and discharge gas inside the gas charging kit. Remove the gas charging kit from the charging valve of the Back-Head and install the plug to the charging valve.

9 TROUBLESHOOTING GUIDE

9.1 Problems in operation

If the Post driver hammer does not work or blow frequency and blow get worse, check following troubleshooting.

And then inspect according to the following order.

Symptom	Cause	Required action
No blow out	1.Excessive back head gas pressure 2.Stop valve (s) closed 3. Lack of hydraulic oil 4. Wrong adjustment of pressure reducing valve 5. Faulty hydraulic hose connection 6.Oil back head infection	1.Re-adjust nitrogen gas pressure 2.Open Stop Valve 3. Fill hydraulic oil 4. Re-adjustment valve 5.Tighten or replace 6.Replace back head O-Ring, Or cylinder bush stop seal
Low impact power	1.Line leakage or blockage 2.Clogged tank return line filter 3.Lack of hydraulic oil 4. Hydraulic oil contamination, or heat deterioration 5. Poor main pump performance 6.Back head nitrogen gas low 7.Low flow rate by mis-adjustment of flow control pressure reduction valve 8.Tool out of range for blowing position	1. check lines 2. Wash fitter, or replace 3. Fill hydraulic oil 4. Replace hydraulic oil, rinse tand and release oil inside lines 5.Contact authorized service shop 6.Refill nitrogen gas 7.Re-adjust reduction valve 8.Rush down tool by excavator
Irregular impact	1. Low accumulator gas pressure, of bad accumulator 2. Bad piston or valve sliding surface 3.Piston moves down/up to blank blow hammer chamber	1. Refill nitrogen gas 2. Call an authorized service man. 3.Rush down tool by excavator operation
Bad tool movement	1. Tool diameter incorrect 2. Tool and pin jammed from tool retainer 3.Jammed lower bush and tool 4.Deformed tool and piston contact area	1. Replace tool with genuine replacement parts 2. Smoothen rough surface of tool 3.Smoothen rough surface of lower bush interior 4.Replace tool
Oil leakage between front head and tool	1.Cylinder seal worn	1.Replace seal
Gas leakage	1.O-ring damage in related parts	1.Replace relevant o-ring

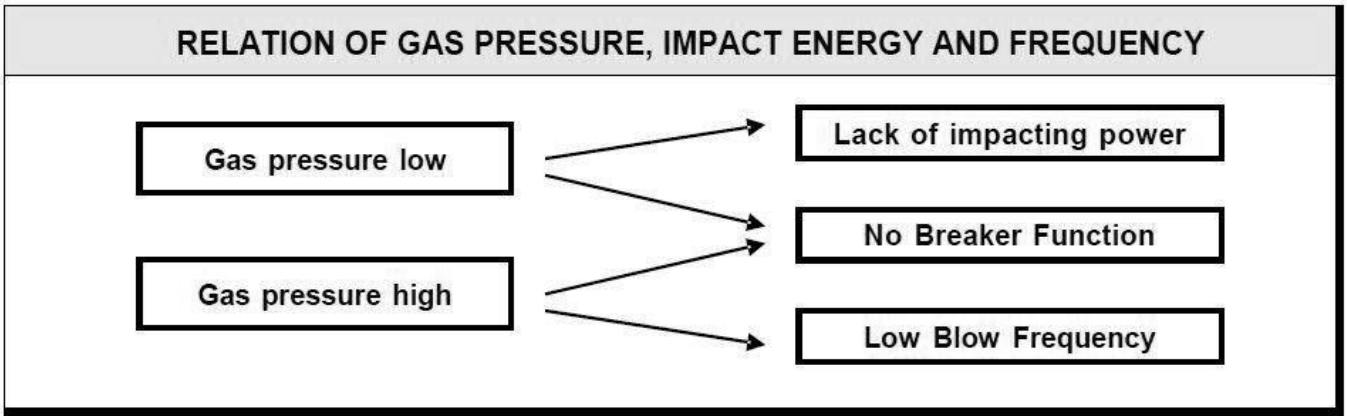

9.2 Gas Leakage

Trouble	Cause	Remedy
Gas leakage from the top of charging valve	• Defective o-ring in charging valve • Defective or damaged in charging valve	• Replace • Repair or replace charging valve
Gas leakage between charging valve and back head	• Defective o-ring in charging valve • Defective valve loose in back head	• Replace • Re-tighten
Gas leakage between Cylinder and back head	• Defective o-ring in back head	• Replace
Gas leakage from drain Plug hole	• Defective gas seal in seal housing • Defective step seal in seal housing • Defective of piston and seal housing	• Replace • Replace • Repair or replace seal housing and piston (When repaired replace packing)

9.3 Oil Leakage

Even if oil is leaking, there is no use to replacing parts at all times check the following points listed in the chart below.

The user can check the (☞) marked points before calling dealer.

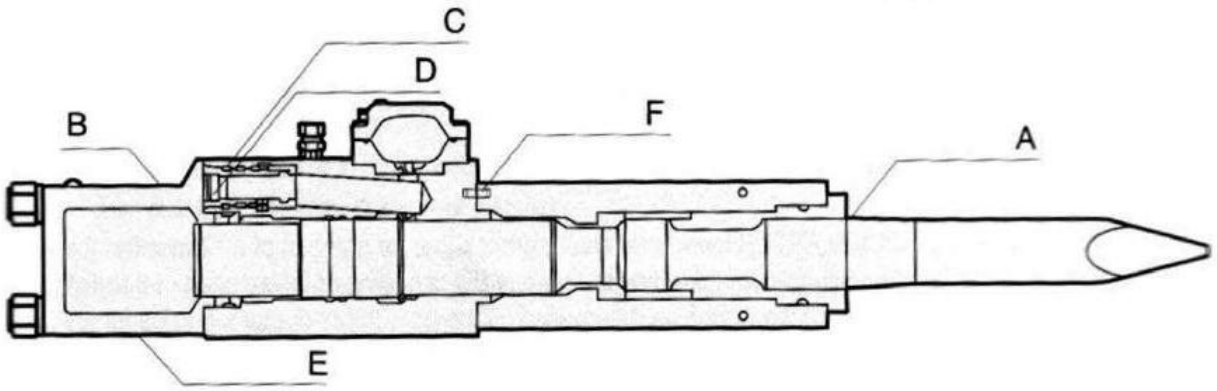

	Area of oil leakage	Condition	Causes & Remedies
A	**Between the tool and lower bush**	• A large amount of oil is leaking • Check if it is coming from oil or grease	Seals cam aged REPLACE
B	**Surface of breaker**	• Oil leaking from the hose & flange adapter portion	☞Loose breaker hoses and bolts RETIGHTEN
C	**Valve housing bolts & cap bolts**	• Oil leaking from reassembly of valve after overhaul	NORMAL : During assembly from lubrication oil & anti-rust oil applied
D	**Between main valve & surface of cylinder**	• Oil leaking from reassembly of valve after overhaul	NORMAL : - Clean oil - Check that seal is damaged - Loosen bolts - Replace withe new seal
E	**Between cylinder and back head**	• Oil leakage	☞Loose tie rod nuts RETIGHTEN
		• Oil leaks again	REPLACE Damaged o-ring
F	**Between cylinder and front head**	• Oil leaking	Loose plugs assembled on the surface of cylinder RETIGHTEN Replace damaged seals

10. CUSTOMERS' REPORT

10.1 Delivery and Installation Card

This is report is for checking that Post driver hammer is correctly delivered and equipped on machine Distributor should correctly draw up this. This is report must be drawn up in typewritten and Informed within 7 days after the date When delivered Post driver hammer to customer.

■ Machine

- Maker / Model : Manufacturer and model name of the carrier

- Operating Weight

- Operating Hours : Actual operating hours at time or Date delivered out Post driver hammer

- Oil Filter – If there is mark "Y" , if not mark "N"

If there is not it or it's condition is bad, Post driver hammer should be troubled easily. Therefore please recommend customer to install it in change new one.

- Others : Performance or Condition of Engine and Hydraulic pump.

■ Post driver hammer

- Model & Serial No : Model name and Serial No. of the Post driver hammer

- Operating Pressure : Actual operating pressure

- Relief set Pressure : Actual relief valve setting pressure for Post driver hammer

- Operating Oil Flow : Actual required operating flow

- Gas Pressure : Actual pressure in accumulator or gas chamber

MAIN EXPLODED DRAWINGS

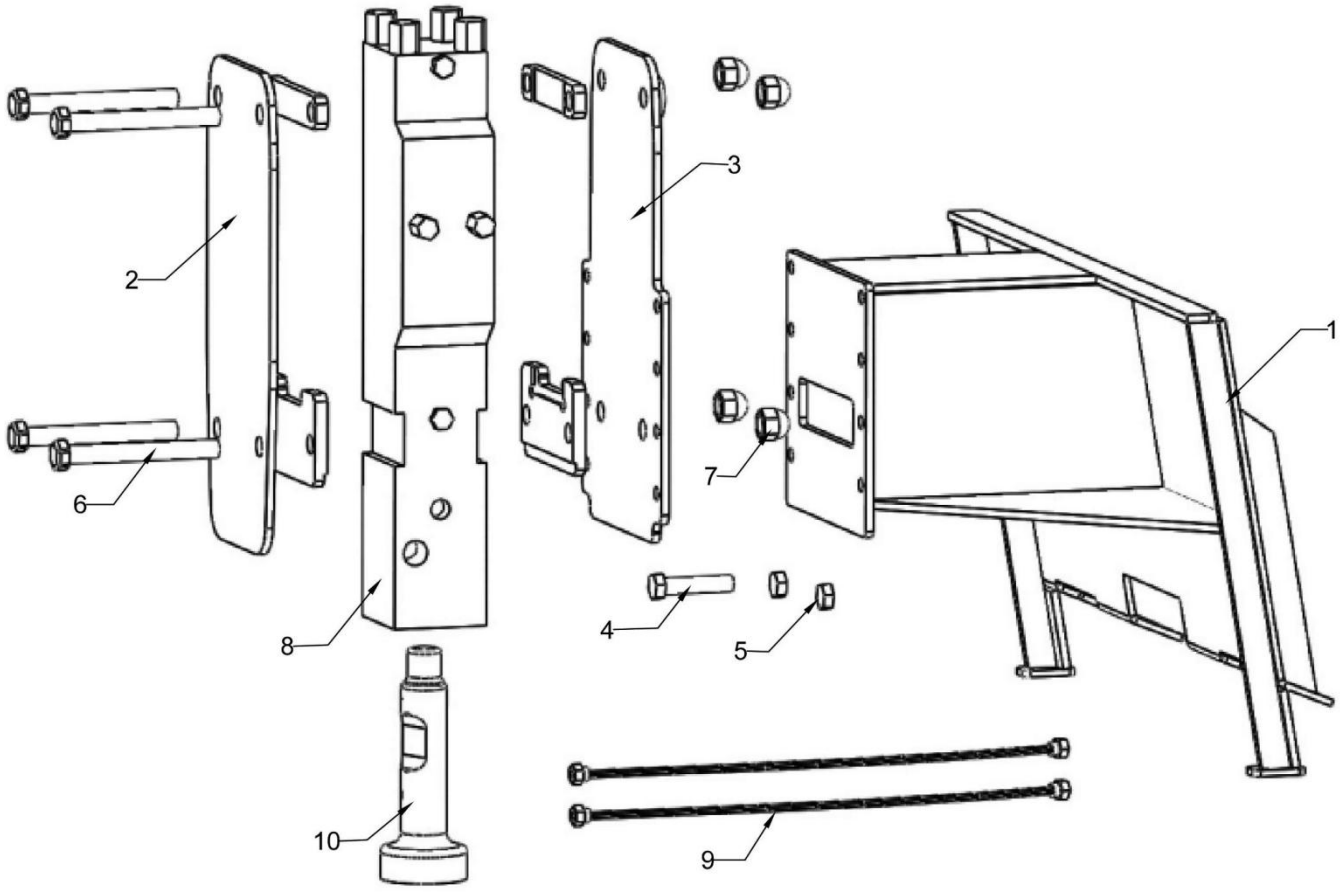

Main Parts List

Ref#	Description	Qty	Ref#	Description	Qty
1	Quick connect	1	6	Side bolt M27*230	4
2	Bracket welder(FR)	1	7	Nuts 41MM	4
3	Bracket welder(RR)	1	8	Hydraulic power unit	1
4	Stopper Hex.Bolt M20*55	8	9	Hoses 1/2inch,2.4m	2
5	Stopper Hex.Nut	8	10	Post driver chisel	1

HYDRAULIC POWER UNIT

EXPLODED DRAWINGS

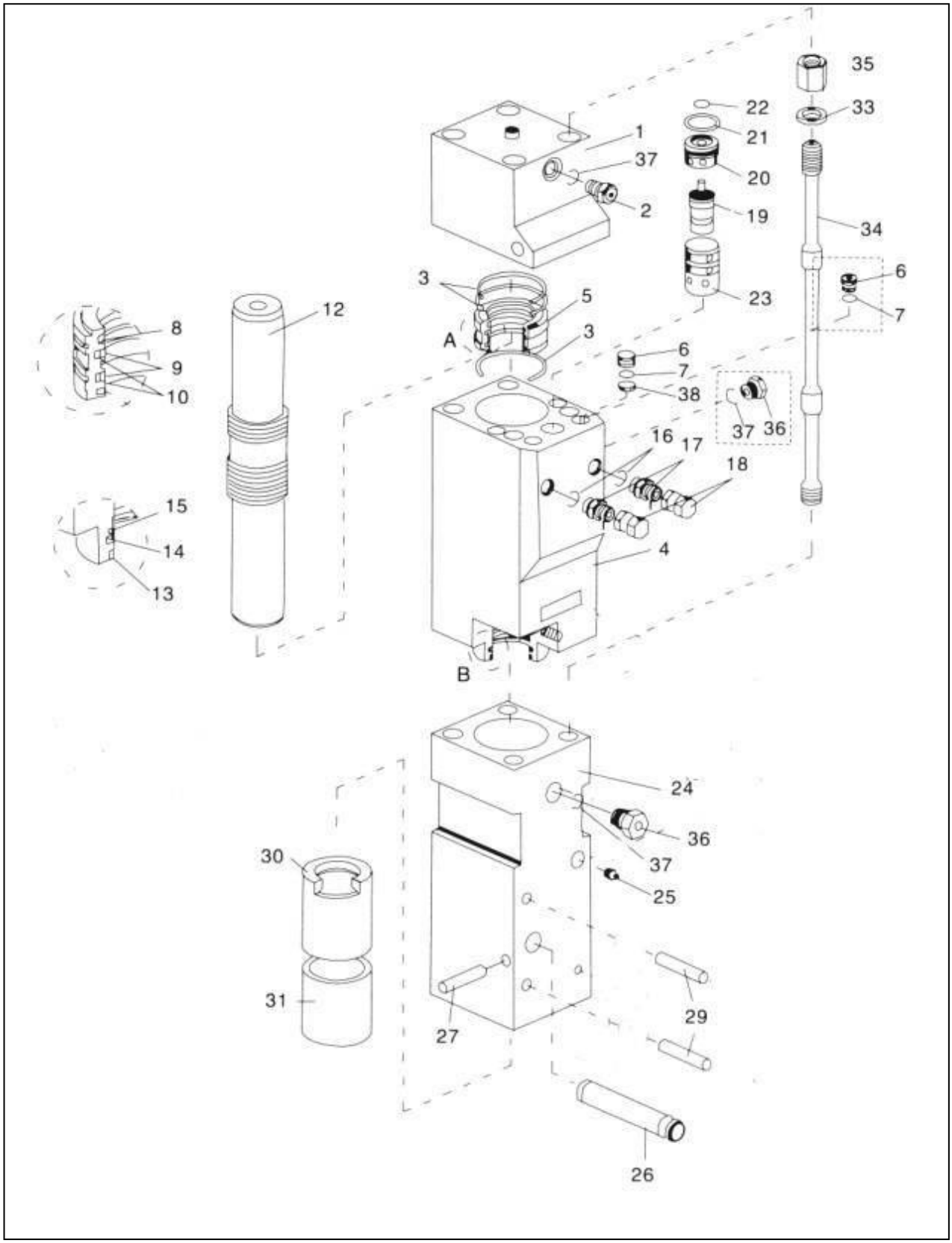

Hydraulic Power Unit Parts List

Ref#	Description	Qty	Ref#	Description	Qty
1	Back head	1	20	Valve plug	1
2	Charging valve assembly	1	21	O-ring	1
3	O-ring	3	22	O-ring	1
4	Cylinder	1	23	Valve sleeve	1
5	Seal retainer	1	24	Front Head	1
6	O-ring	3	25	Grease nipple	1
7	Plug	3	26	Tool pin	1
8	Gas seal Φ68	1	27	Stop pin	1
9	U-packing(Step seal) SPNS 68	2	29	Stop pin (bush)	2
10	O-ring	2	30	Ring bush	1
12	Piston	1	31	Outer bush	1
13	Dust seal LBI 70*80*6*8	1	33	Washer	4
14	U-packing ISI 70*80*6	1	34	Through bolt M27*570	4
15	U-packing ISI 70*80*6	1	35	Through nut 41mm	4
16	O-ring	2	36	Air check valve	1
17	Adapter	2	37	O-ring	2
18	Union cap	2			
19	Valve	1			