Mini Slip Loader

PERATION & MAINTENANCE MANUAL

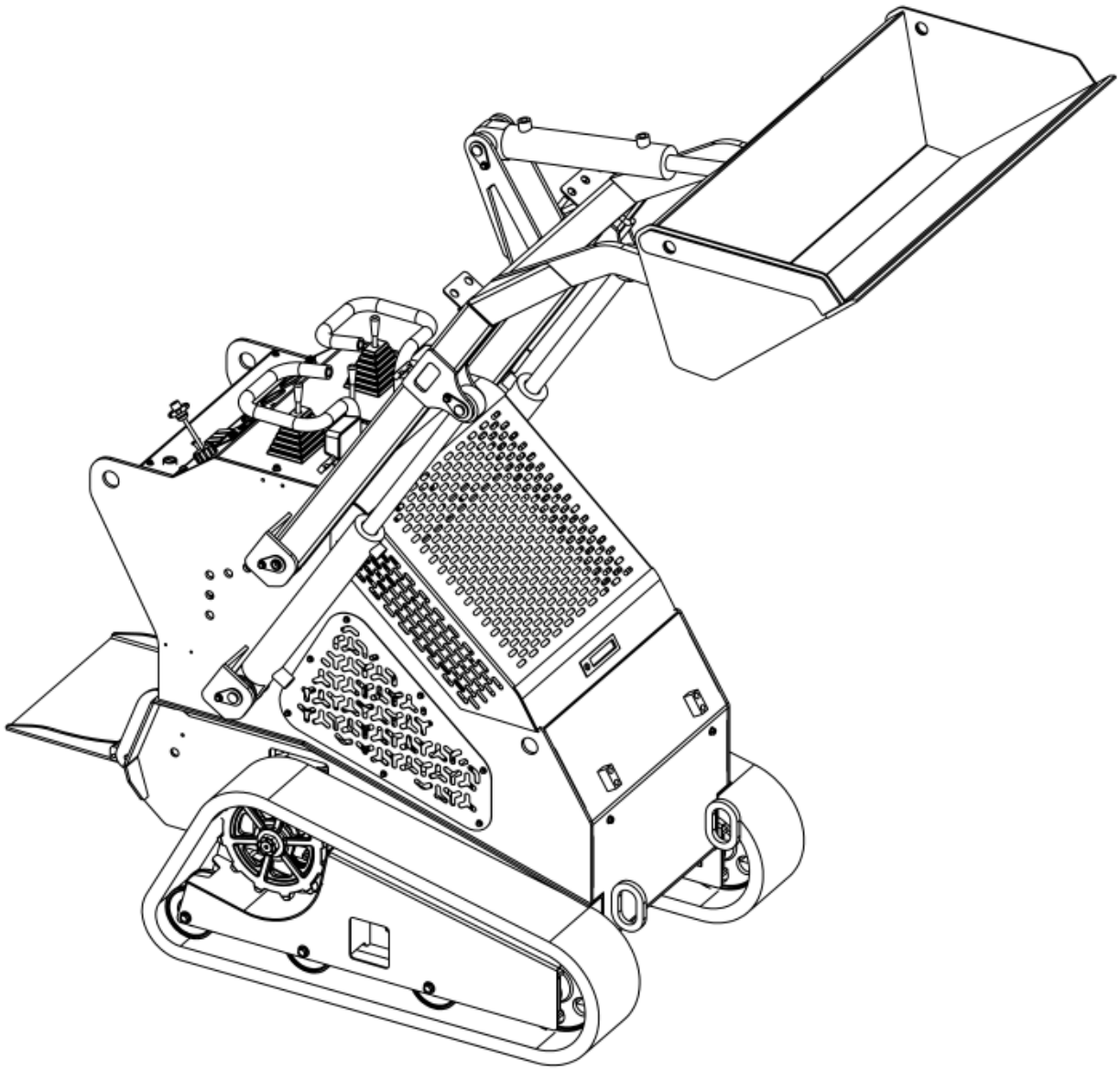

TABLE OF CONTENTS

1. PRODUCT SERIAL NUMBER 1

2. INTENDED USE 2

3. MACHINE COMPONENTS 3

4. OPERATOR ORIENTATION 4

5. SAFETY RULES 5

6. OPERATION GUIDE 8

7. CONTROLLING SYSTEM 10

8. PREPARE BEFORE WORKING 15

9. ATTACHMENT CONNECTION 19

10. DRIVE 21

11. MACHINE STORAGE 22

12. SAFETY MAINTENANCE 23

1. PRODUCT SERIAL NUMBER

Write your machine model number, product serial number on the line provided below. If needed, give these numbers to your dealer when you need parts or information for your machine.

Make a record of the numbers; keep the record in a safe place. If the machine is stolen, report the number to your local law enforcement agency.

2. INTENDED USE

This is a wheel style mini skid steer loader designed for compact construction work. The has a quick attach mount plate which makes it easy for an operator to connect different attachments. The loader is designed for operation in temperatures typically experienced in earth moving and construction work environments. Provisions may be required to operate in extreme temperatures.
The should be operated, serviced, and repaired only by persons familiar with its particular characteristics and acquainted with the relevant safety procedures.

3. ***MACHINE COMPONENTS***

1. Operator platform
2. Machine body
3. Track
4. Operator station
5. Engine
6. Side Cover
7. Lift arms
8. Upper cover
9. Mount plate

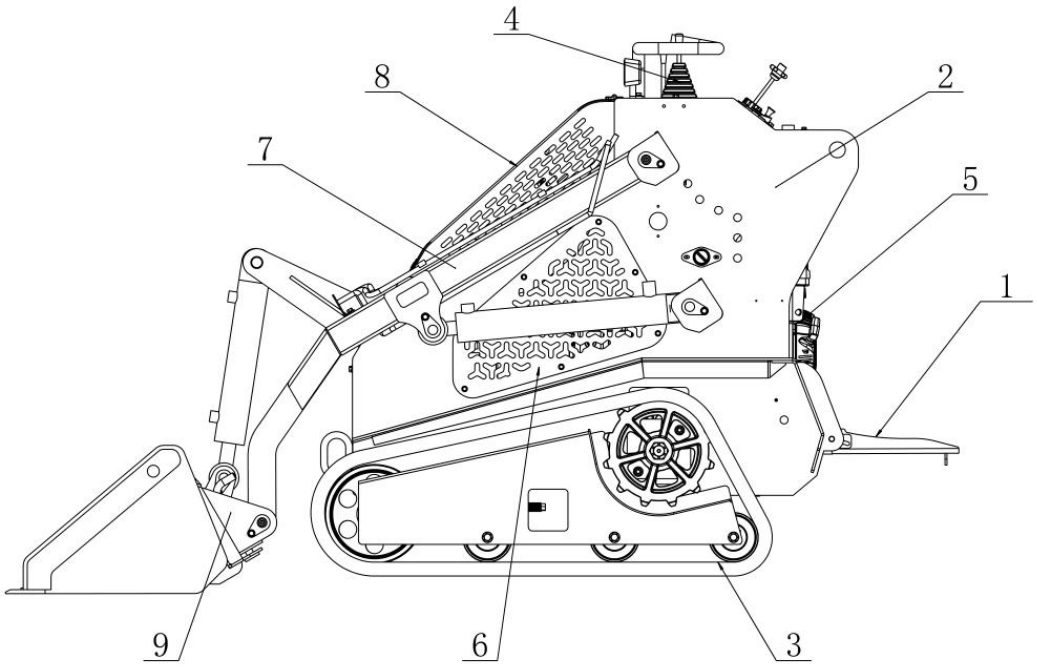

4. ***OPERATOR ORIENTATION***

1. Machine front
2. Machine right
3. Machine rear
4. Machine left

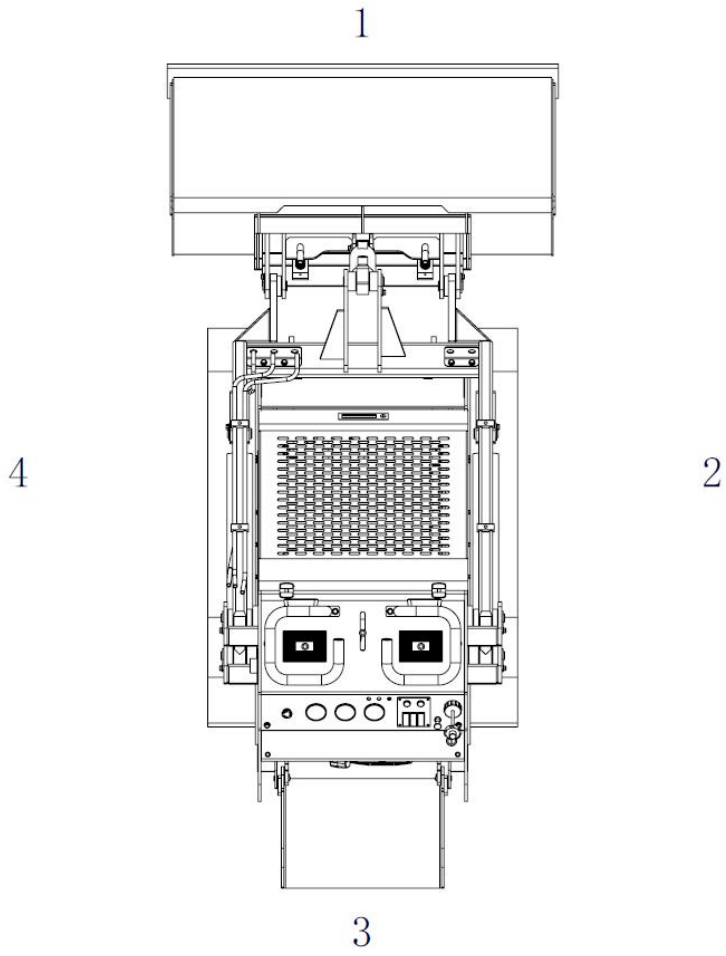

5. *SAFETY RULES*

WARNING: This safety alert symbol indicates important safety messages in this manual. When you see this symbol, carefully read the message that follows and be alert to the possibility of death or serious injury.

Safety operation is operator's duty.
Most accidents are caused by the operator un-according to the safety rules. If you realize the dangerous and are of full careful before accidents, you can avoid the accidents. Please reading the safety rules carefully when you maintenance, operate and fill the oil. Please see the basic preventive measures and operation in dangerous conditions as below.

:This means be careful, when operate the mini skid steer loader please take care of your safety.

Warning

Operator must understand the below operation guide.



★It's your duty to understand the maintenance guide and comply with the relation rules.

Warning

All the warnings are for your safety.

★When operating the mini skid steer loader, the wrong operation method for filling oils may cause some danger or serious deadly injure.

★Do never operate, maintenance or fill oils of the machine before you completely understand the Operation Manual.

This symbol indicates dangerous, when you see this symbol on the mini skid steer loader you must be careful, otherwise it will cause danger or deadly injure to operator and bystander. Both the operation panel and the operation manual are with this symbol. We wish you can realize all the danger and can avoid accident.

Before delivering to the user, each loader was tested and examined thoroughly. You should operate carefully in the first 100 hours to keep all parts in good condition. Roughly operation will shortened the useful life or reduce the efficiency. For new equipment, you should pay attention to the following:

- Running the machine 5 minutes in idle after started.
- Avoid operate the loader with full speed.
- Avoid rapid start, rapid accelerate, unnecessary urgent stop or turning.
- Clean the dust and scraping when you change the filter element.
- Please check all the potential dangerous if working in a poor environment.
- Please check the working time of the hour meter.

DANGER WARNING IMPORTANT, These symbols have closely relation with the operator's safety.

WARNING
The warning on the machine is for your safety,contrary to the warning will cause loss of life.

DANGER
The danger symbol indicates is dangerous of operator or the equipment.Contrary to the danger Instruction will cause serious deadly injure.

IMPORTANT
This symbol indicates that operator must comply with the step,to avoid damage the machine.

Safety Warning Symbol

Safety Warning Symbol means "CAUTION", "WARNING", "SAFETY", it indicates many important safety information of the machine. When you seeing these symbols, you should attention to the possibility serious injure or death. Please do comply with the follow safety instructions.

6. *OPERATION GUIDE*

To new loaders

Loaders need running in for 100 hours, which will exert fully their capability. New loaders should be used performing these three steps, which are in the following list.

Hours	Load
Within 10 hours	About 60%
Within 100 hours	About 80%
After 100 hours	100%

Warning

Using machine excessively will make the machine be worsening and reduce its life.

You should use it carefully before the first 100 hours.

Before start loaders

Please read this manual before using machines.
Keep the step clean and exchange it in time when it is injured.
Before starting engine, all controlled accessories should be in their primary places.

WARNING: In order to avoid accidents and deadly injure, operator must read and study the manual carefully before operating, when operate the loader, keep your foot on the step.

Daily checks

To keep the machine in good work condition, should do daily check as below:

- Engine cooling system
- Tyres
- Loosing or damage parts Safety Symbols
- Control Panel
- Liquid height of Coolant, Engine Oil, Hydraulic Oil and Fuel, checked if there is any leaking Check and add the Lubricating Oil regularly.
- Check the Instruments and Lights.
- Check if the machine can work normally.
- Add grease to Lubricating Oil Points daily.
- Tighten the Screws.

Safety Driving

Attention: Try your best to keep the machine in low loading to assure the stability.
When operating the arms with loading, the loader's Weight Core will be changed. So do not turn quickly or walk on the slope. When walking and turning quickly, always keep the arms down.
Keep Loading and Turning at the level earth.
When walking, down the arms and make the bucket some distance from the ground, to avoid the obstruction.



DANGER

When upper the arm, please do not Start or Turning quickly, otherwise it will make the machine turn over and cause serious deadly injure. Please operate carefully with slow speed.

7. CONTROLLING SYSTEM

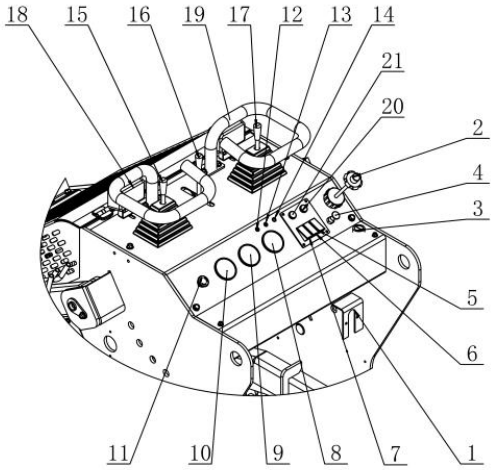

1	Electric Source Switch	2	Hand Throttle	3	Engine Start Switch
4	Choke Cable	5	Head Light Switch	6	Radiator Fan Switch
7	Horn Switch	8	Hour Meter	9	Oil Thermometer
10	Fuel Quantity Gauge	11	Emergency Stop Button	12	Oil Pressure Indicator
13	Radiator Fan Indicator	14	Electric Source Indicator	15	Left Handle
16	Attachment Handle	17	Right Handle	18	Headlight
19	Handrail	20	Cigar Lighter	21	USB Interface

(1) Electric Source Switch

Battery switch, the main power switch of the machine.

Attention: When the machine stop work, please cut the Power

(2) Hand throttle

Turn the hand clockwise to lower the engine speed, turn the hand anticlockwise to speed up.

(3) Engine Start Switch

When start the Engine, turn the key clockwise, after starting, simply release the key.

(4) Choke Cable

Pull up the choke cable and turn the engine start switch to start the engine, after starting, release the choke cable.

(5) Head Light Switch

Open: Pull the switch to turn on the head light.
OFF: Press the switch to turn off the head light.

(6) Radiator Fan Switch

Open: Pull the switch to turn on the radiator fan.
OFF: Press the switch to turn off the radiator fan.

(7) Horn Switch

Press the horn button to turn on the horn, release the button to stop the horn.

(8) Hour Meter

It is used to record the engine working time.



(9) Oil Thermometer

It shows the hydraulic oil temperature.



(10) Fuel Quantity Gauge

It indicates amount of fuel in fuel tank, “F” denotes full, “E” denotes empty, you should add fuel before finger gets to “E”.



(11) Emergency Stop Button

The main function of the button is to cut off the power supply to the loader by pressing the button in case of an emergency, causing the machine to stop working immediately. This can quickly avoid or reduce potential damage to people, machinery, or ongoing work, ensuring the safety of the operator and the machine.

(12) Oil Pressure Indicator

The indicator lights up when the engine oil pressure is low.

(13) Radiator Fan Indicator

Turn on the radiator fan, the indicator shine, it shows the radiator fan is working.

(14) Electric Source Indicator

Turn the start switch to “ON” the indicator shine, hour meter begin to record the total working time.

(15) Left Handle

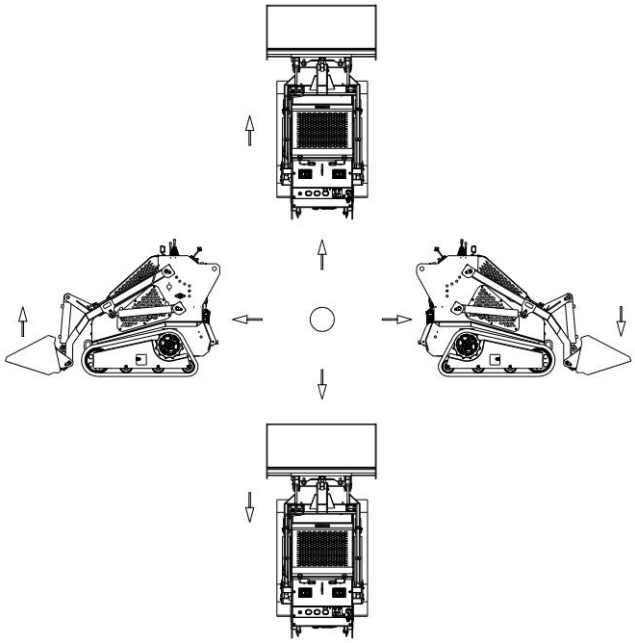

↑ Forward : Move the handle forward, the left side tires will move forward, the machine will turn right.

↓ Backward: Move the handle backward,. the left side tires will move backward, the machine will turn left.

→ Right: Moving the handle toward the right side of the machine will lower the lift arm.

← Left: Moving the handle toward the left side of the machine will raise the lift arm.

Warning: When lift the arm, the load capacity can not over the rated load capacity.

(16) Attachment Handle

Forward: Push the handle forward, the attachment cylinder extend.
Backward: Pull the handle backward, the attachment cylinder reset.
Middle: Attachment handle is on idle position, hydraulic pressure is relieved.

Warning: Do not attach or remove the hydraulic attachments unless the attachment handle is on middle position and the hydraulic pressure is relieved, otherwise the high temperature hydraulic oil will cause serious injure.

(17) Right Handle

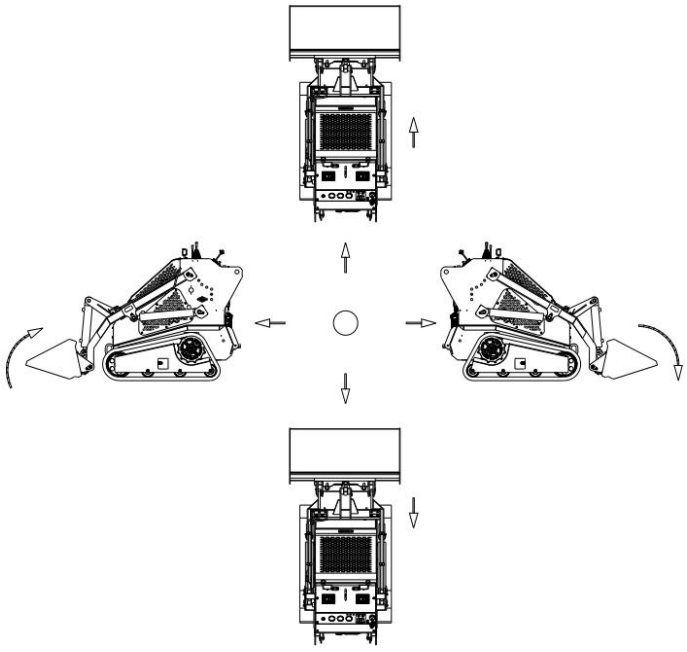

↑ Forward : Move the handle forward, the right side tires will move forward, the machine will turn left.

↓ Backward: Move the handle backward, the right side tires will move backward, the machine will turn right.

→ Right: Moving the handle toward the right side of the machine will dump the bucket.

← Left: Moving the handle toward the left side of the machine will curls the bucket backward the operator.

(18) Headlight

When the headlight switch is on, the front lamp lights up.

(19) Handrail

(20) Cigar Lighter

It supports USB and other devices to charge, and the cigarette lighter plug can light cigarettes.



(21) USB Interface

It supports USB and other devices to charge.

8. PREPARE BEFORE WORKING

Gather Information

A successful job begins before you start working. The fir st step in planning is reviewing information already available about the job and jobsite.

All Job

Review Job Plan

Review blueprints or other plans. Check for information about existing or planned structures, elevations, or proposed work that may be taking place at the same time.

Arrange For Traffic Control

If working near a road or other traffic area, contact local authorities about safety procedures and regulations.

Plan for Emergency Services

Have the telephone numbers for local emergency and medical facilities on hand. Check that you will have access to a telephone.

Ground-Penetrating Jobs

Notify One-Call Services

Call area One-Call or similar services and have existing lines located and marked. Call any utilities in your area that do not subscribe to One-Call.

Above-Ground Jobs

Locate Overhead Lines

Note location and height of all overhead lines in jobsite and ensure that fully lifted attachment and/or load will not touch l ines.

Inspect Site

Inspect jobsite before transporting equipment. Check for the following:

- Changes in elevation such as hills or other open trenches
- Obstacles such as buildings, railroad crossings, or streams
- Signs of utilities
- Traffic
- Access
- Soil type and condition

Identify Hazards

Identify safety hazards and classify jobsite if attachment will penetrate ground.
Jobsite hazards could cause death or serious injury. Use correct equipment and work methods. Use and maintain proper safety

NOTICE:

Wear personal protective equipment including hard hat, safety eye wear, and hearing protection.



Do not wear jewelry or loose clothing.
Notify One-Call and companies which do not subscribe to One-Call.
Comply with all utility notification regulations before digging or drilling.
Verify location of previously marked underground hazards.
Mark jobsite clearly and keep spectators away.

Remember, jobsite is classified by hazards in place - not by line being installed.

Classify Jobsite

Inspect Jobsite

Inspect jobsite and perimeter for evidence of underground hazards, such as:

- buried utility notices
- utility facilities without overhead lines
- gas or water meters
- junction boxes
- drop boxes
- light poles
- manhole covers

Select a Classification

Jobsites are classified according to underground hazards present.

If working...	**then classify jobsite as...**
within 10′(3 m) of a buried electric line	electric
within 10′(3 m) of a natural gas line	Natural gas
in sand, granite, or concrete which is capable of producing crystalline silica (quartz) dust	Crystalline silica (quartz) dust
within 10′(3 m) of a buried electric line	other

NOTICE: If you have any doubt about jobsite classification, or if jobsite might contain unmarked hazards, take steps outlined previously to identify hazards and classify jobsite before working.

Apply Precautions

Once classified, precautions appropriate for jobsite must be taken.

Electric Jobsite Precautions

Use one or both of these methods.
Expose line by careful hand digging or soft excavation.
Have service shut down while work is in progress . Have electric company test lines before returning them to service.

Natural Gas Jobsite Precautions

In addition to positioning equipment upwind from gas li nes, use one or both of these methods.
Expose lines by careful hand digging or soft excavation.
Have gas shut off while work is in progress. Have gas company test lines before returning them to service.

Crystalline Silica (Quartz) Dust Precautions

Follow other guidelines for exposure to crystalline silica when trenching, sawing or drilling through material that might produce dust containing crystalline silica (quartz).

Other Jobsite Precautions

You may need to use different methods to safely avoid other underground hazards. Talk with those knowledgeable about hazards present at each site to determine which precautions should be taken or if job should be attempted.

Check Supplies and Prepare Equipment

Supplies

Fuel
Key
Lubricants
Personal protective equipment, such as hard hat and safety glasses

Fluid Levels

Fuel

Hydraulic fluid
Battery charge
Engine oil

Condition and Function

Air filter, oil filter, hydraulic oil filter
Tyre
Pump and motor
Hoses and valve
Signs, Warning and shields

Accessories

If required, mount a fire extinguisher near the power unit but away from possible points of ignition. The fire extinguisher should always be classified for both oil and electric fires. It should meet legal and regulatory requirements.

9. *ATTACHMENT CONNECTION*

IMPORTANT: Use only approved attachments. Attachments can change the stability and operating characteristics of the unit.

Attachment

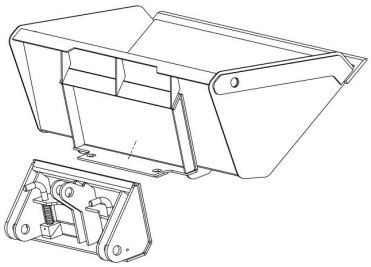

IMPORTANT: Before connecting attachment to unit, ensure that mount and receiver plates are free of dirt and debris.

1. Ensure that lock pin handles (shown) on mount plate are turned away from center of attachment.
2. Start engine.
3. Tilt mount forward.
4. Position mounts plate in the upper lip of the receiver plate on attachment.
5. Raise lift arms while tilting back mount plate.

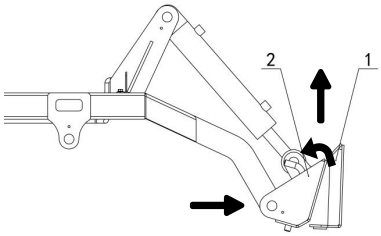

IMPORTANT: Attachment should be raised enough to clear the ground . Mount plate should be tilted backfully.

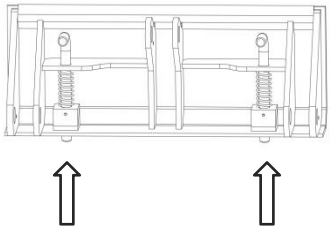

6. Ensure that all controls are in neutral position.
7. Turn ignition switch off and remove key.
8. Rotate lock pin handles toward center of mount plate to secure attachment to lift plate.

NOTICE: To ensure proper connection, verify that bottoms of lock pins are visible under attachment receiver plate.

HYDRAULIC HOSES

If attachment requires hydraulic power for working, please connect hydraulic hose.

⚠ **WARNING:** Fluid or air pressure could pierce skin and cause serious injury or death.Stay away.

NOTICE:

1. Escaping pressurized fluid can cause injury or pierce skin and poison.
2. Before disconnecting a hydraulic line, turn engine off and operate all controls (o relieve pressure. Lower, block, or support any raised component with a hoist.

Cover connection with heavy cloth and loosen connector nut slightly to relieve residual pressure. Catch all

3. fluid in a container.
4. Before using system, check that all connections are tight and all lines are undamaged.
5. Fluid leaks is hard to detect. Use a piece of cardboard or wood, rather than hands, to search for leaks.
6. Wear protective clothing, including gloves and eye protection.
7. If you are injured, seek immediate medical attention from a doctor familiar with this type of injury.



Hot parts may cause burns, Do not touch until cool.
Notice: Hydraulic couplers, hoses and fluid may be hot. Wear gloves when connecting and disconnecting hydraulic hoses and wait until unit has cooled before touching hydraulic components.



1. Cycle attachment drive control to relieve residual pressure at hydraulic couplers.
2. Ensure that al l controls are in neutral position.
3. Remove dirt and debris from hydraulic couplers.
4. Connect·male coupler on attachment to female coupler on unit.
5. Connect coupler on attachment to male coupler on unit.
6. Connect female coupler on case drain hose to case drain coupler on unit,if attachment requires it.
7. Ensure that connections are secure by pulling on hoses.

10. DRIVE

Start Engine

1. Ensure all controls are in neutral.
2. If necessary, choke cold engine.
3. Move throttle to half open.
4. Turn ignition switch to start position and release when engine starts.
5. Push in choke after engine is warm.

EMERGENCY SHUTDOWN: Turn ignition switch to STOP.

Drive General Operation.

1. Pull lift arm control to raise mount plate (and attachment) off ground.
2. Move both wheel drive controls to forward or reverse.
3. Adjust throttle as needed.

Slope Operation Guidelines

NOTICE: Keep attachment /load low when operating on a slope. Drive slowly and cautiously at all times.

Operate up and down slopes with heavy end of unit uphill. Weight distribution changes based on attachments and load. For example, and empty bucket makes the rear of the unit the heavy end while a full bucket makes the front of the unit the heavy end. Most We Can-approved attachments make the front of the unit the heavy end.

Avoid starting, stopping, or turning on slopes. If you must turn, keep the heavy end of the unit uphill.

Do not park unit on slope without lowering attachment to the ground, returning all controls to neutral position, turning ignition switch to STOP, and applying parking brake.

Shut Down

1. Lower lift arms to ground.
2. Move all controls to neutral position.
3. Run engine at low idle for three minutes to cool.
4. Turn ignition switch to STOP.
5. Remove key.

NOTICE: Unit should not be parking on a slope unless parking brake is engaged. Move all controls to neutral position when stopped.

 **WARNING**
When on slope, the angle of the fuel tank can not exceed 12°, otherwise the oil will spill out.

11. MACHINE STORAGE



Rinse Equipment

Spray water onto equipment to remove dirt and mud, especially at undercarriage.
NOTICE: Do not spray water onto operator's console. Electrical components could be damaged. Wipe down instead.
Open hood and remove debris from inside of unit. Remove mud from track or tyres.

Disconnect Attachment

1. Lower attachment to the ground.
2. Ensure that all controls are in neutral.
3. Turn off engine.
4. Disengage lock pins by turning handles away from center of attachment.
5. Cycle attachment drive control and disconnect hydraulic hoses, if used
6. Move the brake to nature position.
7. Start engine.
8. Tilt mount plate forward and back unit away from attachment.

Stow Tools

Make sure all tools and accessories are loaded on trailer.

12.SAFETY MAINTENANCE

Service Precautions

Warning: Incorrect procedures could result in death, injury, or property damage. Learn to use equipment correctly.
NOTICES: Unless otherwise instructed, all service should be performed with engine off.
Stop engine and apply parking brake before opening hood for inspection or service.
Allow engine should be cool before performing any service.
Refer to engine manufacturer's manual for engine maintenance instructions.
Before servicing equipment, lower the attachments to ground.

Working Under Raised Lift Arms



WARNING: Crushing weight could cause death, please follow proper procedures and use appropriate equipment or stay away.

NOTICE: Support both lift arms before working under raised lift arms.
Or keep away from the raised lift arms.

Warning: Explosion possible. Serious injury or equipment damage could occur. Follow directions carefully.



NOTICE:
Sparks can cause battery to explode.
Electronic components can be easily damaged.

Lubricants



Proper lubrication and maintenance protects equipment from damage and failure.
Service intervals listed are for minimum requirements. In extreme conditions, service machine more frequently. Use only recommended lubricants.

NOTICE:

Use only genuine parts, filters, and approved lubricants to maintain warranty. Use the “Service to record all required service to your machine record”

Position for Lubrication

Before working, please lubrication the position as the above pictures
To avoid dirty, before lubrication, please clean the dirty on the connections. If the pans damaged or lost,please change it on time
To avoid uncontrolled lubrication, please try to reduce the dirty.

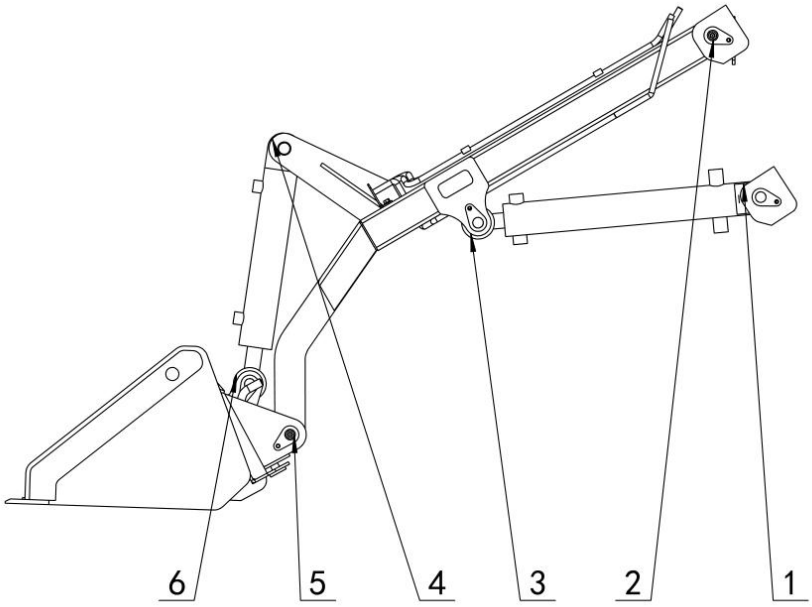

Chain Lubrication

Add lubrication oil to the chain from the inside and outside of the chain regularly, if the work condition is too poor to use the lubrication oil, can use grease lubrication instead.

Stratton Engine Oil Temperature Chart

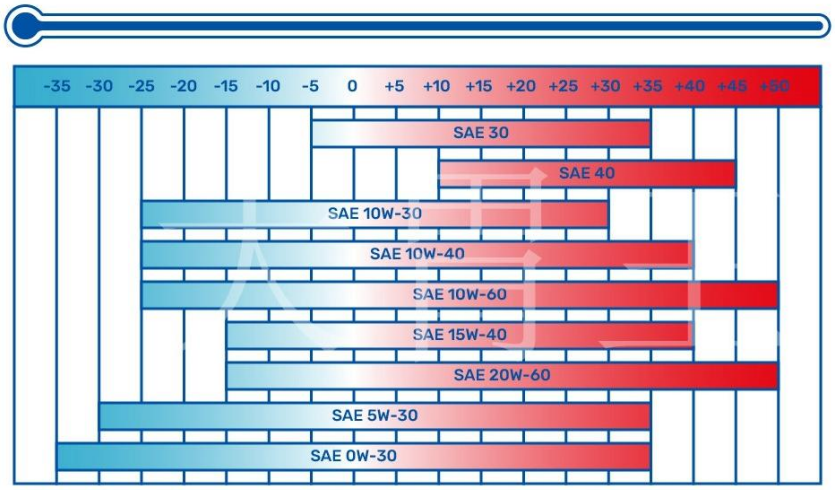

More info on engine lubrication and maintenance, see engine manufacturer manual.

10 Hour

Check Engine Oil Level

Check engine oil level at dipstick opening every 10 hours. Oil level should be at top of marking, if low, add 15w-40. Check with unit on level surface and at least 15 minutes

after stopping engine.



IMPORTANT: Use oil specified in “Engine Oil Temperature Chart”

Check Hydraulic Fluid Level

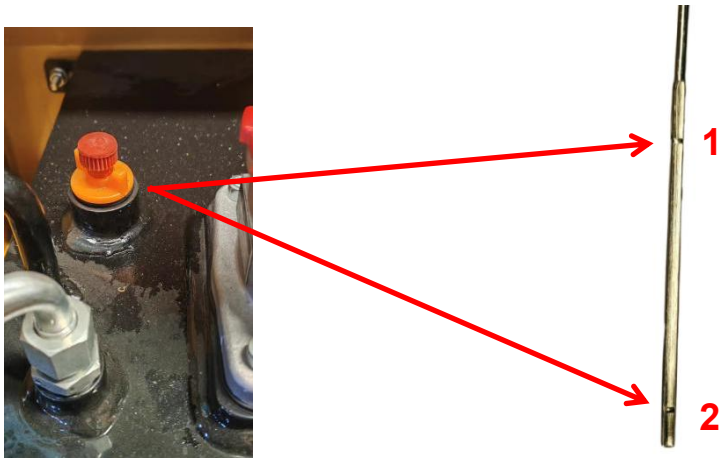

Check hydraulic fluid level every 10 hours. After engine is off and fluid is cool, keep fluid level between mark 1 and 2. If the level is low, add to the level of mark 1, but do not exceed mark 1.

Check hydraulic hoses for leaks every 10 hours.

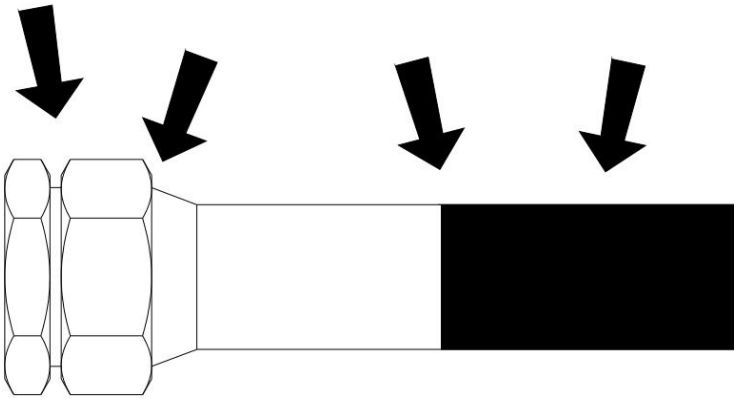

Warning: Fluid or air pressure could pierce skin and cause injury or death. Stay away.
Notice:

1. Escaping pressurized fluid can cause injury or pierce skin and poison.
2. Before disconnecting a hydraulic line, turn engine off and operate all controls to relieve pressure. Lower, block, or support any raised component with a hoist. Cover connection with heavy cloth and loosen connector nut slightly to relieve residual pressure. Catch all fluid in a container
3. Before using system, check that all connections are tight and all lines are undamaged.
4. Fluid leaks can be hard to detect. Use a piece of cardboard or wood, rather than hands, to search for leaks.
5. Wear protective clothing, including gloves and eye protection.
6. If you are injured, seek immediate medical attention form a doctor familiar with this type of injury.

50 Hour

Location	Task	Notes
Traction Unit	Check battery	
	Check drive belt	
	Check oil filter	
	Clean oil cooler	
	Change hydraulic oil filter	

Check Battery

Normal Battery: can be used for 10days- 15 days in Winter, and 5 days-6 days in Summer, then you should check the electrolyte, the method as below: disconnect the line on the battery, loose the ventilation plug, check the electrolyte in each unit, if the liquid level is below the lowest limited, please add the distilled water.

Maintenance-free Battery: check the battery every 50 hours, keep battery and terminals clean and free of corrosion. Check the hydrometer of hole shaped liquid regularly, its color (will be changed with the specific weight of the electrolyte, it can indicated the battery power status and the electrolyte level. When the hydrometer display green color, indicated the battery is normal with full power; when it display little green color or the color is

black, indicated the battery need to recharge; when it display light yellow color, indicated there is something wrong with the battery and need to be repaired or replacement.

Battery Storage: Storage the battery in the cool&well ventilated place, do not put the battery directly on the sun exposure, avoid moisture. Do not struck it with metal tool when installing, and do not put the metal tools on the battery.

Battery Install and Remove: Stop the Engine, pull out the key.

Firstly remove the negative cable and then remove the positive cable.

Loosen the mounting bolts, remove the battery.

Confirm the electrodes on battery.

When installing the battery, the method is opposite as remove.

Note: Make sure do not reverse the positive and negative.

Operation Notice: When operation, according to your working condition, ware the safety equipment, such as glasses and rubber gloves.

Be careful operation because there is battery acid.

If the acid touch your skin or cloths, please clean it immediately, otherwise it will cause serious injure or death.

Make the battery away from fire and heat.

The battery can only be used for starting the engine, otherwise it may cause damage to battery or fire.

Notice when use the battery in Winter: In winter, because of the lower temperature, the electrolyte will loose, it will low down the battery power supply, so it will much more difficult to start than in Summer.

Notice the leakage of the battery. Once you start the Engine, but failed, do not re-start it immediately, wait about one minute and let the battery storage voltage again and then re-start.

Notice: Please pay special attention to check the battery and circuit in winter.



WARNING: Explosion possible. Serious injury or equipment damage could occur. Follow directions carefully.

NOTICE:

- Battery gas can explode. Keep sparks and flames away from battery.
- Always remove negative (-) battery cable first and replace it last
- Battery electrolyte is sulfuric acid and poisonous. Will bum skin and cause blindness if splashed into eyes. Wash hands after working around battery.
- Never disconnect battery terminals with engine running. Voltage spike may occur and ruin electronic control modules or other components.

Clean Oil Cooler

Clean oil cooler every 50 hours. Clean more frequently if operating in dusty conditions. Clean with compressed air or low pressure water.

Notice: Be careful not to damage cooler fins.

Change Hydraulic Oil

Change hydraulic oil at 50 hours for the beginning using, then change every 250 hours.

100 Hour

Change Engine Oil

Change engine oil every 100 hours. Drain oil at drain plug (2) and add GEO 15w-40 at filler (1) until oil level is seen at marking.

IMPORTANT: Use oil specified in “Engine Oil Temperature Chart”

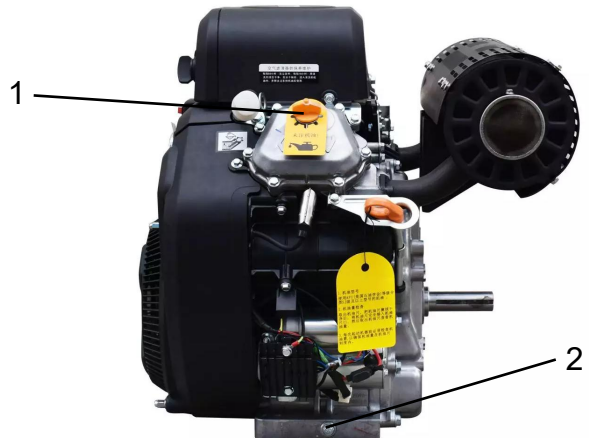

200 Hour

Check spark plugs and gap

Notes: See engine operator’s manual for instructions.

Change Oil Filter

Change oil filter every 200 hours.

250 Hour

Location	Task	Notes
Traction Unit	Change hydraulic fluid filter	
	Check inner element	

Change Hydraulic oil filter (see below picture 1) every 250 hours.

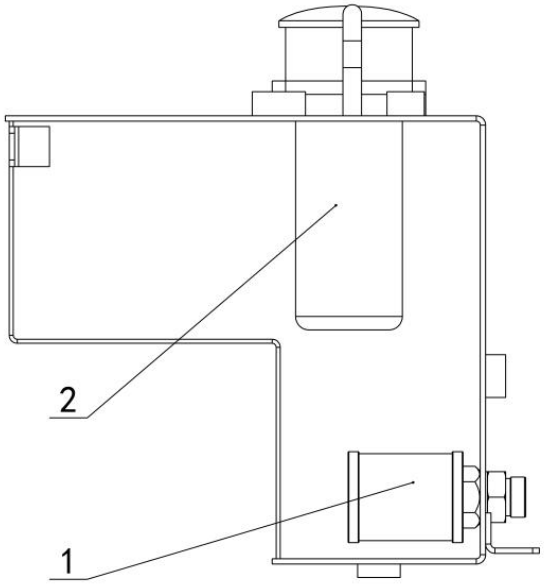

Change Hydraulic oil return filter (see above picture 2) every 250 hours.

500 Hour

Change Hydraulic Oil

Change hydraulic fluid every 500 hours. Drain fluid at drain port 1 and add hydraulic oil from port 2 until fluid level is between the mark 1 and 2 on the oil gauge.

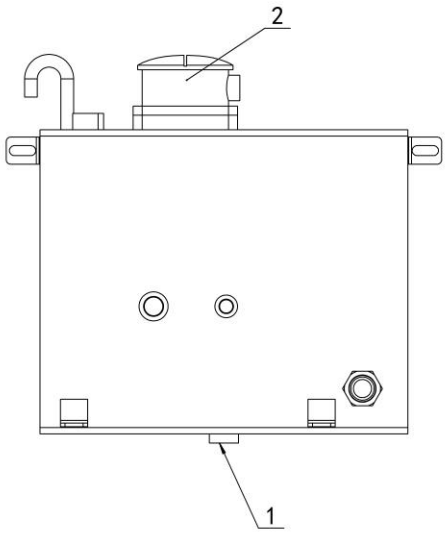

Jump Start Unit

Warning: Incorrect procedures could result in death, injury, or property damage. Use equipment correctly.

1. Park on level area.
2. Put all drive controls in neutral
3. Lower all emptied attachments.
4. Turn off all electrical loads.
5. Turn off engine and remove key from ignition.

6. Block wheels or tracks.



Warning: Explosion possible. Serious injury or equipment damage could occur. Be careful operation.

Notices:

1. Lead-acid batteries vent explosive hydrogen gas when charging.
2. Do not smoke, create sparks, or use flames around batteries.
3. Never lean over battery when making connections.
4. Do not allow vehicles to touch when jump starting.
5. Wear eye protection and remove metal jewelry and watches.
6. Do not attempt to jump start a battery that is leaking, bulging, heavily corroded, frozen, or otherwise damaged.
7. Never short-circuit battery terminals for any reason.
8. Never hammer on battery posts or cable terminals.

Before You Start

Electronic components can be easily damaged by electrical surges. Jump starting can damage electronics and electrical systems, and is not recommended except in extreme circumstances. Use quality large diameter jumper cables capable of carrying high currents (400 amps or more). Cheap cables may not allow enough current flow to start a dead/ discharged battery.

Read all steps thoroughly and review illustration before performing procedure.

DECALS

DANGER Moving digging teeth will kill you or cut off arm or leg. Stay away.

DANGER Turning shaft will kill you or crush arm or leg. Stay away.

DANGER Electric shock. Contacting electric lines will cause death or serious injury. Know location of lines and stay away.

DANGER Deadly gases. Lack of oxygen or presence of gas will cause sickness or death, provide ventilation.

WARNING Jobsite hazards could cause death or serious injury. Use correct equipment and work methods. Use and maintain proper safety equipment.

WARNING Crushing weight could cause death or serious injury. Use proper procedures and equipment or stay away. Moving parts could cut off hand or foot. Stay away.

WARNING Explosion possible. Serious injury or equipment damage could occur. Follow directions carefully.

WARNING Incorrect procedures could result in death, injury, or property damage. Learn to use equipment correctly.

WARNING Improper control function could cause death or serious injury. If control does not work as described in instructions, stop machine and have it serviced.

WARNING Looking into fiber optic cable could result in permanent vision damage. Do not look into ends of fiber optic or unidentified cable.

WARNING Fluid or air pressure could pierce skin and cause injury or death. Stay away.

WARNING Runaway possible. Machine could run over you or others. Learn how to use all controls. Start and operate only from

WARNING Fire or explosion possible. Fuels could ignite and cause burns. No smoking, no flame, no spark.

WARNING Moving traffic - hazardous situation. Death or serious injury could result. Avoid moving vehicles, wear high visibility clothing, post

appropriate warning signs.

CAUTION Flying objects may cause injury. Wear hard hat and safety glasses.

CAUTION Hot parts may cause burns. Do not touch until cool.

CAUTION Exposure to high noise levels may cause hearing loss.Wear hearing protection.

CAUTION Fall possible. Slips or trips may result in injury. Keep area clean.

CAUTION Battery acid may cause burns. Avoid contact.

CAUTION Improper handling or use of chemicals may result in illness, injury, or equipment damage. Follow instructions on labels and Emergency Procedures in material safety data sheets (MSDS).

Emergency Procedures

Before operating any equipment, review emergency procedures and check that all safety precautions have been taken.
EMERGENCY SHUTDOWN- Press the urgent switch to STOP.

Electric Strike Description

When working near electric cables, remember the following:

- Electricity follows all paths to ground; not just path of least resistance.
- Pipes, hoses, and cables will conduct electricity back to all equipment.
- Low voltage current can injure or kill. Almost one-third of work-related electrocutions result from contact with less than 440 volts.
- Most electric strikes are not noticeable, but indications of a strike include: power outage smoke explosion popping noises arcing electricity.

If an Electric Line is damaged

If you suspect an electric line has been damaged and you are on tractor, DO NOT MOVE. Remain on tractor and take the fol lowing actions.The order and degree of action will depend upon the situation.
Warn people nearby that an electric strike has occurred. Instruct them to leave the area and contact utility.

- Raise attachments and drive from immediate area.
- Contact utility company to shut off power.
- Do not return to jobsite or allow anyone into area until given permission by utility company.

If you suspect an electric line has been damaged and you are off tractor, DO NOT

TOUCH TRACTOR. Take the following actions. The order and degree of action will depend upon the situation.

- LEAVE AREA. The ground surface may be electrified, so take small steps with feet close together to reduce the hazard of being shocked from one foot to the other. For more information, contact your Ditch Witch dealer.
- Contact utility company to shut off power.
- Do not return to jobsite or allow anyone into area until given permission by utility company.

If a Gas Line is damaged

If you suspect a gas line has been damaged, take the following actions. The order and degree of action will depend on the situation.

- Immediately shut off engine(s), if this can be done safely and quickly.
- Remove any ignition source(s), if this can be done safely and quickly. Warn others that a gas line has been cut and that they should leave the area. Leave jobsite as quickly as possible.
- Immediately call your local emergency phone number and utility company. If jobsite is along street, stop traffic from driving near jobsite.
- Do not return to jobsite until given permission by emergency personnel and utility company.

If a Fiber Optic Cable is damaged

Do not look into cut ends of fiber optic or unidentified cable. Vision damage can occur.

If Machine Catches on Fire

Perform emergency shutdown procedure and then take the following actions. The order and degree of action will depend on the situation.

- Immediately move battery disconnect switch (if equipped) to disconnect position.
- If fire is small and fire extinguisher is available, attempt to extinguish fire.
- If fire cannot be extinguished, leave area as quickly as possible and contact emergency personal.