# H12RMINI CRAWLER EXCAVATOR

## OPERATION & MAINTENANCE MANUAL




## AGT INDUSTRIAL

sales@agrotkindustrial.com https://www.agrotkindustrial.com/

# Preface

**Chapter I Usage Features and Performance Parameters of H12RExcavators**

Section I Usage and features

Section II Main performance parameters

**Chapter II Basic Structures and Work principle of H12RExcavato**

**rs** Section I Overview

Section II Work principle

Section III Basic structure of mechanical system

Section IV Basic structure of hydraulic system

**Chapter III Service Technologies of H12RExcavato**

**rs** Section I Basic construction knowledge

Section II Preparation for work

Section III Operational essentials

Section IV Operational precautions

**Chapter VI Maintenance of H12RExcavato**

**rs** Section I Daily inspection

Section II Periods of overhaul, medium and minor repair

**Chapter VII Troubleshooting of H12RExcavator**

Section I General

Section II Troubleshooting of mechanical system

Section III Troubleshooting of hydraulic system

Section IV Troubleshooting of electrical control system

Section V Troubleshooting of engine

Section VI Other

**Attachment: BOM List of H12RParts**

**As product improvements, technical data and parameters is likely to change.**

# Chapter I Usage Features and Performance Parameters of H12R Excavators

## Section I Usage and features

**H12R Excavators** are provided with excavating, crushing, ditch cleaning, drilling and bulldozing, with their attachments quick hitched and thus its utilization up greatly. In addition, they are easy to operate and transport and flexible to work at narrow site.

**H12RExcavators, hydraulic type with single bucket**

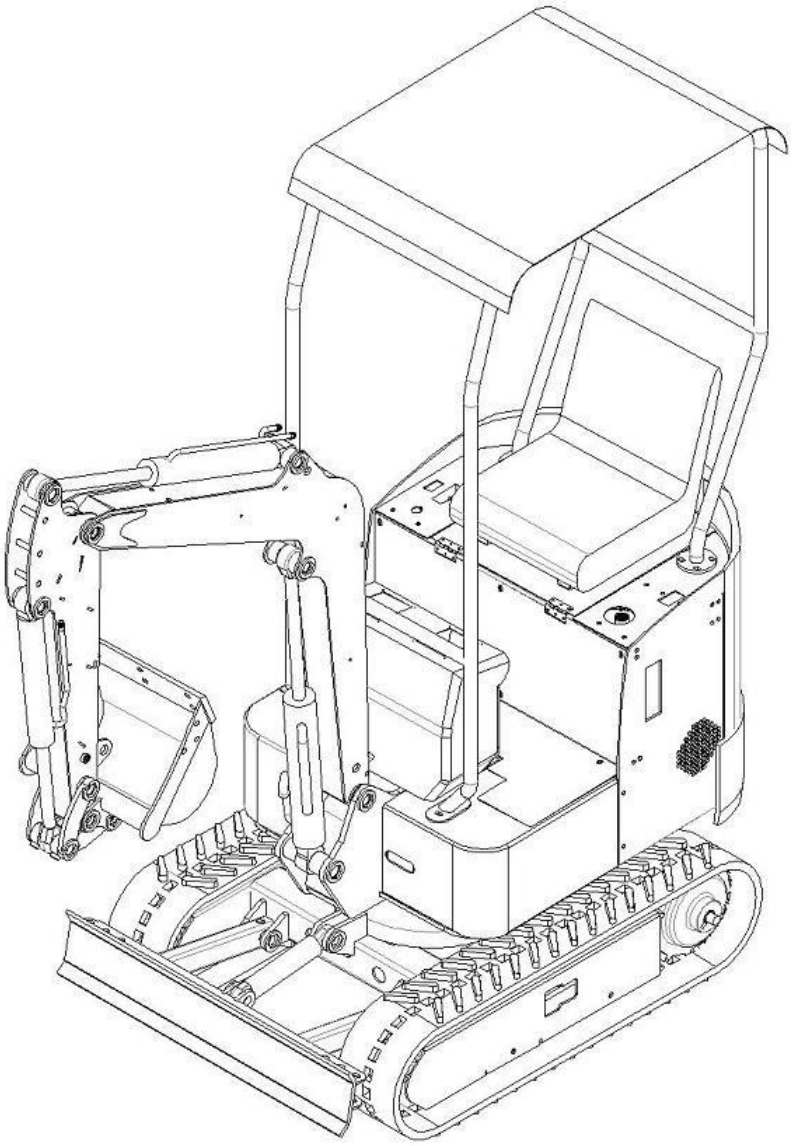

This type of excavators are mainly applied to: farming, landscaping, ditching and fertilization in garden, vegetable greenhouse, agricultural transformation, indoor demolition, small earthwork, civil engineering, road recovery, basement and indoor construction, concrete breaking, burying of cable, laying of water supply line, garden cultivation, desilting and others.

The excavator are equipped with KOOP/KUBOTA/CHANGCHAI Diesel Engine or RATO Gasoline Engine.

Excavators are able to equipped with multiple work equipment, such as quick hitch, log grapple, ripper, leveling bucket, auger and narrow bucket, as well as optional roof, radiator and others, so as to meet your needing.

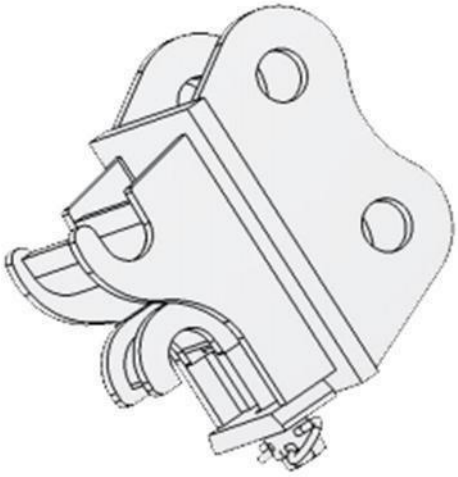

Quick hitch

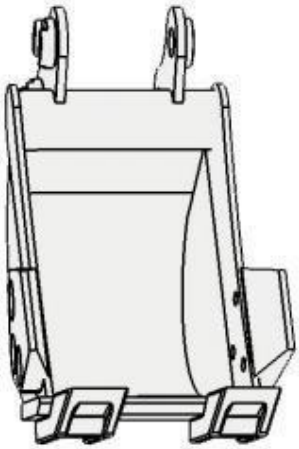

Narrow bucket



Log grapple

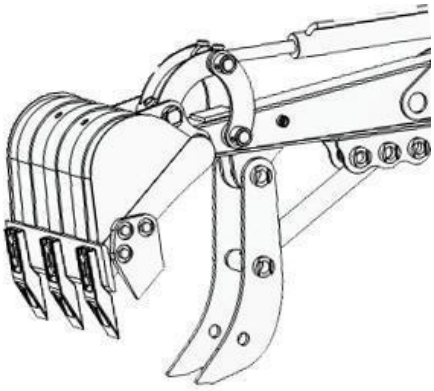

Mechanical thumb



Auger



Ripper



Rake

## Section II Main performance parameters

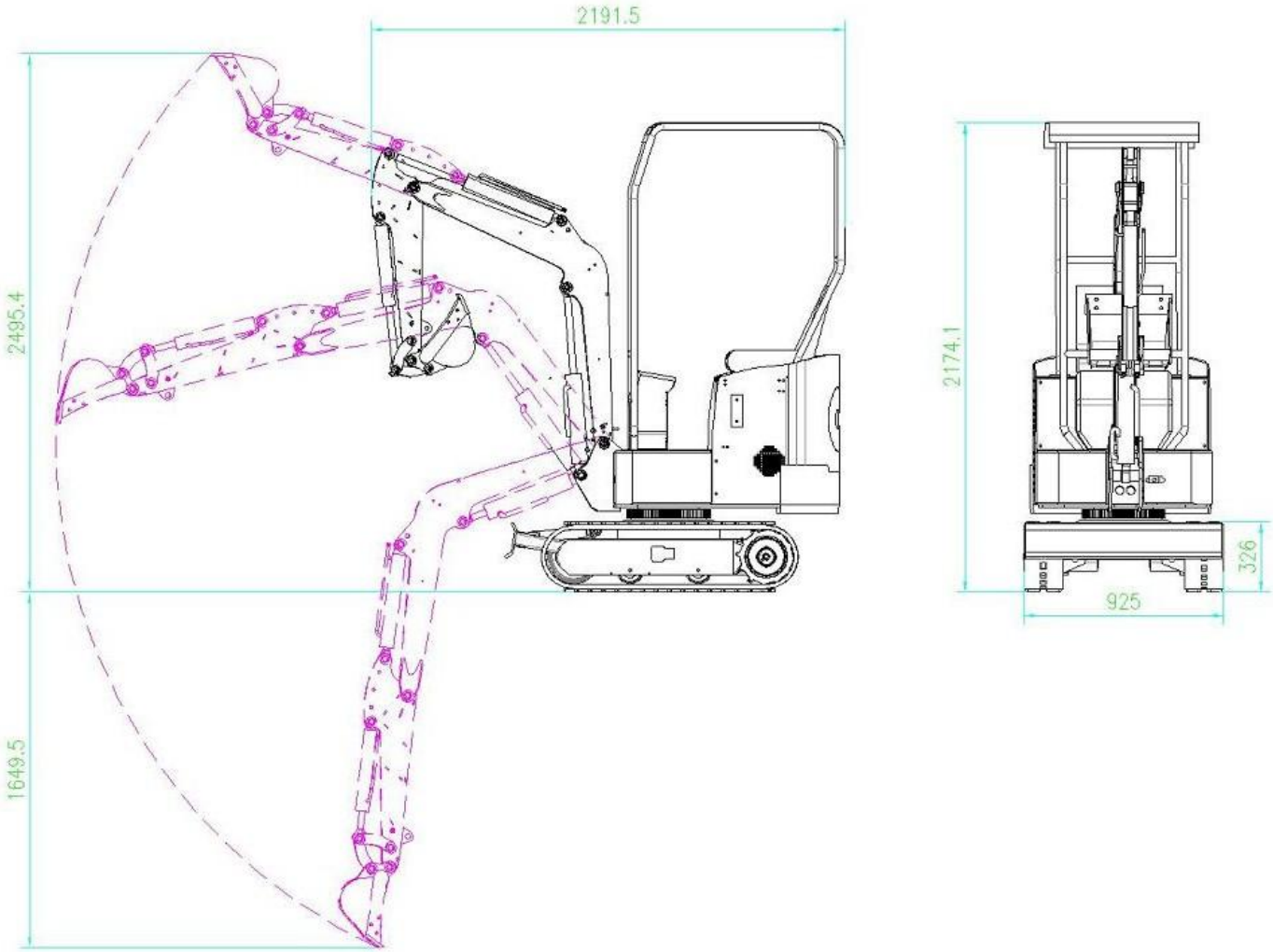

# Chapter II Basic Structures and Work Principle of H12RExcavators

## Section I Overview on H12Rexcavators

H12Rexcavator is composed of power train, work equipment, swing mechanism, control mechanism, drive system, traveling mechanism and auxiliary equipment, as shown in fig. 1-1. Mounted on the rotary table are the regular full-swing type hydraulic excavators, main components of drive system, swing mechanism and auxiliary devices, which are referred to as upper rotary. Therefore, a H12Rexcavator is divided into work equipment, upper rotary and traveling mechanism.

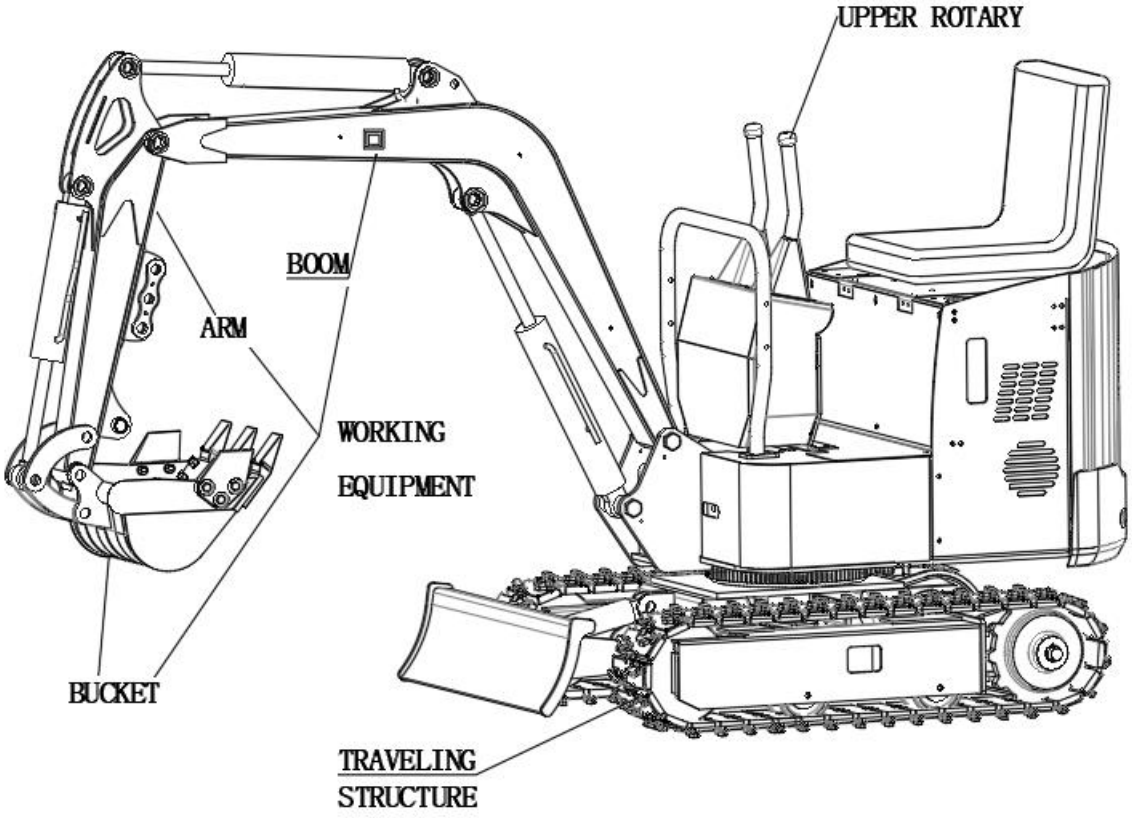

## Section II Work principle of excavators

Diesel engine changes the chemical energy of diesel into mechanical energy that is then altered with hydraulic gear pump to hydraulic energy that is distributed to each actuating element (such as hydraulic cylinder, swing motor and traveling motor). After that, each actuating element transform the hydraulic energy back to mechanical energy, driving the work equipment and running the complete machine.

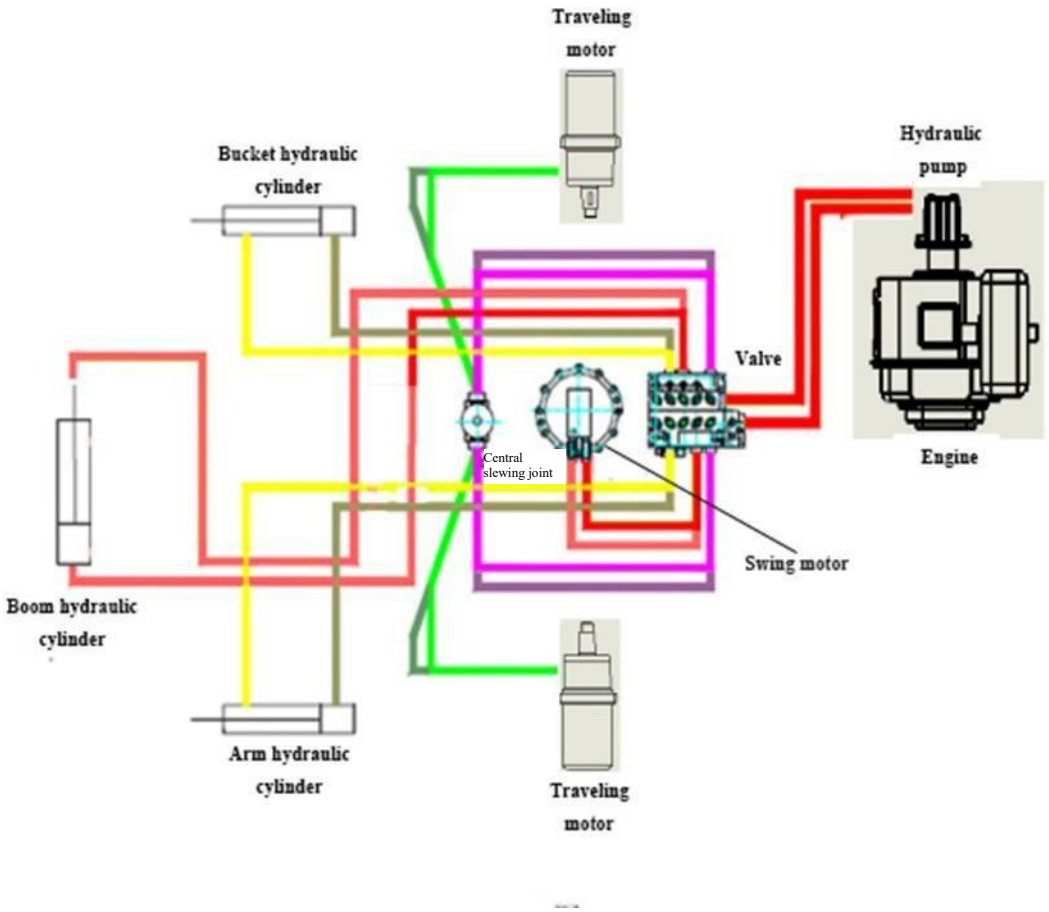


**Movement and power transmission route of excavator shown below:**

1. Traveling power route: diesel engine —— coupler —— hydraulic pump (mechanical energy changed to hydraulic energy) —— distributor valve —— central swing joint —— traveling motor (hydraulic energy changed to mechanical energy)—— sprocket —— rubber crawler—— starting of traveling

2. Swing power route: diesel engine —— coupler —— hydraulic pump (mechanical energy changed to hydraulic energy) —— distributor valve—— swing motor (hydraulic energy changed to mechanical energy) —— slewing bearing —— realizing of wing

3. Boom power route: diesel engine —— coupler —— hydraulic pump (mechanical energy changed to hydraulic energy) —— distributor valve —— boom cylinder (hydraulic energy changed to mechanical energy)——boom movement

4. Arm power route: diesel engine —— coupler —— hydraulic pump (mechanical energy changed to hydraulic energy) —— distributor valve —— arm cylinder (hydraulic energy changed to mechanical energy) —— arm movement

5. Bucket power route: diesel engine ——coupler —— hydraulic pump (mechanical energy changed to hydraulic energy) —— distributor valve —— bucket cylinder (hydraulic energy changed to mechanical energy) —— bucket movement

## Section III Basic structure of H12Rexcavators mechanical system

### 1 Power system

H12Rexcavator is equipped with single-cylinder air-cooling diesel/gasoline engine, include KOOP/ CHANGCHAI or RATO Engine. The KUBOTA engine is three-cylinder water-cooling engine, which is made by Japan

### .2 Drive system

H12Rexcavator's drive system could transfer the output power from engine through the hydraulic system to work equipment, swing mechanism and traveling mechanism.

### 3 Swing mechanism

Swing mechanism could turn the work equipment and upper rotary leftwards and rightwards, so as to do the excavating and the unloading. H12Rexcavator's swing mechanism has to fix the rotary table onto frame and has it swing flexibly, without any inclining risk. Therefore, H12Rexcavator is equipped with a slewing support (supports) and a slewing drive (power of turntable slewing), which are called by a joint name as swing mechanism.

3.1 Slewing support

H12Rexcavator has its rotary table supported with a rolling bearing, realizing the swinging of upper rotary.

3.2 Rotary drive

H12Rexcavator adopts the direct drive type. Namely, the output shaft of low-speed high-torque hydraulic motor is mounted with a driving pinion which meshes with the slewing gear ring.

### 4 Traveling mechanism

Traveling mechanism supports the complete weight of excavator and drives it to run.

H12Rexcavator has the crawler traveling mechanism similar to other crawlers, with one hydraulic motor drives one track. This excavator adopts low-speed high-torque motor. When two hydraulic motors run in the same direction, this machine goes straightly forward; when one motor is supplied with oil and the other is braked, excavator steers around the braked track; when two motors runs reversely, excavator rotates as circle.

Each part of traveling mechanism is mounted on integral traveling frame. The pressure oil from hydraulic pump goes through the multi-way directional valve and the central swing joint into the hydraulic traveling motor that changes the pressure energy into output torque that then goes to sprocket, driving excavator to run.

H12Rexcavator’s sprockets are integral castings and able to correctly engage with track, featuring balance drive. Sprockets located at rear part of excavator, shortening the tensioner part and relieving the track abrasion, wear and power consumption. Each track is equipped with a tensioner, adjusting the tracking tension and reducing the track vibration noise, abrasion, wear and power loss.

### 5 Work equipment

The hydraulic excavator could install multiple working equipment, 200mm bucket and ripper are most popular.

The boom, arm and bucket are articulated with each other, as shown in figure and swing around their articulated points respectively with aid of the hydraulic cylinder, to finish the excavating,lifting and unloading.

5.1 Boom

As the main component of backhoe work equipment, the integrated skewed boom is adopted on H12R excavator.

Being of the most popular type at present, skewed boom could allow excavator to dip deeper and to lower the unloading depth, satisfying the backhoe requirements.

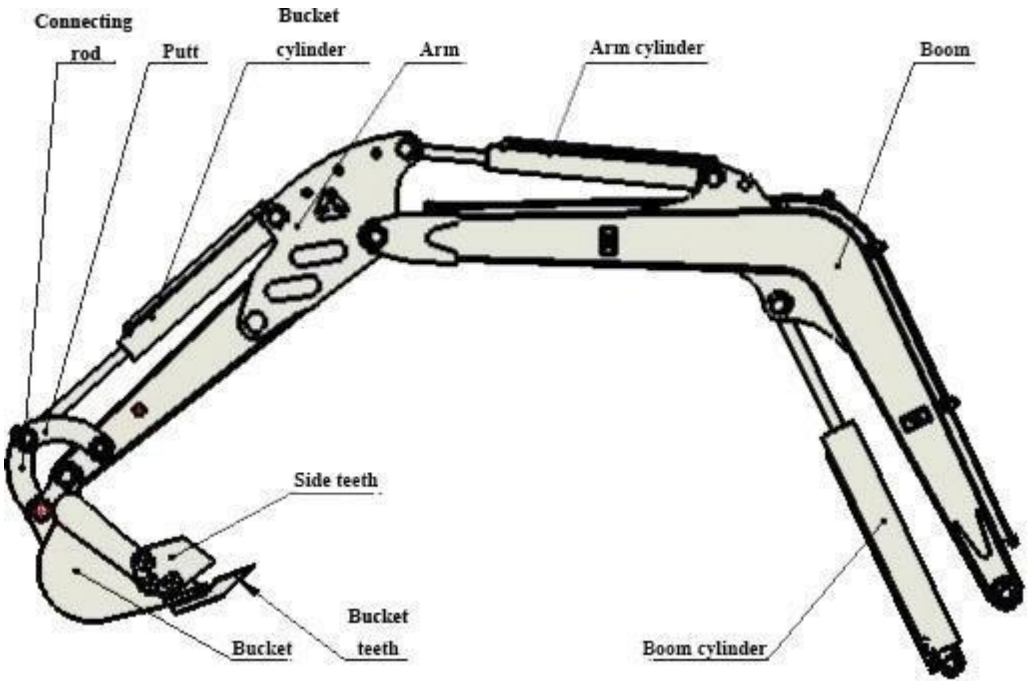


5.2 Bucket

5.2.1 Basic requirements

1) The longitudinal profile of bucket meets the law of motion of various materials at inside of bucket, facilitating the material flow and minimizing the loading resistance and thus fulfilling the bucket.

2) Bucket teeth are mounted to increase the linear specific pressure of bucket onto material, with unit cutting resistance relatively low and easing to cut in and break soil. In addition, the teeth are resistant to wear and easy to replace.

3) The load is easy to get off, shortening the unloading time and increasing the effective capacity of bucket.

5.2.2 Structure

Bucket shape and size for backhoe are highly related to work objects. In order to meet various excavation, one excavator could be equipped with multiple types of buckets.

Connection between bucket and hydraulic cylinder is of linkage mechanism, with bucket directly articulated with hydraulic cylinder, which drops the rotation angle of bucket but enables the working torque to change greatly.

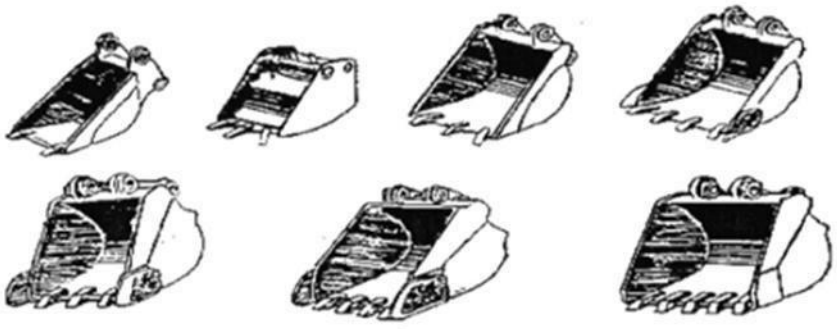

Bucket type

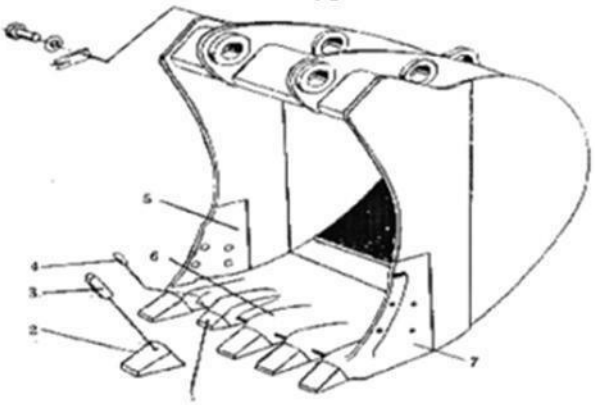

Bucket structure

**Hydraulic system structure of H12Rexcavators** I. Rotary motor

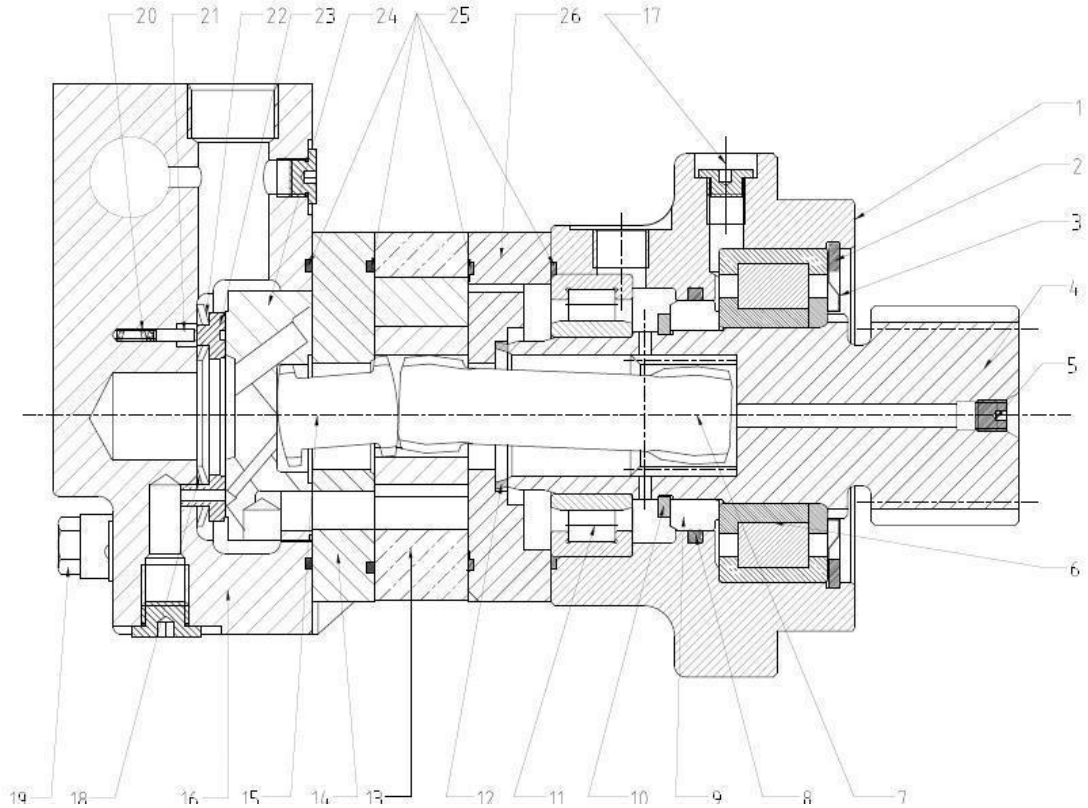

II. Main pump

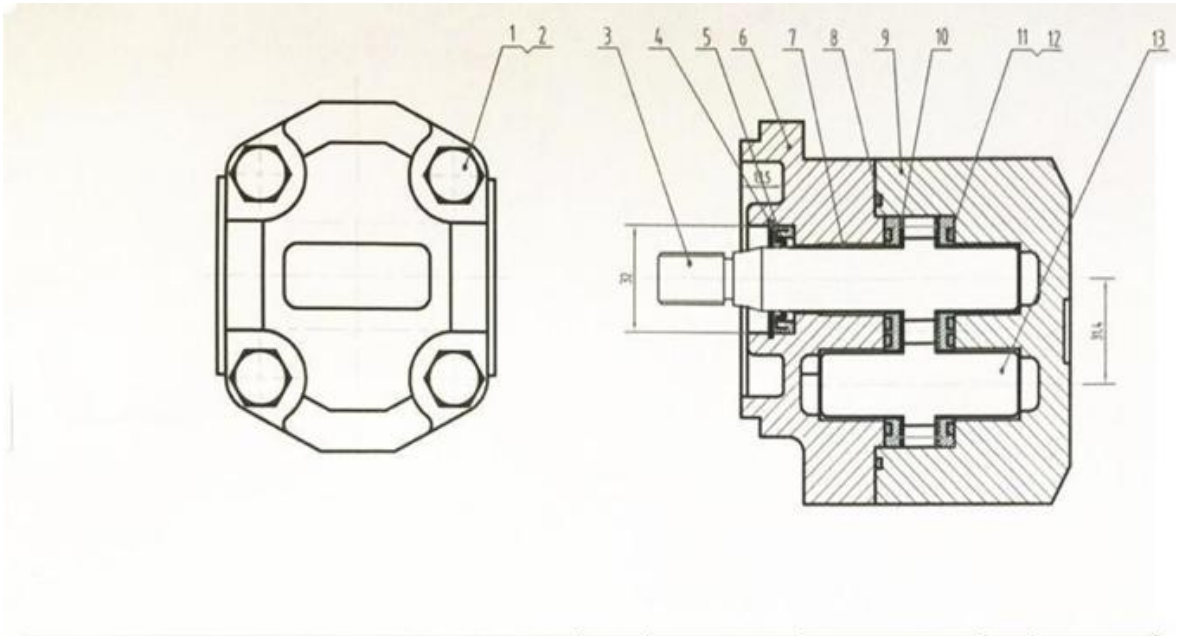


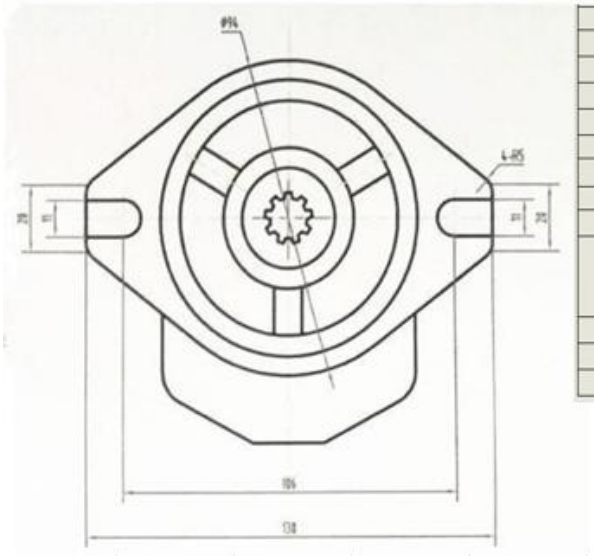

| | | | | |
|---|---|---|---|---|
| 1 | GB75-85 | bolt M10x65-10.9 | 4 | 40Cr |
| 2 | GB93-87 | gasket 10 | 4 | 65Mn |
| 3 | DHP006-01 | driving gear shaft | 1 | 20CrMnTi |
| 4 | GB893.1-86 | ring 32 | 1 | 65Mn |
| 5 | oil seal | NY19x32x7 | 1 | Combine parts |
| 6 | DHP006-02 | front cover | 1 | QT450-10 |
| 7 | DU bearing | Ø21x Ø19x20 | 4 | Combine parts |
| 8 | DHP006-03 | RECTANGULAR RING | 1 | Rubber L-4 |
| 9 | DHP006-04 | pump casing | 1 | QT450-10 |
| 10 | DHP006-05 | lateral plate | 1 | 25copper-base powder metallurgy material |
| 11 | DHP006-06 | Ear gasket | 2 | Rubber L-4 |
| 12 | DHP006-07 | Ear shape block slice | 2 | nylon |
| 13 | DHP006-08 | driven gear | 1 | 20CrMnTi |

**Traveling motor**

Disc Valve Motors--- BM series -005 and -006

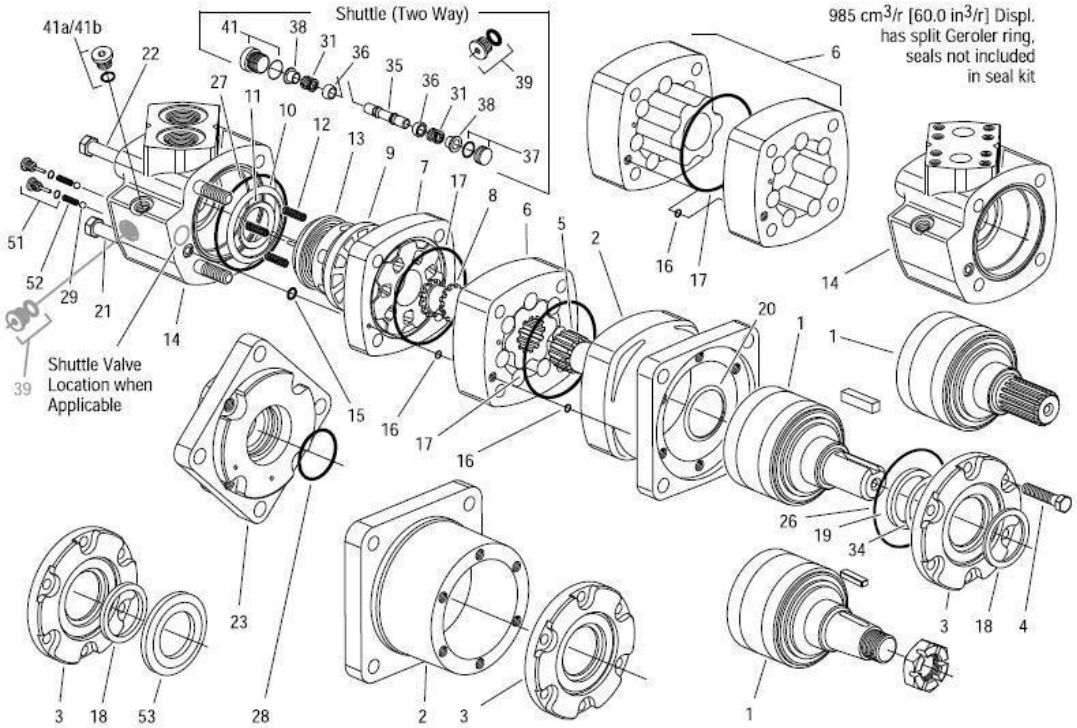

## Section IV Schematics of main valve

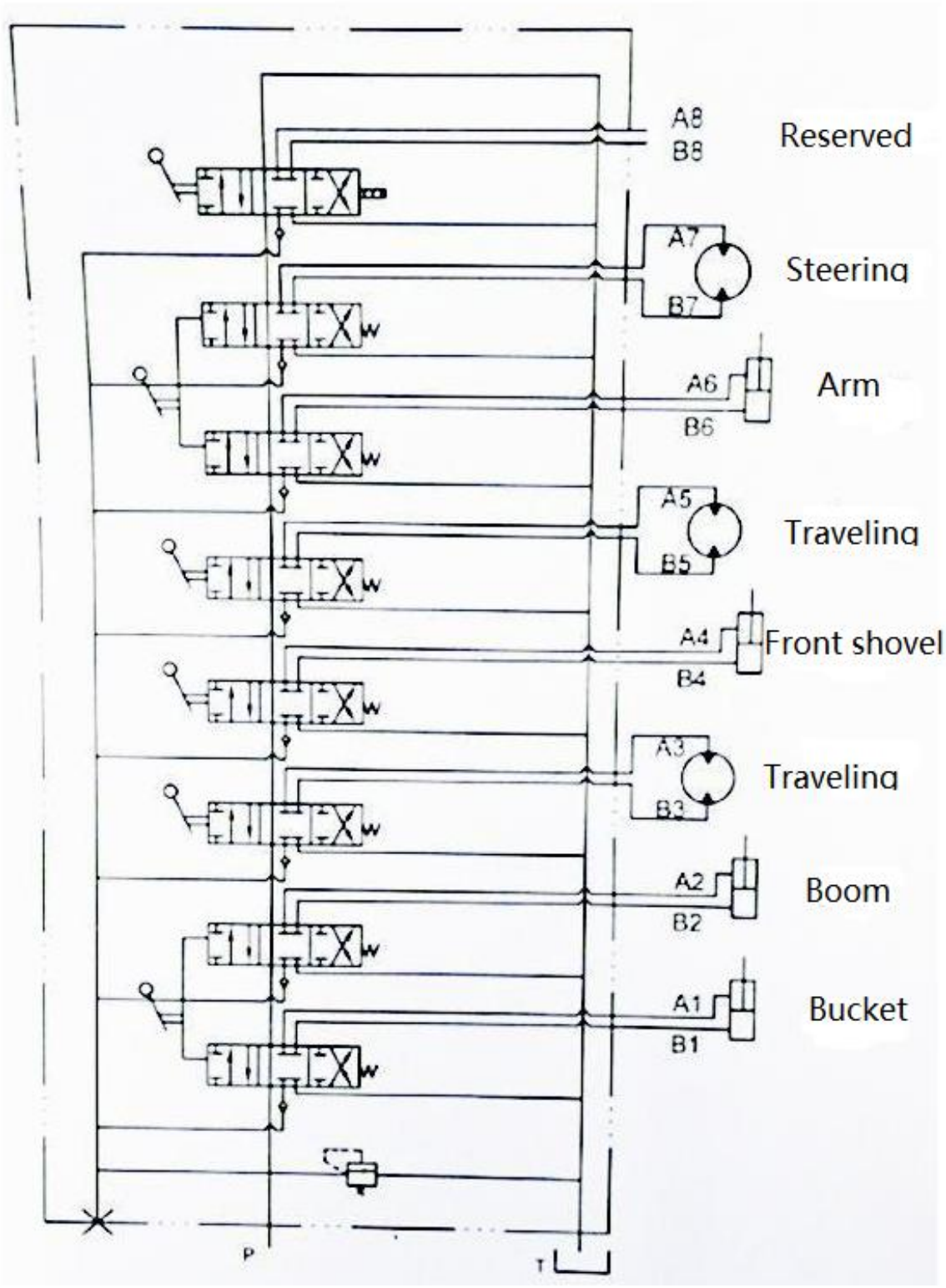

## Section V. Electrical system diagram

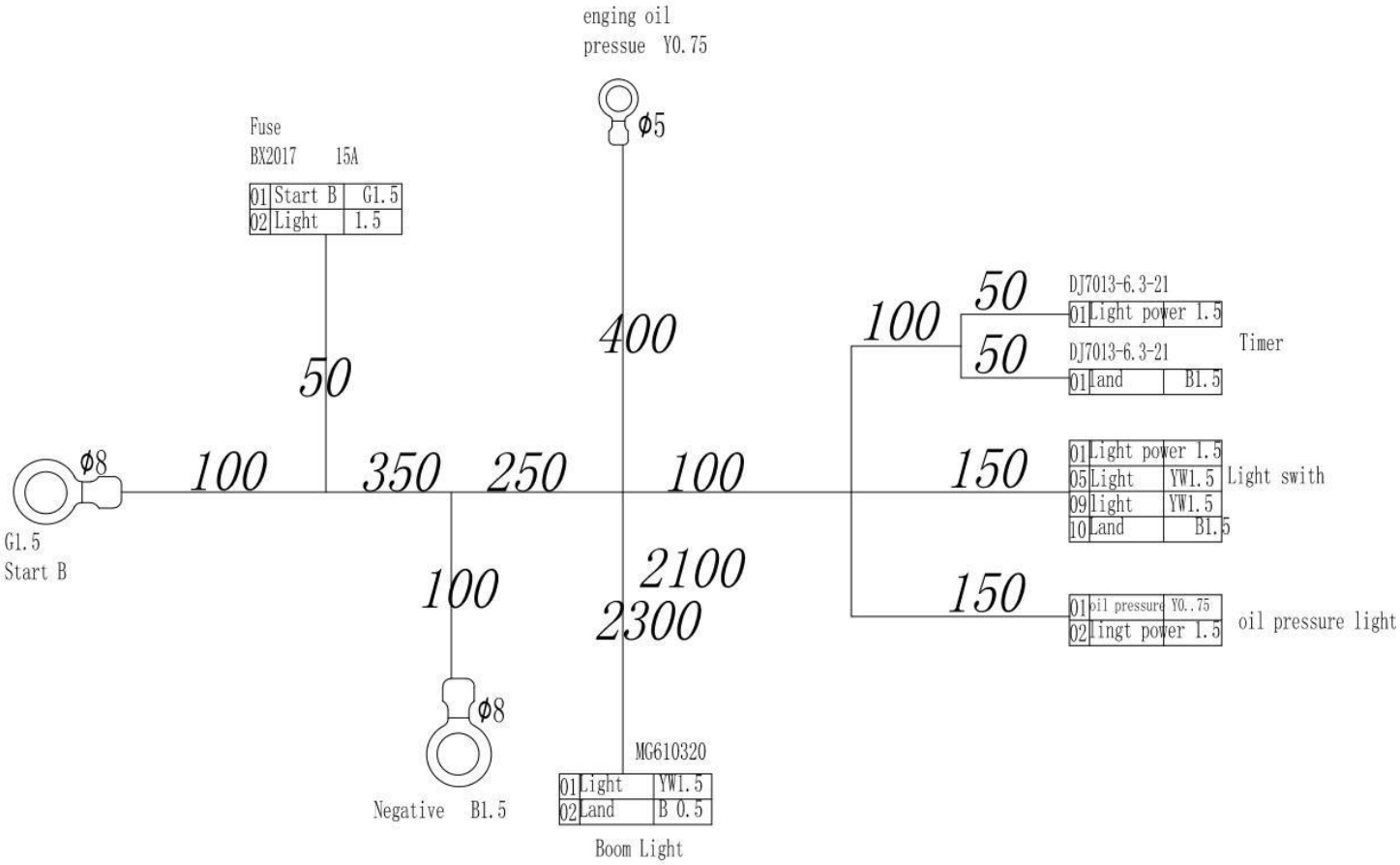


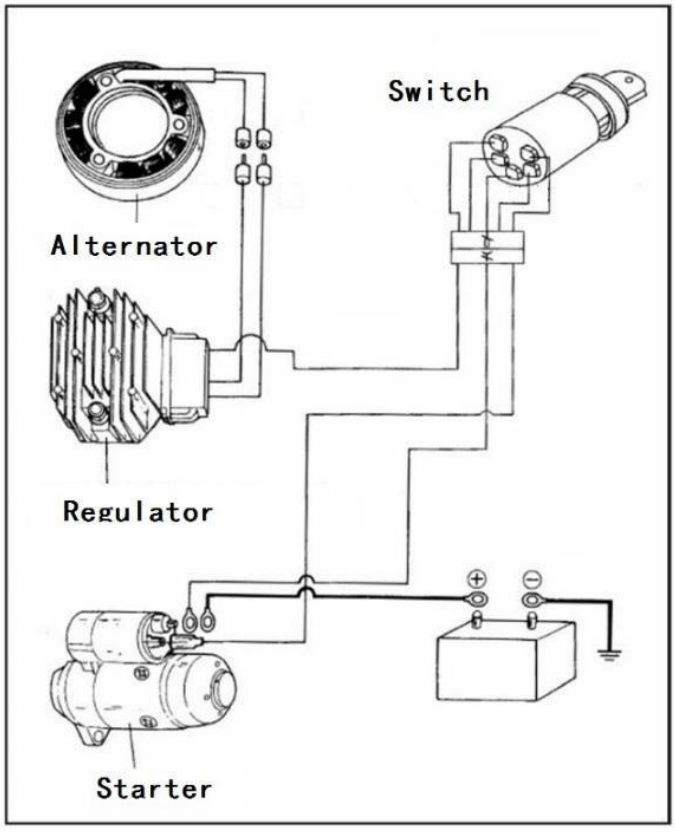

# Chapter III Service Technologies of H12RExcavators

Being of high temperature and pressure, the hydraulic oil temperature of H12Rexcavator can high to 85℃, the engine silencer temperature can high to 700℃ and pressure can high to 16-18Mpa. Therefore, the operators should be specially trained to obtain the proper certificates and to be familiar with the contents in this manual before the operations. In addition, maintenance and repair of excavator should be strictly in line with regulations to avoid any accident.

## Section I Basic construction knowledge

There are four basic movements: bucket rotation, arm stretching / backing, boom lifting / lowering and turntable swinging.

In general, pulling/pushing of hydraulic cylinder and rotation of hydraulic motor is controlled with three-way axial slide valve through the oil-flow direction and the work speed is controlled by operator or auxiliary devices according to the quantitative system and the valve openness.

1.1 Basic requirements on control system

Basic requirements on control system include:

1) Control system should be centralized in the driving area of upper rotary and satisfy the man-machine requirements. For example, controllers and driver seat should be designed according to 160-180 cm for males and 150-170 cm for females.

2) Startup and stop should be steady, with its speed and strength in control. At the same time, the combine actions should be also in control.

3) Easy, handy and visual operations In general, the operational force on handle does not exceed 40～60 N and handle travel does not exceed 17cm.

4) Control mechanism should minimize the deformation of its lever, as well as the inside clearance and the idle travel.

5) Ensure the operational performance does not change in -40～50℃.

## Section II Preparation for work

**1. Inspection before startup**

In order to prolong its service span, check the following before startup:

①. Check if there is dirt around or below machine, bolts loosened, any oil leaked and if any part damaged or worn.

②. Check if all switches, lamps and fuse box could work normally.

③. Check if the work equipment and hydraulic parts could work normally.

④. Check if all engine oil levels and fuel level are proper.

The above should be checked normal; otherwise engine cannot be started up until they are checked normal after troubleshooting.

**2. Maintenance before startup**

Before startup each shift, it is needed to grease the work equipment and the slewing bearing.

**3. Preheating of machine on cold days**

If it is cold, engine is difficult to start up, fuel may be frozen and hydraulic oil may increase its viscosity. Therefore, selection of fuel should be dependent on environment temperature.

**When hydraulic oil is less than 25℃, it is needed to preheat the machine before any work; otherwise machine may not respond or react very quickly, leading to severe accident.**

Therefore it is needed to preheat machine if it is cold:

①. Adjust the manual accelerator to have engine run at medium speed, and then slowly move bucket forth and back for 5min.

**Caution: do not operate other actuators than the bucket.**

②. Adjust the manual accelerator to have engine run at high speed, and then move the boom, the arm and the bucket for 5-10min.

**Caution: operations are merely limited on boom, arm and bucket, instead of any slewing or traveling.**

③. Each complete action of excavator should be carried out for few times, completing the preheating and ready to work.

## Section III Operational essentials

### 1. Traveling

Use the traveling handles.

(1) Straight

Forwards or backward move the handle, running the machine forwards or backwards.

(2) Steering

A. Left turn in situ: backward shift the left handle and meanwhile forward push the right handle.

b. Right turn in situ: backward shift right handle and meanwhile forward push the left handle.

c. Left turn with left track as axis: forward move the right handle

d. Right turn with right track as axis: forward move the left handle

### 2. Excavation

2.1 The excavator slewing and the work equipment are respectively controlled with two handles, withpositions shown below:

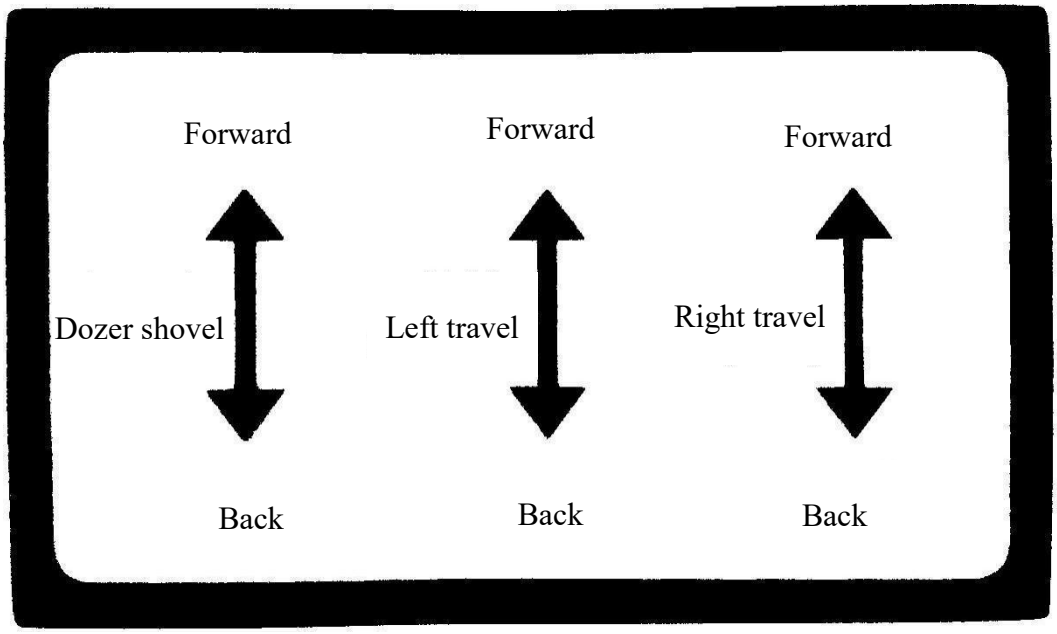

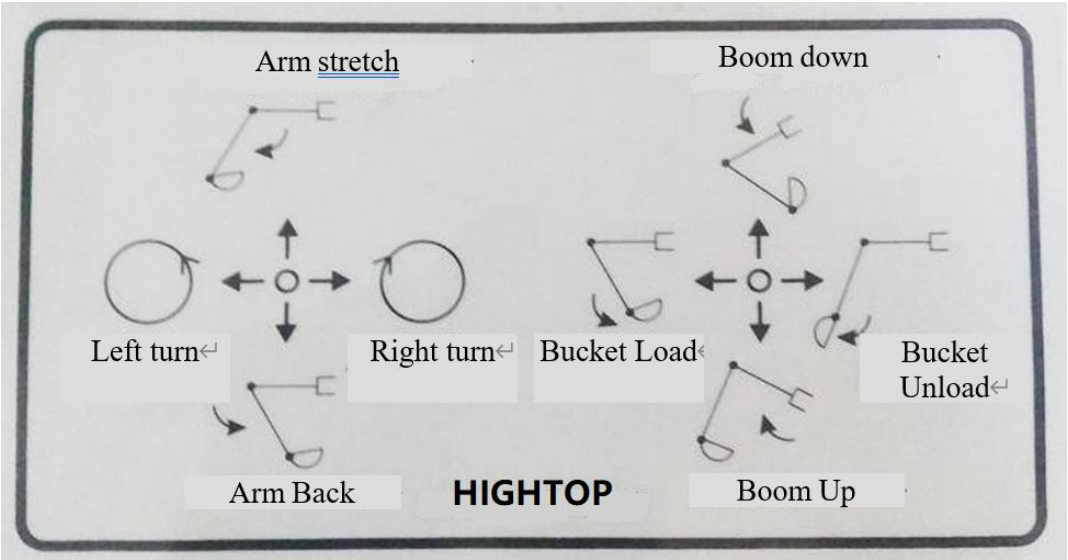


2.2 Basic excavation

1. Before excavation, the arm cylinder should have angle with the arm as 90°, bucket with ground to be excavated as 30°. Only in such case, can each cylinder have the max excavating force. It is suitable for relatively hard soil, so as to decrease the excavating resistance.

2. To excavate any soft soil, bucket should be angled with the soil to be 60°, increasing the work efficiency.

2.3 Lower excavation

Keep the angle between bucket base and the bevel at 30°, and retract the arm to start work.

2.4 Upper excavation

Keep the bucket blade vertical to the ground, and retract the arm to start work.

2.5 Ditching is carried out in 7 steps, as shown in figure.

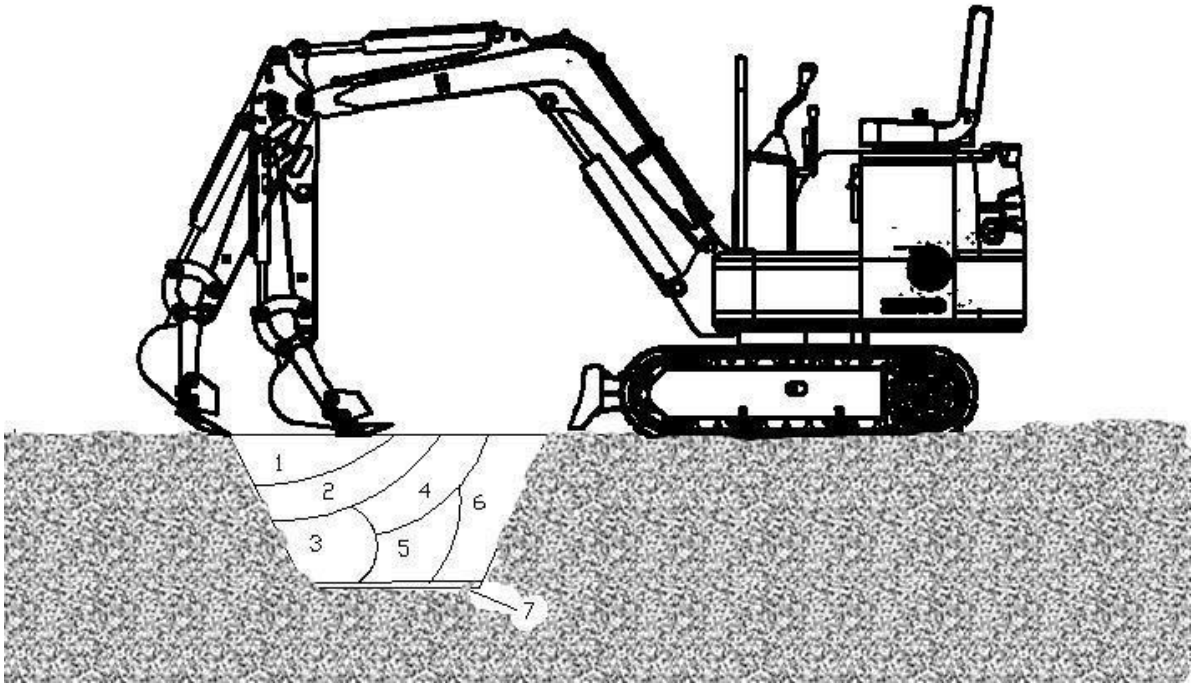

## Section IV Operational Precautions

Prohibitions and precautions for hydraulic excavators

1. Avoid the landsliding and the stone falling.
2. Avoid any striking of work equipment.
3. Avoid the bucket from colliding with other vehicle body, Avoid loaded bucket crossing over other vehicle cab or persons.
4. Avoid the excavator from sinking into soft ground or wetland.
5. In traveling, avoid any large obstacles such as large stone.
6. It is prohibited to work with water depth exceeding the allowable limit.
7. While unloaded or loaded, the large stones should be handled carefully.
8. On cold days, park the machine on solid ground to avoid the track being frozen. Remove any scrap away from track and its frame. If track is iced onto ground, use boom to lift track and carefully move the machine, so as not to damage the sprocket and the track.
9. Before movement of machine, make sure the traveling direction is consistent with its handle. When traveling motor is at rear part, forward push the traveling handle, to drive machine forwards.
10. For long - distance traveling, please rest for 5min at every 20min running, so as not to damage the traveling motor.
11. Never try to cross over slope of more than 15 degree, so as to avoid the machine from overturning.
12. Avoid to occur any accidents during machine reversing or slewing.
13. In work, do not completely dig the soil from out of bottom of machine.
14. Avoid any collapse: never run on high dam or slope, which may let the machine collapsed or sliding away, leading to severe accident.
15. Be careful for underground facilities: unexpected cutoff the underground cables or gas pipe may lead to explosion, fire or even personal casualty.
16. Be careful for overhead facilities such as bridge: if work equipment or other parts collides with over-bridge or others, it may result in personal injury; care must be taken to prevent the boom or the arm from colliding with any elevated item.
17. Keep safe distance from overhead power line: in work around power line, let the part of machine or any load move away from 3m distance of the power insulation. Verify and abide by the local related laws and rules. Wetland may have the range of electric shock enlarged. Therefore, the irrelative person should be kept away from work area.

# Chapter VI Maintenance of H12RExcavators

## Section I Daily inspection and maintenance

| S/N | Item | Quantity | Interval (h) | | Remark |
|---|---|---|---|---|---|
| | | | 10 | 50 | |
| | Check the engine oil level in sump | 1 | ★ | | |
| | Check the hydraulic oil level in hydraulic oil tank | 1 | ★ | | |
| | Check the fuel level in tank | 1 | | ★ | |
| | Check the oil-water separator to completely drain any water or sediment out. | 1 | | ★ | |
| | Check if the fuel pipe is leaked or cracked. | ---- | ★ | | |
| | Check if the fuel pipe is cracked or bent. | ---- | ★ | | |
| | Check the work equipment pivots | ---- | ★ | | |
| | Check if the hydraulic hose and the pipeline leak | ---- | ★ | | |
| | Check if the bucket teeth is worn or loosened. | 4 | | ★ | |
| | Check the seat belt | 1 | ★ | | |
| | Check the bolts and nuts for tightening torque | ---- | | ● | |
| | Check the bolts and nuts for tightening torque | ---- | aperiodically | | |

Note: ★: Maintenance interval under normal conditions

• : Maintenance needed at the first inspection

◆ : Initial 100h

## Section II Periods of overhaul, medium and minor repair

| S/N | Item | Quantity | Interval (h) | | | | | | | | Remark |
|---|---|---|---|---|---|---|---|---|---|---|---|
| | | | 100 | 250 | 500 | 1000 | 1500 | 2000 | 2500 | 4000 | |
| 1 | Greasing of slewing bearing | | | ★ | | | | | | | |
| 2 | Greasing of slewing bearing gears | | ★ | | | | | | | | |
| 3 | Change the engine oil | | ● | ▲ | ★ | | | | | | |
| 4 | Change the hydraulic oil | | | | | | △ | ★ | △ | | |
| 5 | Change the hydraulic oil suction filter elements | | | | | ★ | | | | | |
| 6 | Check if the fuel pipe is cracked or bent | | | ★ | | | | | | | |
| 7 | Change the oil-water separator | | | | ★ | | | | | | |
| 8 | Check the fuel hose for leakage / crack | | | ★ | | | | | | | |
| 9 | Check the fuel hose for crack / leakage | | | ★ | | | | | | | |
| 10 | Change the bucket | | | | | | | | | | |
| 11 | Connection of bucket | | | | | | | | | | |
| 12 | Remove the traveling handle | | | | | | | | | | |
| 13 | Replace the seat belt | | | | | | | | | | |
| 14 | Check the defection of track | | | | ★ | | | | | | |
| 15 | Maintenance of tensioner | | | | ★ ★ | | | | | | |

Note: ★: Maintenance interval under normal conditions

▲: Maintenance interval of engine oil

△: Change interval of hydraulic oil is dependent on the work oil type.

☆: Under the dusty environment, shorten the maintenance interval.

**Technical maintenance**

| A Grease | | | | | | | | | |
|---|---|---|---|---|---|---|---|---|---|
| Parts | | Quantity | Interval (h) | | | | | | |
| | | | 10 | 50 | 100 | 250 | 500 | 1000 | 2000 |
| 1. Lubrication of work equipment pins | Pivot at base of boom<br>Pivot at base of boom cylinder<br>Pivots of bucket and connecting rod | 10 | ★ | | | | | | |
| | Others: | 6 | ★ | | | | | | |
| 2. Lubrication of slewing bearing | | 2 | | | | ★ | | | |
| 3. Lubrication of external meshing gear of slewing bearing | | 1 | | | | | ★ | | |
| Note: it is recommended to use the lithium grease.<br>★ Maintenance interval under normal conditions | | | | | | | | | |

**1. Maintenance and lubrication of work equipment pivots**

- Pivot between bucket and connecting rod

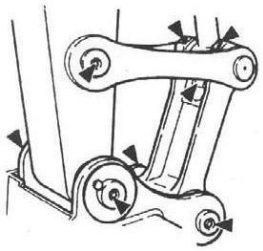

- Pivot at base of boom



- Pivot at base of boom cylinder



● Others

Pivot between boom and arm; pivot of arm cylinder plunger; pivot at base of bucket cylinder.

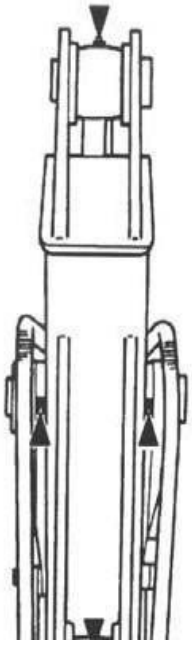

**2. Slewing bearing - every 250h**

1. Park machine on the flat ground.
2. Lower the bucket onto ground.
3. Idle engine at low speed for 5min.
4. Turn the ignition switch to OFF and then take off the key.
5. With the upper-structure standing still, add the grease into the two grease nipples.
6. Start up engine to lift the bucket free from the ground, and then swing the upper-structure by 45 degree(1/8 cycle).
7. Lower the bucket onto ground.

**3. External meshing gear 45 ofslewing bearing------every 500h**

Lower the bucket onto the ground

Turn off the engine.

1. Park machine on the flat ground.
2. Lower the bucket onto ground.
3. Idle engine at low speed for 5min.
4. Turn the ignition switch to OFF and then take off the key.
5. The grease has to be stored on the top of external meshing gear of slewing bearing, free of anypollution.

   Add approximate 0.5kg of grease if needed.

   Any polluted grease should be replaced with new one.



**B. Engine oil**

| Parts | Quantity | Interval (h) | | | | | | |
|---|---|---|---|---|---|---|---|---|
| | | 10 | 50 | 100 | 250 | 500 | 1000 | 2000 |
| Engine oil | 1 | | | ● | ▲ | ★ | | |
| Engine oil filter | 1 | | | ● | ▲ | ★ | | |

According to the temperature range during the interval, select the viscosity of oil listed in the table below:

Recommended engine oil brand: 15W—40 engine oil





Inspection of engine oil level ———each day

Change of engine oil ———every 500 h

Change the engine oil filter ———every 500 h

1. Start up engine to preheat up engine oil properly.
2. Park the vehicle on the flat ground.
3. Lower the bucket onto the ground.
4. Idle engine at low speed for 5min.
5. Turn the ignition switch to OFF and then take off the key.
6. Take off the drain plug to have oil pass through clean cloth into the 2L container.
7. After that, check if there is metal scrap or others left on cloth.
8. Put the drain plug back on and tighten it
9. Loosen the drain plug to have oil flow through the filter cylinder into a container.
10. Take off the screws fixing the engine oil filter elements with a screwdriver to take the filter element out.
11. Reinstall the new filter and tighten the screws fixing the new element with a screwdriver.
12. Remove the oil filter cap to add the recommended oil into engine. After 15 min, check if the oil level is between the circle markers.
13. Put the oil filler cap back on.
14. Shut down engine Unplug the ignition key.
15. Check if the drain plug is leaking.
16. Check the oil level on dipstick.

 **Caution:** keep your body and face away from the breather. When gear oil is still hot, please wait until it cools down and then slowly release the breather pressure!

**C. Hydraulic system**

| **Parts** | | **Quantity** | **Interval (h)** | | | | | | | | |
|---|---|---|---|---|---|---|---|---|---|---|---|
| | | | 10 | 50 | 100 | 250 | 500 | 1000 | 1500 | 2500 | 4000 |
| Check the hydraulic oil level | | 1 | ★ | | | | | | | | |
| Clean the drain pipe of hydraulic oil reservoir | | 1 | | | | ★ | | | | | |
| Change the hydraulic oil | | 16.5L | | | | | | | | ★ | |
| Change the hydraulic oil suction filter elements | | 1 | | | | | | ★ | | | |
| Check the hose and pipeline | -- | ★ | | | | | | | | | |
| | -- | | | | ★ | | | | | | |
| Change the hose | | 39 | | | | | | | | | ★ |
| Note: ★ normal maintenance interval | | | | | | | | | | | |

**Inspection and maintenance of hydraulic system**

 **Caution:** in work, the hydraulic system may become very hot. Please cool the machine down before inspection or maintenance!

1. Before maintenance of hydraulic system, make sure the machine stands on flat and solid ground.
2. Lower the bucket onto ground and shut down engine.
3. Do not start any maintenance until the hydraulic oil and lubricant completely cool down, as the hydraulic system may be still hot and pressurized as soon as work is over.
    a. Drain the air out of hydraulic oil reservoir to release inside pressure.
    b. Cool the machine down.

 **Caution:** inspection and maintenance of hot and pressure parts may cause them or hydraulic oil to spray out, leading to personal injury!

    c. While removing the bolts or nuts, do not have your body facing them, as the hydraulic parts, even if they cools down, they may still have pressure..
    d. Never try to check the traveling or slewing motor circuits on slope, as they may have pressure due to their dead weight.
4. While connecting the hydraulic hoses and pipeline, keep the seal surface free of any dirt and damage. Keep the above mentioned in mind:
    a. Clean the hose, the pipeline and inside of hydraulic oil tank with detergent, and then thoroughly dry them.
    b. Use the O-ring free of any damage or defect.
    c. While connecting the pressure hose, do not twist it; otherwise its service span will be shortened. .
    d. Carefully tighten the low-pressure hose clamp.
5. The hydraulic oil to be added should have the same grade. Namely, do not mix the oil with different grades. The hydraulic oil has been added before delivery, and therefore, please use the recommended oil. All oil in system should be changed at once.
6. With no hydraulic oil, never start up engine.

**I. Inspection of hydraulic oil level --- each day**

**Important:** With no hydraulic oil, never start up engine!

1. Park machine on the flat ground.
2. Completely retract the arm cylinder and extend out the bucket cylinder, so as to locate the machine.
3. Lower the bucket onto the ground.
5. Idle engine at low speed for 5 min.
6. Shut down engine Unplug the ignition key.
8. Check if the oil level in hydraulic oil tank between the markers on dipstick, and add it if needed. . .

**Caution:** Hydraulic oil tank has pressure, therefore slowly open its cap to release pressure before adding of oil.

9. Open the hydraulic oil tank to add oil and then check the oil level again. .
10. Put the cap back on hydraulic oil tank



**III. Change the hydraulic oil ---2000 h**

**Replace the hydraulic oil suction filter element-----every 1000 h**

**Caution:** do not do so until the hydraulic oil cools down as it may be very hot.

1. Park machine on the flat ground.
2. Completely retract the arm cylinder and extend out the bucket cylinder, so as to locate the machine.
3. Lower the bucket onto the ground.
4. Idle engine at low speed for 5min.
5. Shut down engine Unplug the ignition key.
6. Dismantle the covers
7. Clean the top of hydraulic oil reservoir to avoid any dirt into its system.
8. Slowly open the hydraulic oil cap to release the pressure.
9. Loosen and take down the oil-pickup filter element cap.
10. Loosen and take down the drain plug at bottom of hydraulic oil tank to drain the oil out of tank.
11. Take out the oil-pickup filter and the levers.

**Caution:** the hydraulic oil tank has pressure. Slowly open the hydraulic oil cap to release the pressure before taking off the cap!

12. Clean the filter and inside of hydraulic tank.
13. Use oil -pickup pump to suck the oil residue out of bottom of hydraulic oil tank.
14. Put on the filter and the levers to make sure the filter is correctly fixed onto the outlet.
15. Clean and re-install the drain plug onto the bottom of tank.
16. Add the oil until between markers on oil dipstick.
17. Put on the oil-pickup filter element cap to make sure the filter and the levers are at correct position and then tighten the bolts to 49N.m.

**Important:** with no oil in hydraulic pump, starting up of engine may damage to hydraulic pump!

18. Tighten the oil tank cap.
19. With engine idling at low speed, slowly and steadily control the lever for 15min to drain the air out of hydraulic system.
20. Completely retract the arm cylinder and extend out the bucket cylinder, so as to locate the machine.

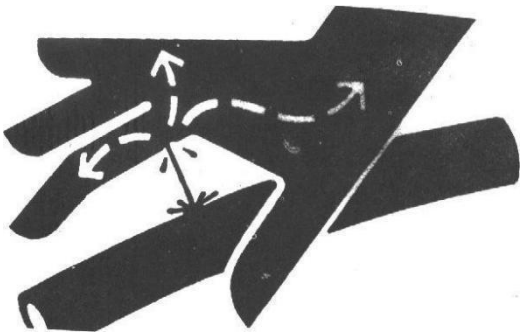

21. Lower the bucket onto the ground.
22. Turn off the engine. Unplug the ignition key.
23. Check the hydraulic oil level in hydraulic oil tank and add it if needed.

**V. Inspection of hose and pipeline**

**--- Each day**

**---every 250 h**

**Caution:** any sprayed fluid could penetrate your skin, leading to personal casualty!

Therefore, use a paperboard to check for leakage.

In addition, care must be taken to keep your hands and body away from pressure oil.

In case of accident, please immediately go to doctor with trauma experience. Any fluid into skin has to be removed in a few hours, which may lead to gangrene.

**Caution:** leaked hydraulic oil and lubricant may lead to fire or personal casualty!

1. Park machine on the flat ground. Lower the bucket onto the ground. Shift the pilot switch to Lock Turn off the engine. Unplug the ignition key.
2. Check if there is lost part, loosened pipe clamps, twisted hose, pipeline or hose rubbing with each other. In case of any abnormal, please replace or tighten it according to table 1-3.
3. Tighten, repair or replace any loosened, damaged or lost pipe clamps, hoses, pipes, oil cooler and flange bolts.

Do not bend or impact any pressure pipeline.

Never install any bent or damaged hose orpipeline.

Caution: related positions of check points and the abnormalities

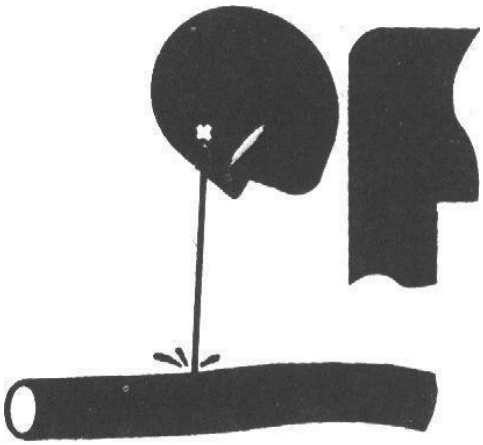

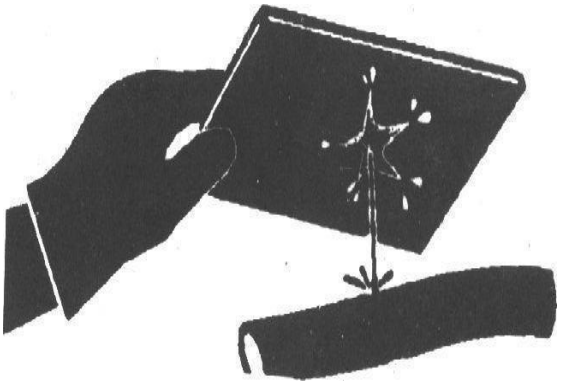

Please use the genuine HIGHTOP excavator parts

| Interval (h) | Check points | Abnormal | Measures |
|---|---|---|---|
| Every day | Hose surface<br>Hose end<br>Connector body | Leakage 1<br>Leakage 2<br>Leakage 3 | Replace it<br>Replace it<br>Tighten or replace the hose or O-ring |
| Every 250h | Hose surface<br>Hose end<br>Hose surface<br>Hose surface<br>Hose<br>Hose<br>Hose end and joint body | Crack 4<br>Crack 5<br>Reinforcing material protruded 6<br>Local part protruded 7<br>Bend 8<br>Bend 9<br>Deformation or corrosion 10 | Replace it<br>Replace it<br>Replace it<br>Replace it<br>Replace it<br>Change it (proper bending radius)<br>Replace it |

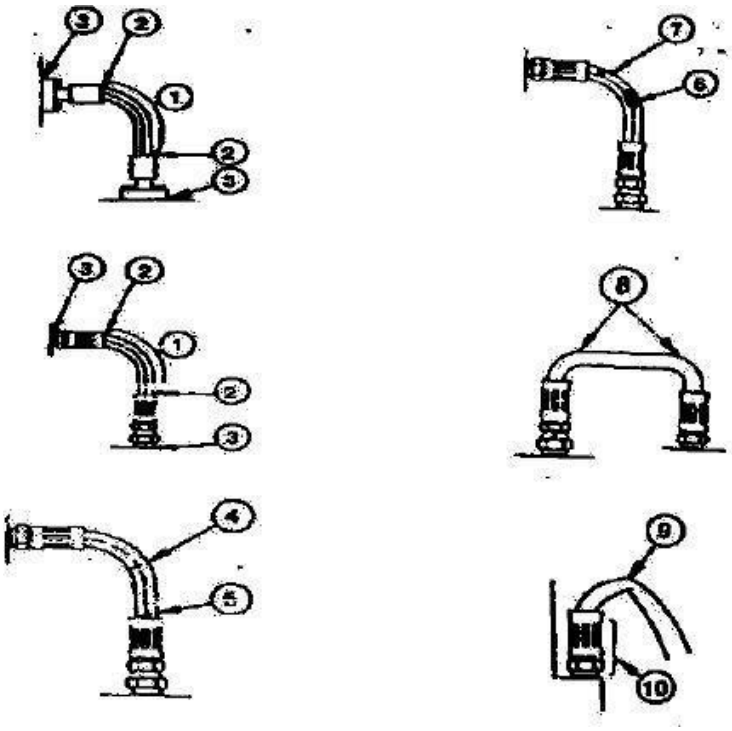

**Fuel system** capacity of fuel tank: 7L

| Parts | | Quantity | Interval (h) | | | | | | |
|---|---|---|---|---|---|---|---|---|---|
| | | | 10 | 50 | 100 | 250 | 500 | 1000 | 2000 |
| Drain dirt out of collector of fuel tank | | 1 | ★ | | | | | | |
| Check the oil-water separator | | 1 | | ★ | | | | | |
| Change the oil-water separator | | 1 | | | | | ★ | | |
| Check the fuel hose. | Leakage | -- | ★ | | | ★ | | | |
| | Crack / twist / others | -- | ★ | | | ★ | | | |
| ★ Maintenance interval under normal conditions | | | | | | | | | |

Recommended fuel:

Merely use the quality diesel (selection of fuel grade should be dependent on environmental temperature).

**Fill up the fuel**

1. Park machine on the flat ground.
2. Lower the bucket onto ground.
4. Idle engine at low speed for 5min.
5. Shut down engine Unplug the ignition key.



**Caution:** fuel should be disposed carefully. Before filling of fuel, turn off engine. No smoking before filling fuel or with fuel system working.

6. Pay attention to the fuel scale. Add the fuel if needed.

**Important:** keep any dirt, dust, water or other foreign material from getting into fuel system!

7. While filling of fuel tank, make sure the fuel is not sprayed on machine and added properly.
8. Put the cap back on fuel filler to avoid any lost or damage.

**Inspection of oil-water separator ---every 200h**

Oil-water separator ① is used to separate the water or sediment from fuel. Oil-water separator ① has a float able to rise up when water becomes full. When there is water or sediment in the collector of oil-water separator, please drain oil-water separator ①.

**Important:** shorten the inspection interval of oil-water separator ① if there is excessive water in the fuel!

Drain steps:

Caution: the drain plug is designed to be counter - thread type and should be turned with hands, instead of vise and wrench for protection of threads.

1. Manually loosen the drain plug at bottom of oil-water separator.

2. After the draining, manually tighten the drain to ensure no leakage of oil or air.

Caution: after the draining, make sure air is drained out of fuel system to make sure the engine could start up normally.

**Electrical system - battery**

I. Check the battery electrolyte level and the terminals.

 **Caution:** gas inside of battery may explode it. Therefore, keep any spark and flame away from battery. Use a flashlight to check the electrolyte level. In addition, the sulphuric acid in battery electrolyte is as toxic as to burn your skin or your cloth holes or to blind your eyes. . .

Therefore, take the following methods to avoid any rick:

1. Refilling of battery should be done at well-ventilated site.
2. Put on goggles and plastic gloves.
3. Care must be taken not to spray out the electrolyte.
4. Use the proper measures to assist battery startup.

If touched with acid:

1. Rinse the skin
2. Use the soda or the lime to neutralize the acid.
3. Rinse eyes for 10 - l5 min and then go to doctor.

 **Caution:**

a. Always firstly disconnect the battery clips (-) away from the ground and then lastly connect it.

b. Always keep the terminals at top to battery and the breather clean, to avoid the battery from discharging. Check if the battery terminal is loosened or rusted. Coat the terminals with vaseline to avoid any corrosion.

**Replace the battery**

There is a 12V battery with one negative pole (-) grounded.

If battery cannot be charged or store any electricity, replace the battery with same model.

**Replace the fuse.**

If the electrical device does not work, please firstly check the fuse.

**Important:** please install the fuse with correct amperage, so as to prevent against burning of electrical system due to overloading!

**Others**

| Parts | Quantity | Interval (h) | | | | | | | |
|---|---|---|---|---|---|---|---|---|---|
| | | 10 | 50 | 100 | 250 | 500 | 1000 | 2000 | 4000 |
| Check if the bucket teeth is worn or loosened. | | ★ | | | | | | | |
| Change the bucket | — | If needed | | | | | | | |
| Replace the bucket and connect the new one to machine. | — | If needed, replace the bucket and connect the new one to machine. | | | | | | | |
| Adjust the connecting rod of bucket | 1 | If needed | | | | | | | |
| Take down the traveling lever | 2 | If needed | | | | | | | |
| Check and replace the fuse | 1 | ★ | Every 3 years | | | | | | |
| Check the track defection | 2 | | | | | ★ | | | |
| Maintenance of tensioner | 2 | | | | | | ★ | | |
| Check the fuel injection timing | — | If needed | | | | | | | |
| Measure the compression pressure of engine | — | | | | | | ⇘ | | |
| Check the starter and the A/C generator | — | | | | | | ⇘ | | |
| Check the bolts and nuts for tightening torque | — | | ℘ | | ★ | | | | |

Note:

★ Maintenance interval under normal conditions

℘ Maintenance needed at the first inspection

⇘ Contact dealers or Rhinoceros.

**Check the bucket teeth --- each day**

1. Check if the bucket teeth is worn or loosened.

   Worn beyond the service limit, the bucket teeth may be replaced.

Bucket tooth dimensions mm

| New | Service limit |
|---|---|
| 190 | 130 |



**Caution:** care must be taken to avoid the metal scrap from flying out, leading to personal injury. Wear the goggles or the safe glasses or safe devices suitable for operations!

**Change the bucket**



**Caution:** while hitting out or into the connecting pin, care must be taken to prevent against any personal injury due to out-flied metal scrap. Wear the goggles or the safe glasses or safe devices suitable for operations!

1. Park the machine on flat ground and lower the flat surface of bucket onto ground to make sure the bucket does not move after the removal of pin.

2. Slide the O-ring out, as shown in the figure.
3. Remove the bucket pins A and B to separate the bucket and the arm. Clean the pin and its pin hole and then properly grease them.
4. Adjust the arm and the new bucket correctly, and make sure the bucket does not roll away..
5. Install the bucket pins A and B.
6. Put the locker and ring onto pins A and B.
7. Adjust the connection clearance of bucket at pin A. Refer to the way to adjust the bucket connection clearance.
8. Grease the pins A and B.
9. Start up engine and run it at low speed. Slowly rotate the bucket to two directions to check if there is any interference to movement of bucket. Do not use any machine with interference, which should be solved immediately. .

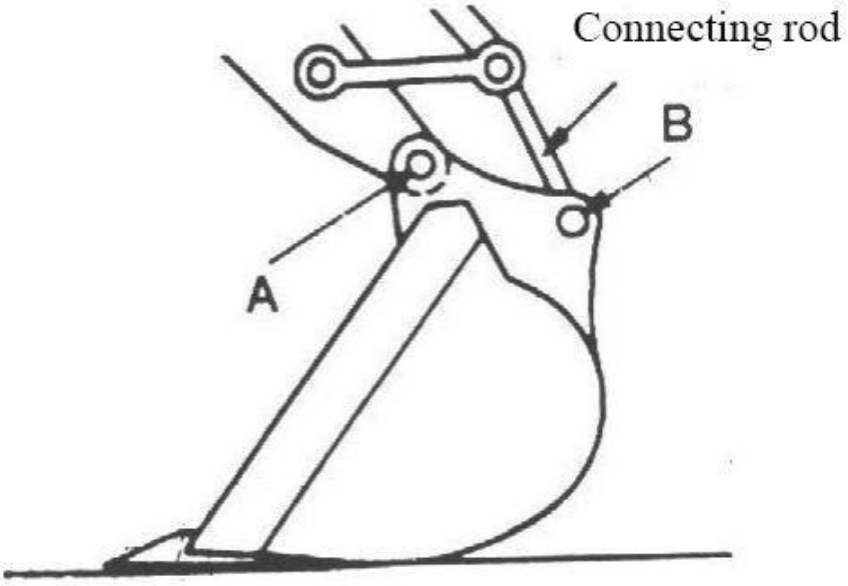

**Check the bolts and nuts for tightening torque**

……every 250 h (initially at 50 h)

Check the tightness at initial 50h and then every 250 h. Tighten it to the set torque if needed. Replace it with bolts and nuts with same or higher grade.

 **Important:** please use the torque wrench to check the torques of bolts and nuts!

| Metric bolts and nuts | | | |
|---|---|---|---|
| Thread dimensions | Standard torque (N.m) | Thread dimensions | Standard torque (N.m) |
| M6 | 12±3 | M14 | 160±30 |
| M8 | 28±7 | M16 | 240±40 |
| M10 | 55±10 | M20 | 460±60 |
| M12 | 100±20 | M30 | 1600±200 |

2. Torque of main components: (N.m)

| Thread dimensions | Recommended torque |
|---|---|
| M16 bolts fixing the traveling motor | 252±39.2 |
| M16 bolts fixing the sprocket | 252±39.2 |
| M20 bolts fixing the slewing bearing | 570±60 |
| M20 bolts fixing the swing mechanism | 570±60 |

 **Important:**

1. Before installed, the bolts and nuts should be cleaned.
2. Grease the bolts and the nuts (such as the white zinc b able to be dissolved to lubricant), so asto stabilize their abrasion coefficient.
3. The counterweight bolts should be kept tightened up.

**Caution:** all the tightening torques should be expressed with kgf.m.

For example: use a wrench with 1m long to tighten the bolts and nuts, and apply 12kgf of force to the end of wrench, generating the following torque:

$$1m \times 12kgf = 12kgf.m$$

To generate the same torque with 0.25m wrench: $0.25m \times y = 12kgf.m$

Needed force: $y = 12kgf.m / 0.25m = 48kgf$

**Maintenance under the special cases**

| Operational conditions | Precautions for maintenance |
|---|---|
| Moor land, rainy or snowy | Before operation, check all the drain plugs are tightened up.<br>After operation, clean machine and check bolts and nuts for break, damage, looseness or loss. Lubricate all parts to be lubricated on time. |
| On beach | Before operation, check all the drain plugs are tightened up.<br>After work, thoroughly clean the clean to remove the salt. Frequently maintain the electrical system from being corroded. |
| Dusty environment | Air filter: clean the filter element periodically or at shorter interval<br>Radiator: clean the oil cooler screen to avoid any blockage.<br>Fuel system: clean the filter and its element periodically or at shorter interval.<br>Electrical devices: periodically clean it, specially the AC generator and starter's rectifier. |
| Stony roads | Track: careful operations Frequently check if bolts and nuts are broken, damaged or lost. Loosen the track a little than the usual.<br>Work equipment: parts may be damaged on stony roads, and therefore please use the reinforced bucket or heavy-duty bucket. . |
| Freezing cold | Fuel: use the high fuel suitable for low temperature<br>Lubricant: hydraulic oil and engine oil with dry quality and low viscosity.<br>Battery: keep the battery fully charged and maintain it at shorter interval. The electrolyte may be frozen if it is not fully charged.<br>Track: keep the track clean. Park the machine on solid ground to avoid the track frozen. |
| Falling stone | Roof at driver seat: add the protective for cab roof if needed to prevent the machine from being damaged with falling stone. |

**Storage of machine**

1. Repair any worn or damaged parts, and put the new one if needed. .
2. Clean the primary air filter elements.
3. If possible, retract all the hydraulic cylinders. If not, grease all the plungers exposed out of cylinder.
4. Lubricate all the grease points.
5. Put the track on the solid and long pad.
6. Cleaning of machine especially in winter, clean each part of excavator, especially the track.
7. Fully charged, the battery should be stored at dry and safe site. If battery cannot be taken down, separate the battery negative pole from (-) pole.
8. Painting if needed to avoid rusting.
9. Store the machine at dry and safe site. If outdoors, it should be covered with water-proof cloth.
10. If machine is to be stored for long time, run it at least once each month.

# Chapter XII Troubleshooting

## Section I General

To ensure excellent performance of H12Rexcavator, high quality Machine's performance and service life are determined not only by manufacturing quality and assembling quality,
but also maintenance quality.

The marketing representative and service engineer shall remind the user that preventive maintenance is the easiest and most economical one among various ways of maintenance.

There are daily inspection and long-, medium- and short-term maintenance according to maintenance frequency.

## Section II Troubleshooting of mechanism system

| Symptom | Possible causes | How to solve |
|---|---|---|
| Noisy structural components | 1. The loose fasteners make noise.<br>2. Aggravated abrasion between bucket and end face of bucket rod | 1. Inspect and tighten<br>2. Adjust the clearance to less than 1mm |
| Bucket teeth have dropped during operation | 1. Deformed spring and weakened elasticity of bucket tooth pin<br>2. Unmatched bucket tooth pin and seat | Change the bucket tooth pin |
| The crawler has tangled up | 1. Loose crawler<br>2. The driving wheel moves fast in front on rugged road. | 1. Tighten the crawler<br>2. The guide wheel shall move slowly in front on rugged road |

## Section III Troubleshooting of hydraulic system

| Symptom | Possible causes | How to solve |
|---|---|---|
| The whole excavator does not move | Low oil level of hydraulic oil tank that the main pump sucks no oil | Add enough hydraulic oil |
| | Oil filter is blocked | Change the filter and clean the system |
| | Engine coupling is damaged (such as plastic plate, elastic plate) | Change |
| | The main pump is damaged | Change or repair the main pump |
| | The servo system pressure is low or zero | Adjust to regular pressure. If it fails to increase the pressure of servo overflow valve, disassemble to wash; if the spring is fatigue, add a washer or change the spring. |
| | The safety valve is set at low pressure or stuck. | Adjust to regular pressure. If it fails to increase the pressure, disassemble and wash. If the spring is fatigued, ass a washer or change the spring. |
| | Oil suction pipe of main pump explodes or comes off | Change with a new one |

| Symptom | Possible causes | How to solve |
|---|---|---|
| The unilateral crawler fails to move | The main pump supplying fuel to unilateral crawler is damaged. | Change |
| | The main valve rod is stuck and the spring is broken | Repair or change |
| | Traveling motor is damaged | Change |
| | The upper and lower chambers of swivel joint are connected | Change the oil seal or clean the assembly |
| | Fuel pipe of traveling system explodes. | Change |
| The whole excavator moves slowly or powerless | Less oil in hydraulic oil tank | Add enough hydraulic oil |
| | Low engine rpm | Adjust engine rpm |
| | Low system safety valve pressure | Adjust to specified pressure |
| | Serious leak inside the main pump | Change or repair the pump |
| | The traveling motor, rotation motor and cylinder are worn of different degree, which causes internal leak. | Change or repair the worn parts |
| | The aged sealing components, worn hydraulic elements, degraded oil of old excavator cause the operation speed becomes powerless along with the increase of temperature. | Change hydraulic oil, change sealing components of the whole machine, adjust the fit clearance and pressure of hydraulic components. |
| | The blocked engine filter causes serious decrease of loaded rpm and even flames out. | Change the element |
| | The blocked hydraulic filter accelerates abrasion of pump, motor and valve and leads to internal leak. | Clean and change the element according to the maintenance schedule. |
| | Serious between main valve rod and valve hole causes serious internal leak | Repair the valve rod |
| The right and left traveling systems do not move (no other abnormalities) | Central rotation connector is damaged. | Change the oil seal and change the groove if it is damaged |
| | The high pressure chamber and low pressure chamber of traveling operation valve is connected. | Change |
| | Serious leak inside the traveling operation valve | Change |
| | Low overloaded pressure of traveling valve of main valve or the valve rod is stuck. | Adjust and grind |
| | The left and right traveling reducers fail | Repair |
| | The left and right traveling motors fail | Repair |
| | The oil pipe explodes | Change |
| Deviation during traveling (no other abnormalities) | Wrong adjustment of variable point of main valve or serious internal leak of a pump | Adjust or repair |
| | Internal or external spring of one traveling valve core of main valve is damaged or tightened | Change |
| | The traveling motor leaks inside due to abrasion. | Repair or change |

| Symptom | Possible causes | How to solve |
|---|---|---|
| | The sealing component of central rotation connector is aged and damaged. | Change the sealing component |
| | The left and right crawlers are of different tightening. | Adjust |
| Boom (bucket rod and bucket) move to one direction only. | Main valve core is stuck or valve rod spring breaks. | Repair or change |
| Boom (bucket rod and bucket) does not move. | Boom valve rod is stuck or of low overloaded pressure | Repair |
| | Fuel supply pipe leaks, detached, O ring damaged or pipe fitting is loose | Change the damaged component |
| | Sandstone in main valve or the low pressure chamber is connected to the high pressure chamber | Change |
| Boom (bucket rod and bucket) drops too quick or the cylinder drops at a certain height even it is not operated due to dead weight | Low overloaded valve pressure | Adjust |
| | Serious internal leak of cylinder | Change the sealing component, repair the inner wall or groove of cylinder or change the cylinder. |
| | Loose oil pipe fitting, damaged O ring | Change |
| Boom (bucket rod and bucket) works powerlessly | Serious internal leak of multi-way valve or sandstone inside it | Change |
| | Low overloaded pressure | Adjust |
| | Serious internal leak of oil cylinder | Change the oil seal |
| | The main valve is disabled due to internal leak. | Repair or change |
| Boom (bucket rod and bucket) moves even it is not operated | multi-way valve core is stuck or serious internal leak | Grind or change |
| | multi-way valve rod spring breaks | Change |
| | Leak of working cylinder, or the working device drops due to dead weight | Change the oil seal |
| | Low pressure of overload overflow valve or the spring breaks | Adjust to specified pressure. Change the spring if it is broken. |
| Hot hydraulic oil | Wrong grade of hydraulic oil for excavator | Change the hydraulic oil |
| | Hydraulic oil cooler surface is polluted by oil and dirt, which blocks the air hole. | Wash |
| | Low oil level of hydraulic oil tank | Add enough hydraulic oil |
| | The hydraulic components such as motor, main valve and oil cylinder or sealing components are seriously worn and cause internal leak, which increases the oil temperature. Traveling rotation and working device are delayed and powerless. The hot temperature degrades the hydraulic oil. The safety valve is of poor air tightness, which leads to overflow. | Change the elements in time |
| No action of rotation (no | Hydraulic oil pipe breaks | Change |

| Symptom | Possible causes | How to solve |
|---|---|---|
| other abnormalities) | Rotary valve rod on main valve is stuck. | Repair |
| | Rotary motor is damaged | Repair or change |
| | The rotation support is damaged. | Change |
| Indifferent left and right rotation speed (no other abnormalities) | The right and left rotation of multi-way valve is of different overloaded pressure | Adjust |
| | Rotation valve rod of multi-way valve is slightly stuck. | |
| Delayed or powered rotation (no other abnormalities) | Serious external leak of hydraulic oil pipe | Change pipe fitting and sealing components |
| | Low overloaded pressure for rotation of multi-way valve | Adjust |
| | Serious internal leak of rotary motor | Repair or change |
| | The high and low pressure chambers of multi-way valve are connected, sand hole on valve body due to casting, which causes one-way action or linked actions | Change |
| | | |
| The rotation mechanism moves even it is operated | Main valve rod spring breaks | Change |
| The excavator makes abnormal noise and shakes during operation. | Low oil level of hydraulic oil tank | Add oil |
| | The oil contains too much moisture and air | Change |
| | Safety valve of multi-way valve makes noise | Adjust |
| | Damaged coupling | Change |
| | Vibration caused by loose pipe clamp | Adjust |
| | Blocked filter | Change |
| | Air exists in oil suction hose | Release the air |
| | Uneven engine rpm | Adjust |
| | The bearing of working device is not lubricated or scraped | Apply lubrication oil or change the shaft or sleeve |
| | | |
| Powerless oil cylinder or oil leak | Damaged sealing components | Change the sealing components |
| | A groove is found on the piston rod due to abrasion or detachment of chromium coating of piston rod, which causes oil leak. | Coat, paint, repair or change |
| | The air in the cylinder causes shaking noise during operation | Release the air |

## Section IV Troubleshooting of electrical control system

| Fault codes of electrical control system of excavator |
|---|
| The engine fails to start |
| The engine flames out during operation |
| The engine fails to flame out |
| Automatic slow-down does not work |
| Slewing and traveling of all working devices. |

Principle diagram

1. The engine fails to start

| Fault description | • The engine fails to start | |
|---|---|---|
| The fuel pump system does not supply fuel or supply less fuel | Low engine rpm | Adjust to regular rpm |
| | Pump fault | Change |
| | Less fuel in the tank | Add fuel |
| | Fuel tube breaks, tube connector is loose and O ring is damaged | Change |

| **Possible causes** | | **Standard value in regular condition and reference value of fault diagnosis** | | |
|---|---|---|---|---|
| 1 | Low battery | Battery voltage | Color of charge state densimeter | |
| | | Above 12V | Green (if it is white, change the battery) | |
| 2 | Fuse F1 and F11 fail | In case the fuse is burnt, the GND fail may happen.<br>If he monitoring indicator on the monitor panel is not illuminated, inspect the circuit between battery and specified fuse. | | |
| 3 | Engine ignition switch fault | ★ Turn the start switch of engine to OFF as preparation and keep it at OFF during diagnosis. | | |
| | | Ignition switch | Position | Resistance |
| | | Between 30 and 17 | OFF | 1MΩ |
| | | | Start | Below 1Ω |
| 4 | Starter relay K3 fault | ★Turn the start switch of engine to OFF as preparation and keep it at OFF during diagnosis. | | |
| | | Pin | | Resistance |
| | | 85-86 | | 200-400Ω |
| | | 87-30 | | Above 1MΩ |
| | | 87a-30 | | Below 1Ω |
| 5 | Security lock switch fault (open circuit inside) | ★Turn the start switch of engine to OFF as preparation and keep it at OFF during diagnosis. | | |
| | | | Lock rod | Resistance |

| Possible causes | | Standard value in regular condition and reference value of fault diagnosis | | |
|---|---|---|---|---|
| | | Between 105 and GND | Unlocked | 1MΩ |
| | | | Locked | Below 1Ω |
| 6 | Start motor fault (open circuit or short circuit inside) | ★Turn the start switch of engine to OFF as preparation and keep it at OFF during diagnosis. If all PS, GND, signals and engine start input are correct while engine start output is abnormal, the engine starter relay fails. | | |
| | | Engine or start motor | Engine start switch | Voltage |
| | | PS; terminal B and GND | Start | 20~30V |
| | | Input of engine start, terminal C and GND | | 20~30V |
| 7 | Alternator fault | ★Turn the start switch of engine to OFF as preparation and keep it at OFF during diagnosis. | | |
| | | | | Voltage |
| | | | | Below 1V |
| 8 | Disconnected wire harness (disconnect from connector or poor contact) | ★Turn the start switch of engine to OFF as preparation and keep it at OFF during diagnosis. | | |
| | | | Resistance | Below 1 |
| | | | | |
| | | | | |
| 9 | Poor GND of wire harness (contact with earth circuit) | ★Turn the start switch of engine to OFF as preparation and keep it at OFF during diagnosis. | | |
| | | | Resistance | Above 1M |
| | | | | |
| | | | | |
| 10 | Short circuit of wire harness (contact with 24V circuit) | ★Turn the start switch of engine to OFF as preparation and keep it at OFF during diagnosis. | | |
| | | Voltage | | Below 1V |

2. Engine flames out during operation

| Symptom | | • Engine flames out during operation | | |
|---|---|---|---|---|
| | Causes | Standard value in regular condition and reference value of fault diagnosis | | |
| | 1 Disconnected wire harness (disconnect from connector or poor contact) | ★Turn the start switch of engine to OFF as preparation and keep it at OFF during diagnosis. | | |
| | | Between CN-12T ② and CN-132F ⑥ | Resistance | Below 1 |
| | 2 Poor GND of wire harness (contact with earth circuit) | ★Turn the start switch of engine to OFF as preparation and keep it at OFF during diagnosis. | | |
| | | Between CN-12T ② and CN-132F ⑥ | Resistance | Above 1M |

## Section V Troubleshooting of diesel engine

### 1. Symptoms of failed startup of engine:

When starting the engine, the starter drives the engine but the engine fails to be started.

Possible causes:

(1) Low battery;

(2) Battery terminal is rusted or loose;

(3) Battery earth wire is rusted or loose or poor GND of engine;

(4) Starter relay armature fails to disengage.

(5) Ignition switch fault or starter fault;

How to solve:

(1) Low battery is caused by electrical appliances that are not powered off in previous day. Next time, do not forget to power off all electrical appliances at the end of the day. If you have well charged the battery during driving the day before, the battery shall be on a full charge at the end of the day. For failed start-up caused by low battery, change the battery pack or connect to another battery pack in parallel to start the engine.

(2) Clean the battery terminal, tighten the PS wire clip to contact the PS wire with battery terminal reliably.

(3) Clean the battery earth wire terminal to ensure reliable GND; ensure reliable GND of engine;

(4) Repair or change starter relay;

(5) Inspect and repair ignition switch and inspect and repair the starter;

(6) Long period operation of battery may increase the internal resistance; therefore, it is necessary to repair the battery and correctly charge the battery and change with new battery pack if necessary; the battery shall be fully charged to ensure successful start-up of engine.

### 2. Check if it is low fuel level that makes hard to start the diesel engine

Symptom:

When starting the engine, the starter runs at acceptable rpm; however, it fails to start the engine.

Possible causes:

(1) Fuel tank is empty;

(2) Fuel supply system channel fault;

(3) Air, water or foreign matter exist in fuel system, which block the system;

(4) Fuel pump fault;

(5) Engine fault;

How to solve:

(1) Fill the fuel tank with standard fuel, start the engine and run the engine to deliver the fuel to carburetor;

(2) Inspect pipeline of fuel supply system, fuel filter and fuel pump; change blocked and damaged assembly if necessary to ensure unobstructed fuel supply.

(3) Release air in fuel system. If the engine can not be started due to air blockage, decrease the temperature properly.

(4) Inspect the fuel pump. Only when the fuel pump works well can the fuel supply be unobstructed. Fuel supply seldom fails and air blockage and water blockage seldom happen when the fuel supply of fuel pump is large.

(5) Inspect and repair the engine. Only when the engine works well can the start-up fail never or seldom happen.

**3. Check if it is hard to start the engine**

Symptom:

(1) Starter runs at correct rpm and drives the engine; however, it is hard to start the engine.

(2) It is hard to start the engine when it is cold.

(3) It is hard to start the engine when it is hot.

Possible causes:

(1) Fuel filter is blocked;

(2) Fuel pump fault;

(3) Wrong injection timing;

(4) Low temperature of oil and intake air;

(5) Intake air filter is blocked.

(6) Leak of fuel tube;

(7) Starter fault;

(8) Improper start operation;

(9) Wrong fuel grade;

(10) Engine fault;

How to solve:

(1) Inspect and change the fuel filter;

(2) Inspect and change the air filter element;

(3) Inspect and adjust the fuel pump;

(4) Inspect the fuel tube and oil channel to ensure unblocked oil supply;

(5) Inspect the starter and start control device for reliable operation.

(6) Start the engine in correct ways.

(7) Add fuel of correct grade and discharge the water in fuel in the low part of fuel tank if necessary;

(8) Repair the engine.

**4. Check if the starter fails to start the engine**

Symptoms:

(1) Turn the ignition switch to ON, the starter does not work.

(2) The driving gears of starter do not engage.

(3) The driving gears of starter fail to disengage.

(4) Low engine rpm and uneven engine rpm;

Possible causes:

(1) The battery is not fully charged.

(2) Terminals of battery are loose.

(3) Battery earth wire is loose.

(4) Start circuit is disabled.

(5) Electromagnetic relay armature is adherent;

(6) Starter fault

(7) Driving gear of starter is stuck by engine flywheel gear ring;

(8) Driving gear of starter adheres to the bearing.

(9) The starter fails to drive the engine;

(10) Engine fault;

How to solve:

(1) Check if the battery is fully charged; if not, charge it; change the battery if necessary.

(2) Connect the battery terminal and connector;

(3) Repair the battery earth wire.

(4) Inspect the start circuit and ensure the terminal of starter shall be live.

(5) Inspect starter electromagnetic relay to eliminate fault of electromagnetic relay; it shall obvious to hear the sound making by the relay when it sucks and separates.

(6) Inspect and repair the starter.

(7) Start again to engage the starter driving gear and engine flywheel gear.

(8) Inspect the bearing on the end of starting shaft of starter;

(9) Small torque of starter, change the starter if necessary.

(10) Repair the engine to ensure sound operation ofengine.

Attachment: BOM of vehicle parts

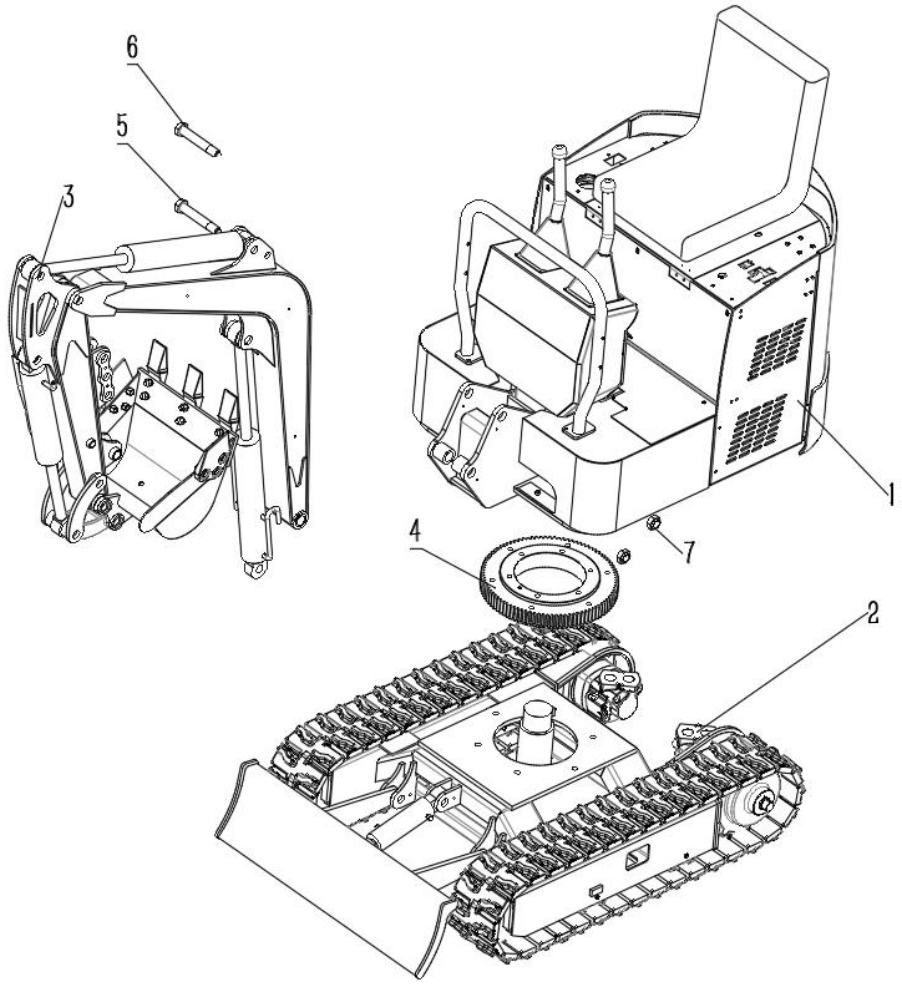


| Exploded drawing of 1 . 0 T excavator assembly | | | |
|---|---|---|---|
| S/N | Name | Quantity | Remark |
| 1 | Upper frame assembly | 1 | |
| 2 | Lower frame assembly | 1 | |
| 3 | Front work equipment assembly | 1 | |
| 4 | Slewing bearing assembly | 1 | |
| 5 | Connecting shaft between boom and upper frame | 1 | |
| 6 | Connecting shaft between boom and upper frame | 1 | |
| 7 | Pivot sleeve | 2 | |

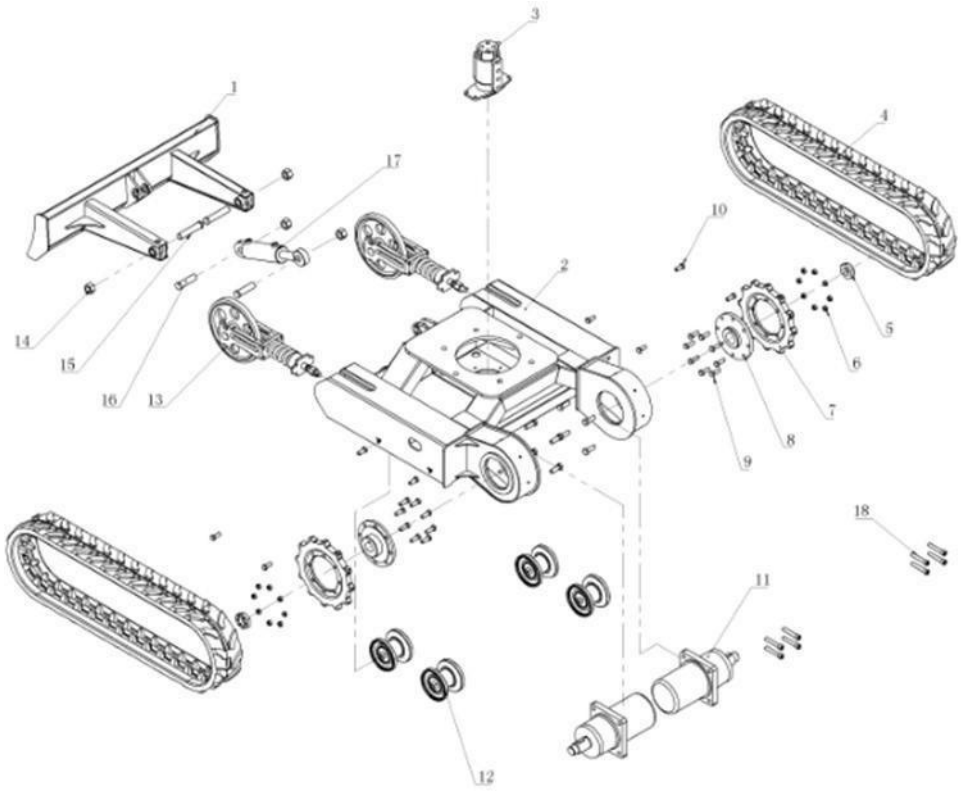


| 1 Lower frame | | | | |
|---|---|---|---|---|
| S/N | Part No. | Part Name | Quantity | Remark |
| 1 | 1.1 | Welded dozer shovel | 1 | |
| 2 | 1.2 | Welded lower frame | 1 | |
| 3 | 1.3 | Slewing joint | 1 | |
| 4 | 1.4 | Rubber crawler | 2 | |
| 5 | 1.5 | Lock nut | 2 | |
| 6 | 1.6 | Sprocket nuts | 16 | |
| 7 | 1.7 | Drive wheel | 2 | |
| 8 | 1.8 | Connecting disc | 2 | |
| 9 | 1.9 | Sprocket bolts | 16 | |
| 10 | 1.10 | Bolts fixing the track roller | 8 | |
| 11 | 1.11 | Traveling motor | 2 | |
| 12 | 1.12 | Track roller | 4 | |
| 13 | 1.13 | Idler assembly | 2 | |
| 14 | 1.14 | Pivot nuts | 4 | |
| 15 | 1.15 | Connecting shaft of dozer shovel | 2 | |
| 16 | 1.16 | Connecting shaft of cylinder | 2 | |
| 17 | 1.17 | Cylinder of dozer shovel | 1 | |
| 18 | 1.18 | Bolts fixing idler assembly | 8 | |

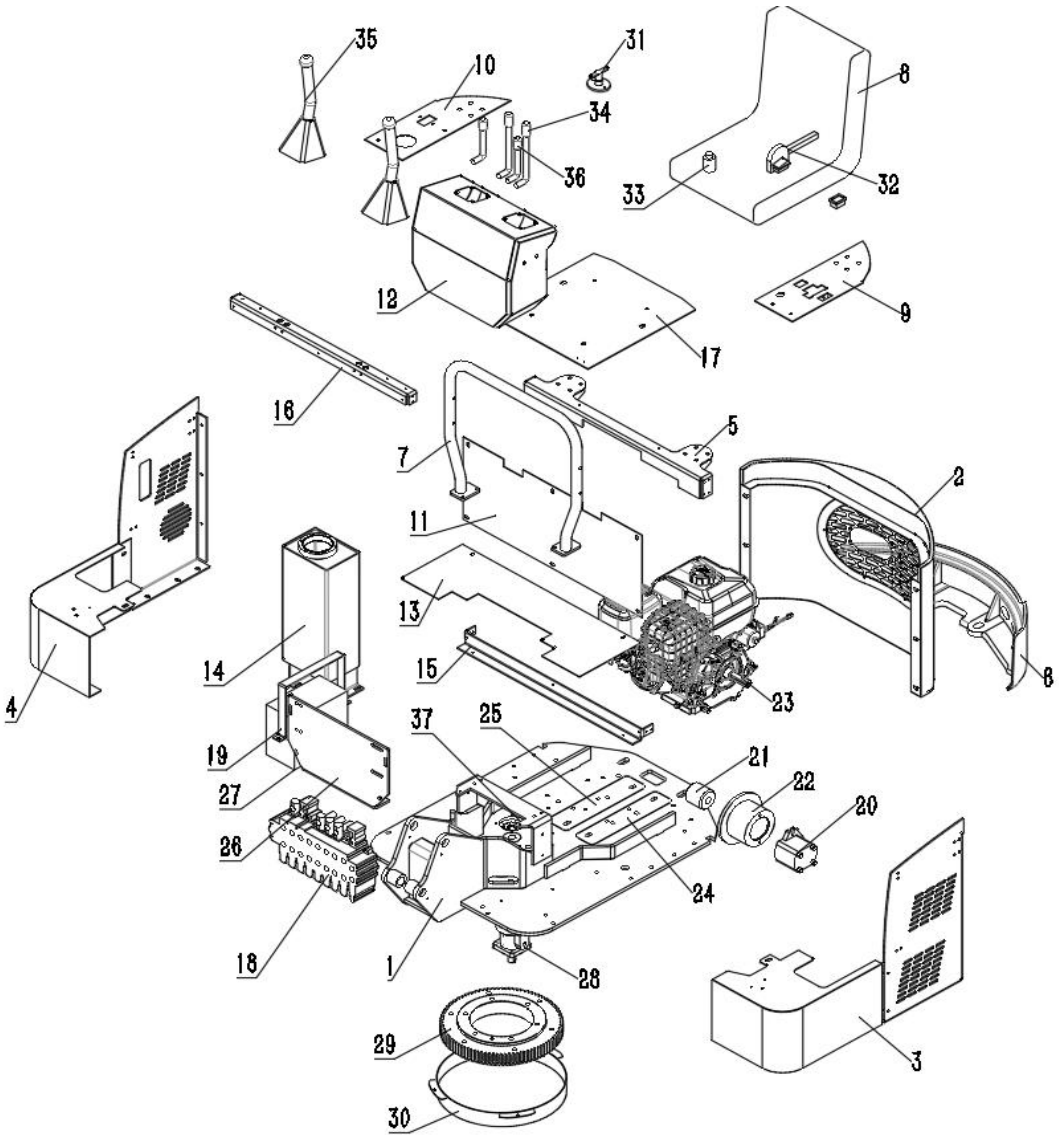


| 2 Upper frame assembly | | | | |
|---|---|---|---|---|
| S/N | Part No. | Part Name | Quantity | Remark |
| 1 | 2.1 | Welded upper frame | 1 | |
| 2 | 2.2 | Covers of rear housing | 1 | |
| 3 | 2.3 | Covers of left housing | 1 | |
| 4 | 2.4 | Covers of right housing | 1 | |
| 5 | 2.5 | Welded inside support frame | 1 | |
| 6 | 2.6 | Rear counterweight plate | 1 set | |
| 7 | 2.7 | Handrail | 1 | |
| 8 | 2.8 | The seat | 1 | |

| 2 Upper frame assembly | | | | |
|---|---|---|---|---|
| S/N | Part No. | Part Name | Quantity | Remark |
| 9 | 2.9 | Left- upper cover | 1 | |
| 10 | 2.10 | Right - upper cover | 1 | |
| 11 | 2.11 | L- shaped covers | 1 | |
| 12 | 2.12 | Console | 1 | |
| 13 | 2.13 | Pedal | 1 | |
| 14 | 2.14 | Hydraulic oil tank | 1 | |
| 15 | 2.15 | The front of the bracket A | 1 | |
| 16 | 2.16 | The front of the bracket B | 1 | |
| 17 | 2.17 | The seat plate | 1 | |
| 18 | 2.18 | multi-way valve | 1 | |
| 19 | 2.19 | Battery platen | 1 | |
| 20 | 2.20 | Master cylinder | 1 | |
| 21 | 2.21 | Coupler | 1 | |
| 22 | 2.22 | Pump disc | 1 | |
| 23 | 2.23 | Engine | 1 | |
| 24 | 2.24 | Rear bracket base of engine | 1 | |
| 25 | 2.25 | Front bracket base of engine | 1 | |
| 26 | 2.26 | Main valve holder | 1 | |
| 27 | 2.27 | Battery | 1 | |
| 28 | 2.28 | Rotary motor | 1 | |
| 29 | 2.29 | Slewing bearing | 1 | |
| 30 | 2.30 | Dust cover | 1 | |
| 31 | 2.31 | Main power switch | 1 | |
| 32 | 2.32 | Manual accelerator | 1 | |
| 33 | 2.33 | Key starter | 1 | |
| 34 | 2.34 | Traveling handle | 2 | |
| 35 | 2.35 | Work handle | 2 | |
| 36 | 2.36 | Front shovel handle | 1 | |
| 37 | 2.37 | Slewing joint pallet | 1 | |

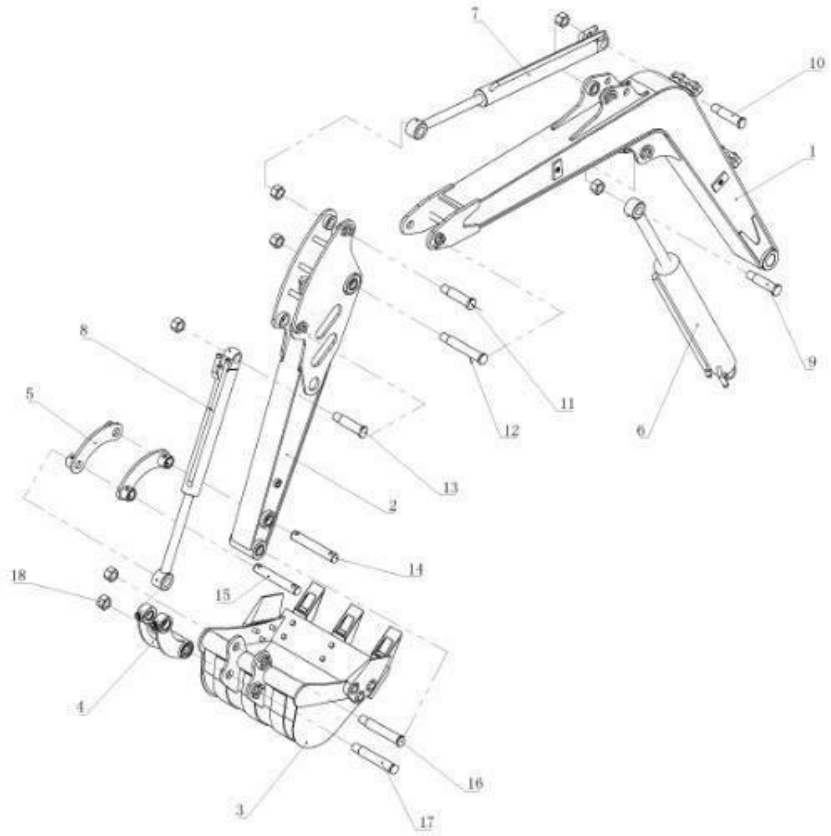


| 3. Front work equipment | | | | |
|---|---|---|---|---|
| S/N | Part No. | Part Name | Quantity | Remark |
| 1 | 3.1 | Boom | 1 | |
| 2 | 3.2 | Arm | 1 | |
| 3 | 3.3 | Bucket | 1 | |
| 4 | 3.4 | Connecting rod | 1 | |
| 5 | 3.5 | Push rod | 1 | |
| 6 | 3.6 | Boom cylinder | 1 | |
| 7 | 3.7 | Arm cylinder | 1 | |
| 8 | 3.8 | Bucket cylinder | 1 | |
| 9 | 3.9 | Medium shaft of boom | 1 | |
| 10 | 3.10 | Rear shaft of arm cylinder | 1 | |
| 11 | 3.11 | Front shaft of arm cylinder | 1 | |
| 12 | 3.12 | Front shaft of boom | 1 | |
| 13 | 3.13 | Rear shaft of bucket cylinder | 1 | |
| 14 | 3.14 | Medium shaft of arm | 1 | |
| 15 | 3.15 | Front shaft of bucket cylinder | 1 | |
| 16 | 3.16 | Front shaft of arm | 1 | |
| 17 | 3.17 | Connecting shaft between bucket and connecting rod | 1 | |
| 18 | 3.18 | Shaft locker sleeve | 7 | |

VERSION.2021